Standard Swinging Screen for Rectangle and Arch Top Inswing French Doors

Installation Instructions

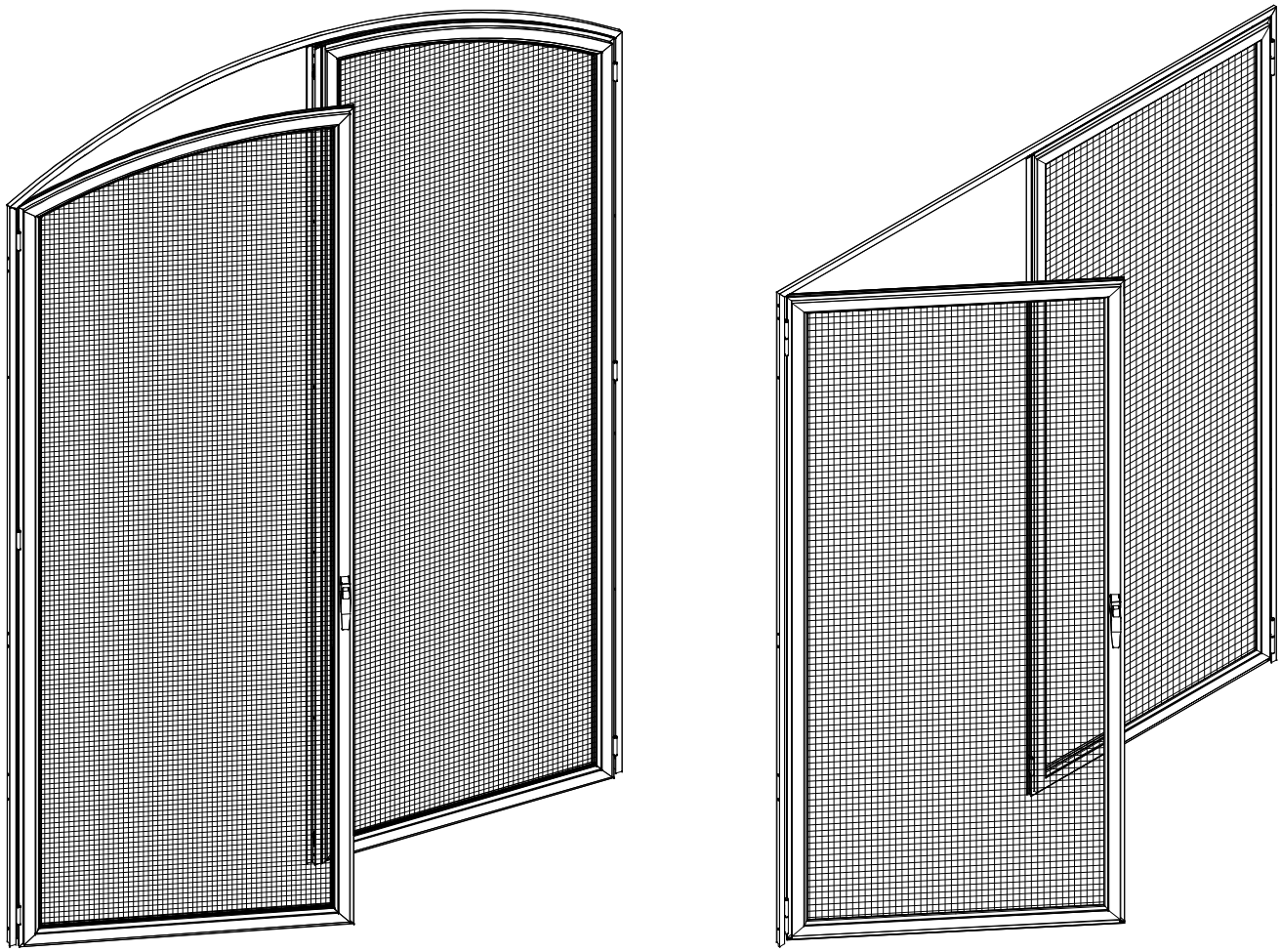

MARVIN®
Windows and Doors
Built around you.®

19970118
2013-11-07

For wood and clad Ultimate Inswing French doors built after February 28, 2011:

If the IFD / UIFD configuration consists of any **stationary panels or sidelights**, your order will need to request a swinging screen mull casing. One swinging screen mull casing will be required for each stationary panel your screen will contact, e.g., an OXXO or OXO will need two screen mull casings, an OX would need one.

Please see diagram below for screen mull casing:

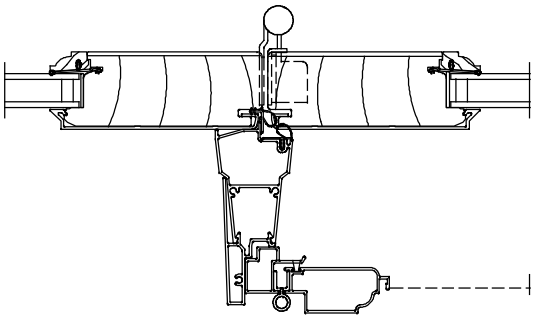

Clad Inswing French Door
Stationary Mull Post Detail

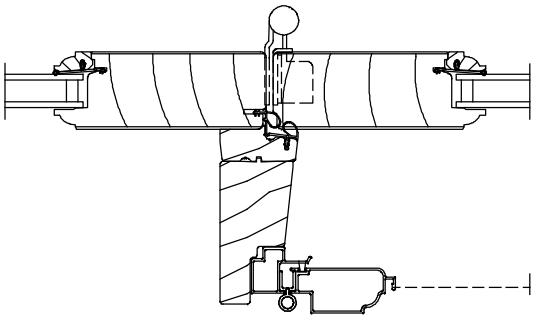

Wood Inswing French Door
Stationary Mull Post Detail

For wood and clad Inswing and Ultimate Inswing French doors built after May 3, 1998 and prior to February 28th, 2011:

If the IFD / UIFD configuration consists of any **stationary panels or sidelights**, your order will need to request a swinging screen mull casing. One swinging screen mull casing will be required for each stationary panel your screen will contact, e.g., an OXXO or OXO will need two screen mull casings, an OX would need one.

Please see diagram below for screen mull casing.

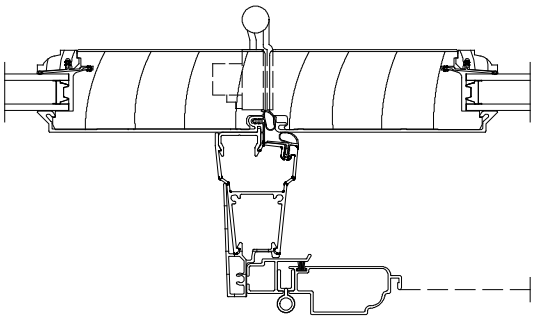

Clad Inswing French Door
Stationary Mull Post Detail

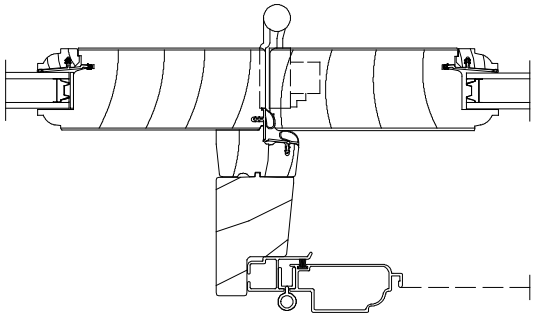

Wood Inswing French Door
Stationary Mull Post Detail

BEFORE YOU BEGIN

Important! Read these instructions thoroughly before beginning to install your hinged screen for the Inswing French Door. Failure to install as recommended will void any warranty, written or implied. Regional applications and standards may vary, therefore Marvin Windows and Doors is not responsible for interpretations of local codes and/or ordinances. Installation of Marvin products is the sole responsibility of the installer, contractor, structural engineer, architect, building owner and/or consumer. After installation is completed, these instructions should be retained by the building owner. For additional information, consult your local Marvin Windows and Doors dealer.

IMPORTANT: Do not allow strong detergents, solvents, chemicals or other harsh cleaning substances to come in contact with aluminum surfaces as they can cause damage. Remove fresh paint splashes, grease or caulking with naphtha or isopropyl alcohol. If you wish to maintain the finish, wash with soap and water.

WARNING: Practice safety! Wear safety glasses or goggles and appropriate hearing protection when installing or performing adjustments to a Marvin window or door product.

One door package will be provided per swinging panel. Appropriate accessory packages and closer/latch handle kits will be supplied in accordance with door configurations.

Before beginning installation, make sure you have all the necessary parts and tools.

STANDARD PARTS SHIPPED WITH UNIT

Door package contains:

6′ 5″	6′ 8″	7′ 0″	8′ 0″	Door Height
1	1	1	1	Hinged screen door
1	1	1	1	Sill sweep
2	2	2	2	#6 x 1/2″ screw (sill sweep to door)
2	2	2	3	Hinge leaf
2	2	2	3	Hinge pin

Accessory package for a single operating panel contains:

6′ 5″	6′ 8″	7′ 0″	8′ 0″	Door Height
1	1	1	1	Z- bar top rail
2	2	2	2	Z- bar side stile
21	21	21	21	#6 x 1 1/4″ screw (Z- bar to door frame)
18	18	18	18	#6 x 1″ screw (Z- bar to mull cap)
1	1	1	1	Instruction booklet
1	1	1	1	Closer/Latch handle kit (see separate parts list)
1	1	1	1	Two way strike plate

Accessory package for Double Operating Panels includes:

6′ 5″	6′ 8″	7′ 0″	8′ 0″	Door Height
1	1	1	1	Z- bar top rail
2	2	2	2	Z- bar side stile
22	22	22	22	#6 x 1 1/4″ screw (Z- bar to door frame) (astragal to door)
18	18	18	18	#6 x 1″ screw (Z- bar to mull cap)
1	1	1	1	Astragal with flush bolts
2	2	2	2	Cover plate
1	1	1	1	Strike plate
2	2	2	2	#6 x 3/8″ screw, black (strike plate to astragal)
1	1	1	1	Instruction booklet
1	1	1	1	Closer/Latch handle kit (see separate parts list)
1	1	1	1	Astragal bottom end seal

REPLACEMENT PARTS

If replacement parts are needed, please contact your local Marvin Windows and Doors dealer.

Closer/Latch handle kit contains:

Closer Parts

Quantity	Description
1	Closer assembly
1	Hold open washer
1	Jamb bracket
3 or 4	Rectangle screen - #10 x 7/8″ screw (head jamb bracket attachment) or Arch Top screen - #10 x 1″ screw (jamb bracket attachment)
1	Door bracket
2	#10 x 1/2″ or #10 x 5/8″screw (door bracket to screen door)
1	Door bracket connecting pin (closer cylinder to door bracket)
1 or 1	Rectangle screen head jamb bracket using bushing (closer rod to jamb bracket) or Arch Top screen jamb bracket connecting pin (closer rod to jamb bracket)

Latch Handle Parts

Quantity	Description
1	Outside handle
1	Outside handle thumb button
1	Inside latch handle #2
1	Unkeyed steel spindle
1	Spindle spring
2	#6 x 1 3/8″ screw (handle attachment)

NOTE: For questions regarding the hardware please call 1- 877- 560- 6100.

INDEX

Page

Z- Bar installation 3
Hanging the screen door 3
Apply the astragal 3
Passive panel latch strike plate 4
Jamb or mull casing latch strike plate 4
Latch passive screen panel 5
Assemble and install the latch set 5
Rectangle screen door closer installation 5
Arch Top screen door closer installation 5
Sill sweep installation 6

YOU WILL NEED TO SUPPLY

Safety glasses
Electric drill with 7/64″ (#35) drill bit
Phillips #2 (medium) screwdriver
1/8″ drill bit
Tape measure
Pencil
Power miter saw w/carbide blade for cutting aluminum

CAUTION: If using a power drill to install screws; use extreme caution. Hand torque all screws, Do not "bottom out" with power driver.

Z- BAR INSTALLATION

1. Locate the Z- bar top rail (miter cut on on one end, straight cut on the other), Z- bar side stiles (miter cut on top, straight cut with notch on the bottom), and #6 x 1 1/4″ screws.
2. At the head jamb of the door unit, measure the space between the side jambs and cut a 45 degree miter on the Z- bar top rail with the miter saw. See illustration 1.
3. Position the Z- bar top rail along door head jamb and center left to right in the opening. Using small holes in the Z- bar as a template, drill a 7/64″ hole near center. Install one of the #6 x 1 1/4″ screws in this hole. See illustration 1.

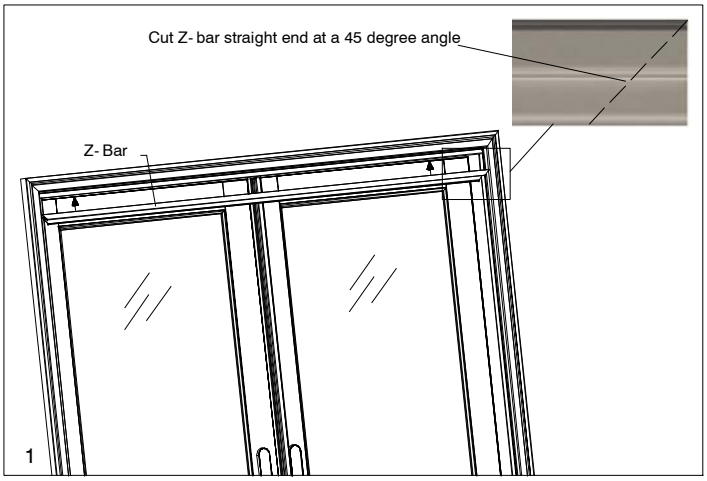

NOTE: Z- bar location is next to the part stop on 6 9/16″ (167) and 4 9/16″ (126) jamb units.

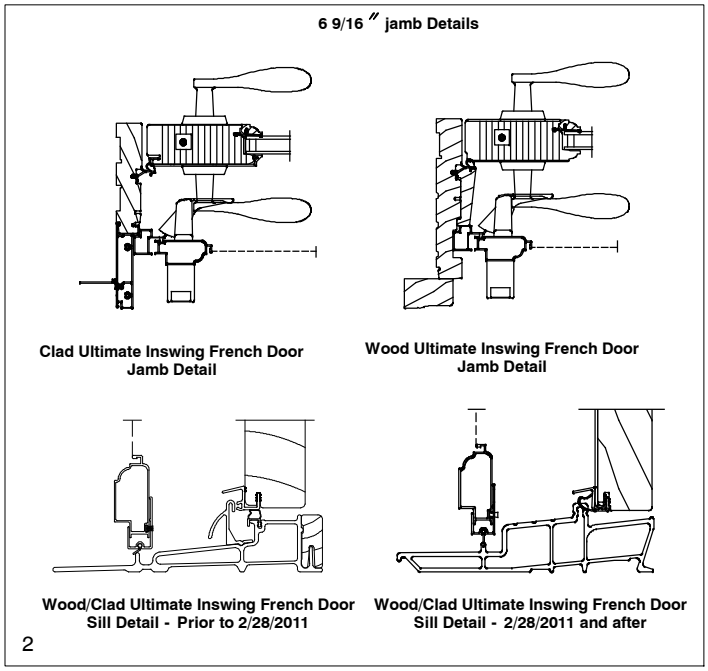

4. Drill remaining small holes through top rail Z- bar and install #6 x 1 1/4″ screws.
5. Position Z- bar side stiles along door side jambs, pushing up to keep a tight mitered corner. Use same fastening procedure as on Z- bar top rail starting at the top hole. Do not install screws in the double sets of holes, these are for hinges.

NOTE: When attaching Z- bar side stiles to a mull cap instead of side jamb, use #6 x 1″ screws instead of #6 x 1 1/4″ screws.

6. Select the direction that screen door will open - left or right for single doors, active or passive for double doors. See illustrations 3.

NOTE: The plastic spline in screen door faces the exterior.

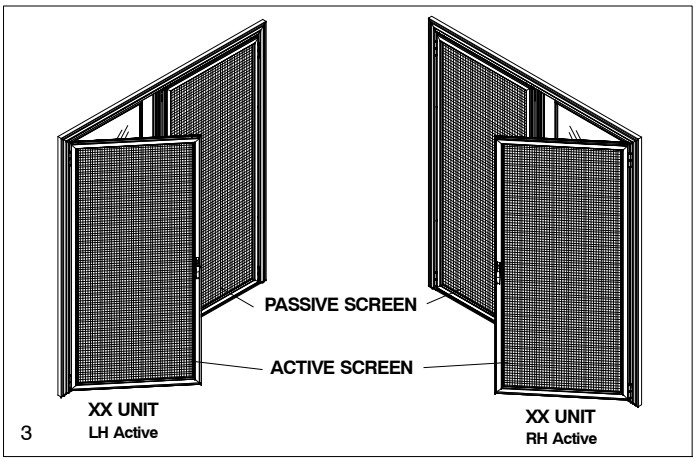

7. Align hinge leaf holes with the double holes in the Z- bar.
8. Attach all hinge leaves to the Z- bar using the #6 x 1 1/4″ screws, pulling the hinge leaf toward the exterior as they are tightened down. See illustration 4.

NOTE: When attaching the hinge leaves to a mull cap instead of a side jamb, use #6 x 1″ screws.

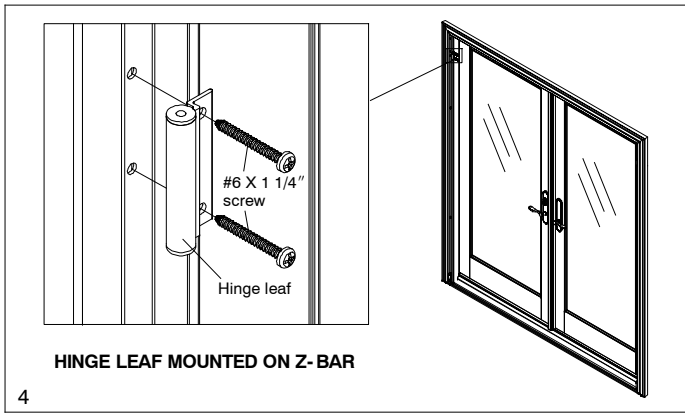

HANGING THE SCREEN DOOR(S)

9. Position screen door into door frame.
10. Starting at the top of the door, align upper hinge leaf over lower hinge leaf and insert hinge pin. See illustration 5.

NOTE: When installing in 6 9/16″ units, the top hinge pin must be partially inserted before aligning hinge leaves.

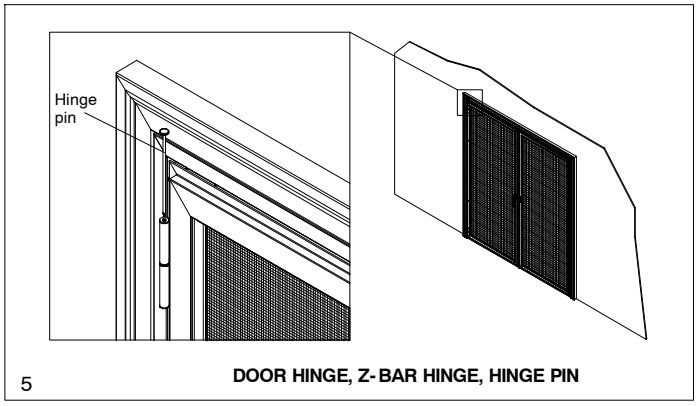

11. Working downward, repeat above procedure for remaining hinges.
12. Repeat Steps 9- 11 for double screen doors.

NOTE: 6- 5 and 6- 8 height units are a universal screen door, 7- 0 and 8- 0 height units require a RH and LH screen door.

NOTE: For mull casing or jamb locking screen door installations, skip to Step #25 for latch set installation. For passive panel locking screen installations, continue below for the astragal installation.

APPLY THE ASTRAGAL (XX Units Only)

13. Determine the passive screen - it is in front of the door's passive panel.
14. Place astragal tight over the edge of passive screen meeting stile, flush with top and bottom of screen panel.
15. Using astragal as a template, drill 7/64″ holes in meeting stile edge of panel.
16. Install #6 x 1 1/4″ screws into drilled holes using caution not to over tighten. See illustration 6.

ASTRAGAL MOUNTED TO PASSIVE SCREEN

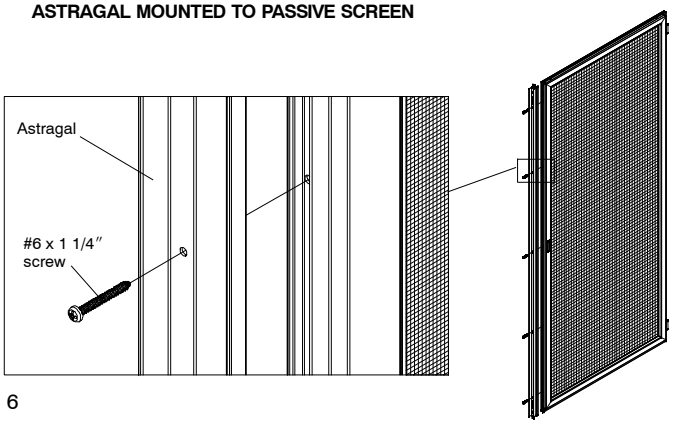

6

17. Determine which face of astragal will be the bottom interior side.
18. Peel release liner off adhesive portion on astragal bottom end seal.
19. Carefully center astragal bottom end seal side to side and line up the flexible and rigid portions with bottom of astragal.
20. Apply pressure to astragal bottom end seal over adhesive portion to complete bond. See illustration 7.

ASTRAGAL BOTTOM END SEAL

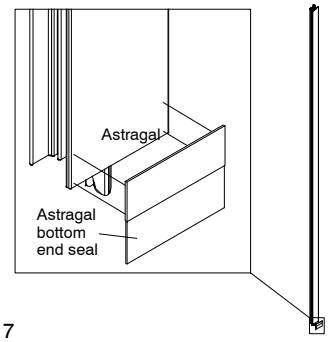

7

PASSIVE PANEL LATCH STRIKE PLATE

21. For 6-5 and 6-8 height XX units, position strike plate and align slotted holes with holes on inside face of astragal. See illustration 8.
22. For 7-0 and 8-0 height XX units, position strike plate and line up with adjacent three holes in passive screen, while pushing strike plate tight against edge of astragal. Drill two 7/64″ holes at the end of slots nearest astragal edge. See illustration 9.
23. Insert two black-headed #6 x 3/8″ screws in slots and lightly tighten so strike plate can still be moved. See illustration 8.
24. Adjust strike plate horizontally to get proper latching fit and tighten screws. See illustrations 8 and 9.

6-5 AND 6-8 STRIKE PLATE INSTALLATION

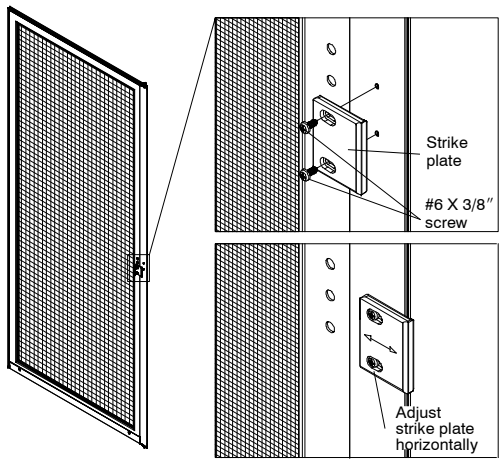

8

7-0 AND 8-0 STRIKE PLATE INSTALLATION

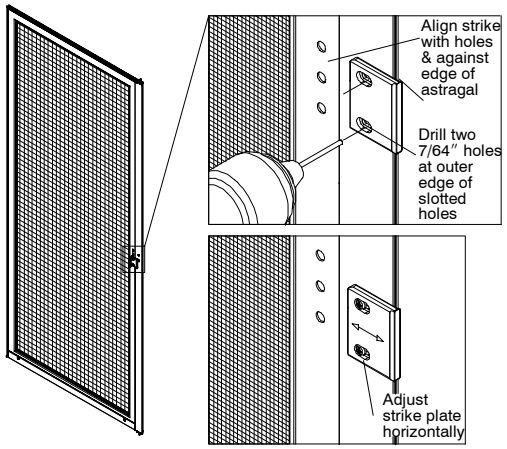

9

JAMB OR MULL CASING LATCH STRIKE PLATE

25. From interior side of installed screen temporarily mark latch location on Z-bar with a pencil.
26. Hold screen open with closer stop. Position strike on Z-bar as shown in illustration 10 centered on mark from previous step.
27. Locate and mark the center of attaching screw slots. Drill 1/8″ (3) pilot holes and attach strike with #6 x 3/8″ pan head screws provided.
28. Check latch to ensure proper operation. Adjust strike as needed.

INTERIOR VIEW - Arch Top shown

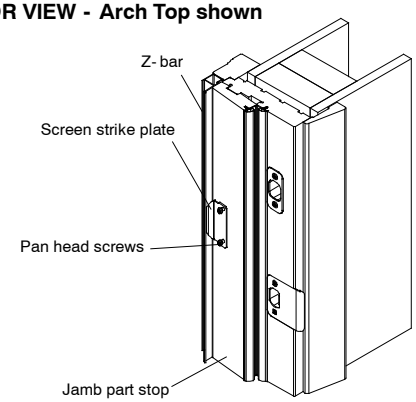

10

LATCH PASSIVE SCREEN PANEL (XX Units Only)

29. Close passive screen panel.
30. Extend flush bolts located on edge of astragal on each end by pushing in and up or down (reverse the procedure to unlatch). See illustration 11. Bottom bolt slot fits over the ridge on the sill.

FLUSH BOLT ENGAGEMENT - TOP BOLT SHOWN

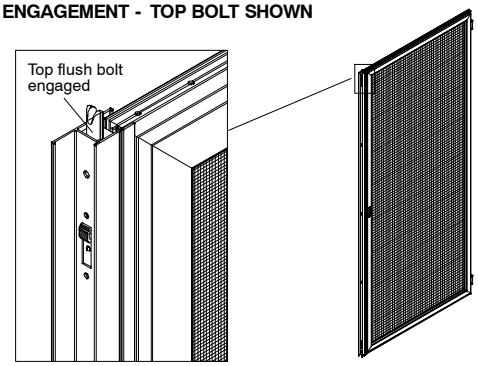

11

ASSEMBLE AND INSTALL THE LATCH SET

31. Install latch set on the active panel.
32. Assemble latch set components into the three pre- drilled latch holes on door stile.
33. Secure with #6 x 1 3/8″ screws. Do not over tighten. See illustration 12.

EXPLODED PICTURE OF LATCH SET INSTALLATION

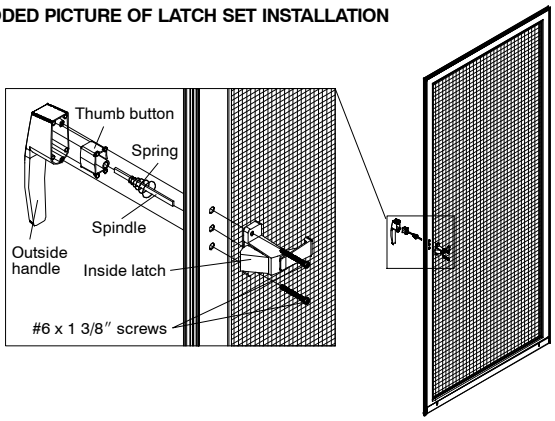

12

RECTANGLE SCREEN DOOR CLOSER INSTALLATION

NOTE: For Arch Top screen go to step 43.

34. Position head jamb bracket in upper inside corner of door frame against side jamb and 3/8″ (10) from face of door.
35. Mark and drill three 1/8″ holes.
36. Attach head jamb bracket with #10 x 7/8″ screws. See illustration 13.

INSTALLED HEAD JAMB BRACKET - RECTANGLE SCREEN

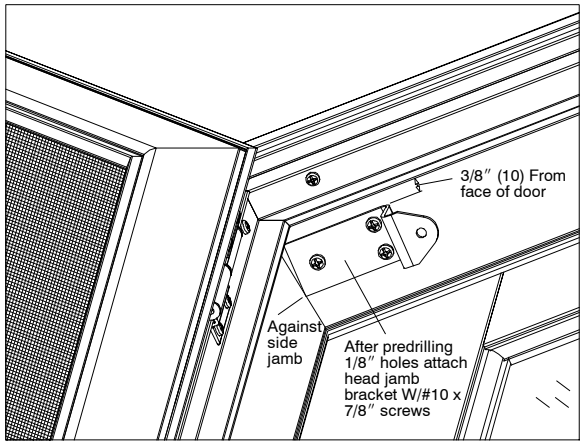

13

37. Place hold- open- washer on closer rod and position over lugs. This will give proper tension for installation. See illustration 14.

HOLD OPEN WASHER ON CLOSER ROD

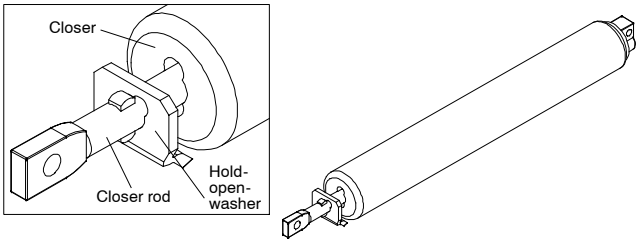

14 **CLOSER ASSEMBLY**

38. Close and latch the door.
39. Attach door bracket to closer assembly using door bracket connecting pin. See illustration 15.
40. Attach closer to head jamb bracket with split connecting pin. See illustration 15.

DOOR BRACKET ATTACHMENT - RECTANGLE SCREEN

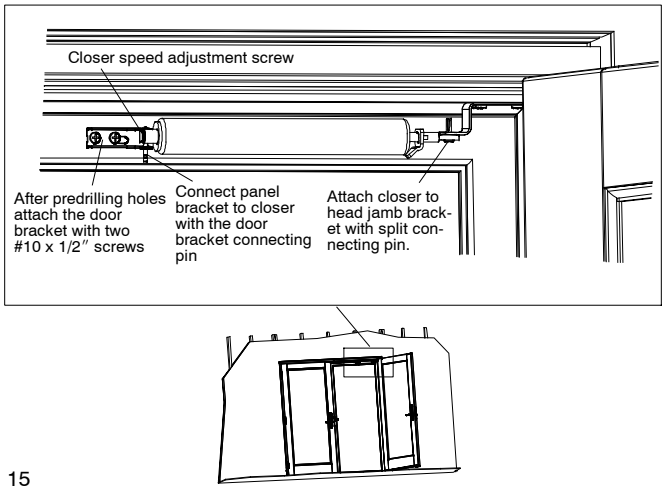

15

41. Hold closer assembly and door bracket in a level position. Mark and drill 1/8″ hole in end of slot opposite cylinder. (**Use caution <u>not to</u> drill through both sides of screen panel).**
42. Attach door bracket with one #10 x 1/2″ screw in the adjustment slot.

NOTE: Go to Adjust Closing Tension step 52.

ARCH TOP SCREEN DOOR CLOSER INSTALLATION

43. Position jamb bracket in lower inside corner of door frame on the side jamb 1 1/4″ (32) above the sill and 1 1/8″ (29) from the face of door .
44. Mark and drill four 1/8″ holes.
45. Attach jamb bracket with #10 x 1″ screws. See illustration 16.

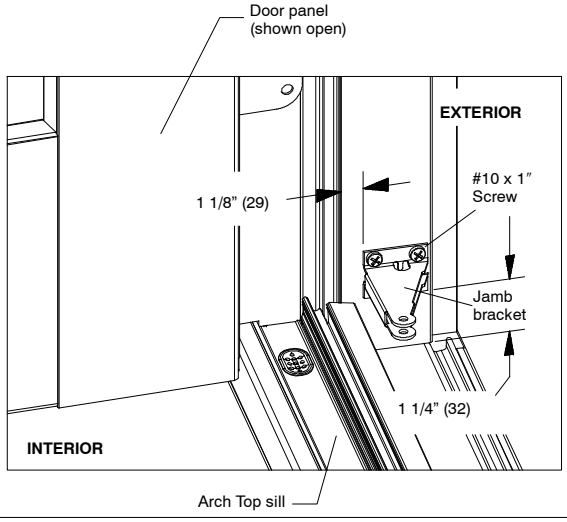

16

46. Place hold- open- washer on closer rod and position over lugs. This will give proper tension for installation. See illustration 17.

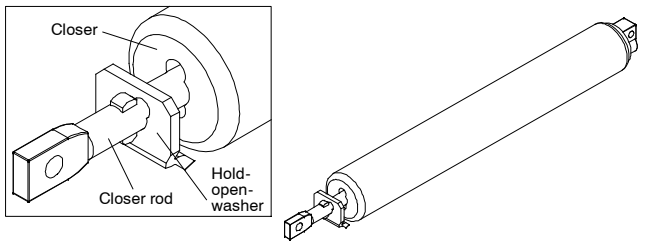

17

47. Close and latch the door.
48. Attach door bracket to closer assembly using door bracket connecting pin. See illustration 18.
49. Attach closer to jamb bracket using jamb bracket connecting pin. See illustration 18.

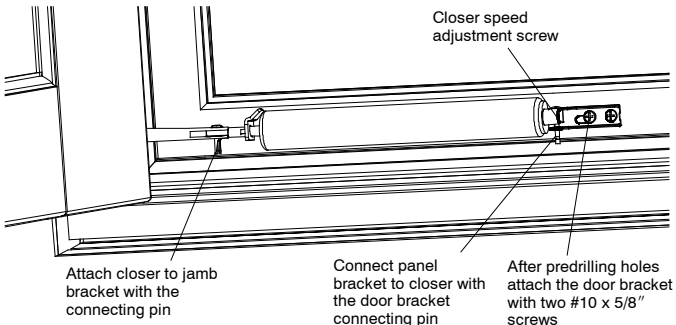

18

50. Hold closer assembly and door bracket in a level position. Mark and drill 1/8″ hole in end of slot opposite cylinder. **(Use caution: DO NOT drill through both sides of screen panel).**
51. Attach door bracket with an #10 x 5/8″ screw in the adjustment slot.

ADJUST CLOSING TENSION

52. Adjust closing tension by moving the closer door bracket.
53. Tighten screw in the adjustment slot
54. Operate door to verify that it closes satisfactorily.
55. Drill remaining 1/8″ hole and secure with the other #10 x 1/2″or #10 x 5/8″ screw as provided in kit.

ADJUST CLOSING SPEED

56. Closing speed adjustment is made by tightening or loosening adjusting screw located at the rear of cylinder assembly. See illustration 19.

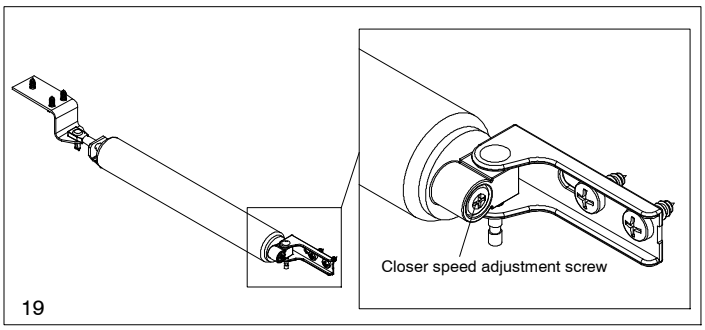

19

ATTACH AND ADJUST SILL SWEEP(S)

57. Slide sill sweep over bottom edge of screen panel with slots facing interior.
58. With sill sweep centered and pushed all the way up, drill 7/64″ holes at bottom of the slots **(Use caution: DO NOT drill through both sides of screen panel).**
59. Attach sill sweep using two #6 x 1/2″ screws.
60. Check to see if sill sweep is resting on sill track evenly. If not, loosen screws, adjust sill sweep, and tighten screws. See illustration 20.

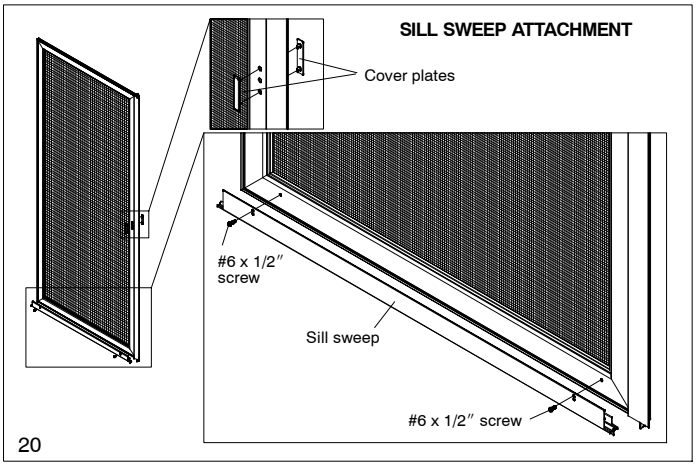

20

INSTALL COVER PLATES (XX UNITS ONLY)

61. Cover plates go over the two unused sets of latch holes located on passive screen panel stile.
62. Align pins on back of cover plate with the outermost latch holes and push pins into holes until they snap into place. See illustration 20.