Marvin Windows and Doors

Trim Set Mounting Instructions

MARVIN Windows and Doors
Made for you.®
www.marvin.com

HANDLE TO ESCUTCHEON PLATE ASSEMBLY

Attach handles to the escutcheon plates using *#10 x 7/16″ hex head screws* and Allen wrench provided. The curve of the handle should be pointed towards the glass. Interior escutcheon has a notch on the side of the plate for the *lock lever*. The notch side of the escutcheon plate is pointed toward the glass. Tighten securely to prevent loosening during operation.

GASKET INSTALLATION

Install one foam gasket on each side of the posts of the exterior escutcheon plate.

INSTALLING EXTERIOR ESCUTCHEON PLATE

Keyed Handle Set:
Align the *keyed cylinder tail piece* with the lockset receiver. Push tailpiece through receiver until the exterior escutcheon plate is tight against exterior face of door panel. Curved portion of handle should be pointed towards glass.

Non-keyed Handle Set:
Place escutcheon plate tightly against door panel, aligning posts with predrilled holes on door panel. Curved portion of the handle should be pointed towards glass.

TEST LOCK LEVER

Test lock assembly by activating lever and key cylinder. If lock does not operate properly, rotate lock cylinder tailpiece 180 degrees.

INTERIOR LEVER HANDLE/THROUGH PIN

Holding the exterior escutcheon in place, install both interior *lever handle* and *through pin* through door panel and lockset. Lever handle position should angle toward the glass.

INTERIOR ESCUTCHEON PLATE

Position interior escutcheon plate against plate interior of door panel, mounting posts aligning with holes on door panel, secure using *#10 x 2″ screws* provided. Curved portion of handle should be pointed towards glass.

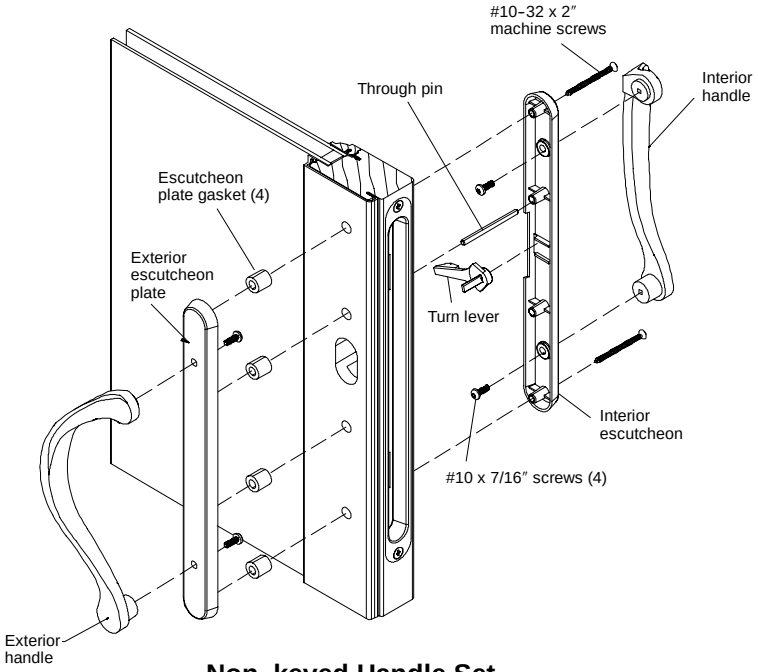

Non-keyed Handle Set

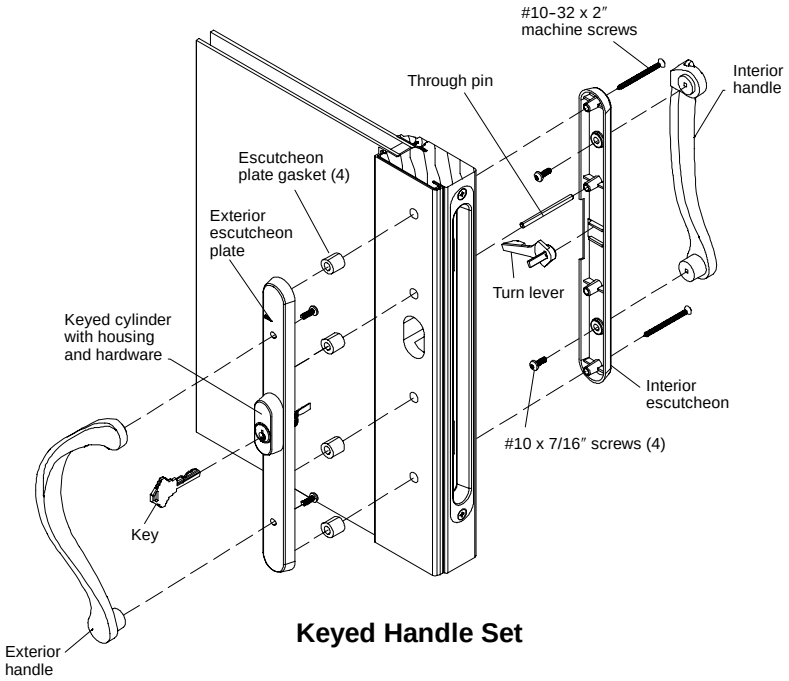

Keyed Handle Set

19970670
SUP-80644
8/26/2003