Wood Ultimate Double Hung Magnum Round Top

Unit Features 1
Minimum and Maximum Guidelines and Certified Ratings 2
Measurement Conversions and Egress Clear Openings 3
Available Shapes 5
Section Details: Single Hung and Double Hung Operators 6
Section Details: 1 5/8" and 2" Transom 7
Section Details: 1 5/8" and 2" Picture 8

Unit Features

Wood Ultimate Double Hung Magnum Round Top: WUDHMRT

Wood Ultimate Single Hung Magnum Round Top: WUSHMRT

Wood Ultimate Double Hung Magnum Round Top Picture: WUDHMRTT

Wood Ultimate Double Hung Magnum Round Top Transom: WUDHMRTT

Hardware:

- Balance system: Spiral balance system.
- Lock: High pressure zinc die-cast cam lock and keeper cam lock and keeper. Standard color: Satin Taupe.
  - Optional colors: White, Brass, Satin Chrome, Antique Brass, Bronze, Oil Rubbed Bronze, and Satin Nickel.
- Sash lift is optional-same color choices as lock.
- Optional window opening device - field applied.

Optional Glass:

- 1" Tri-pane LoĒ-180™ outer piece and LoĒ-180™ inner piece with Argon
- 1" Tri-pane LoĒ-180™ outer piece and LoĒ-180™ inner piece with Krypton/Argon
- 1" Tri-pane LoĒ²272® outer piece and LoĒ²272® inner piece with Argon
- 1" Tri-pane LoĒ²272® outer piece and LoĒ²272® inner piece with Krypton/Argon
- 1" Tri-pane LoĒ 366® outer piece and LoĒ-180™ inner piece with Argon
- 1" Tri-pane LoĒ 366® outer piece and LoĒ-180™ inner piece with Krypton/Argon

Minimum and Maximum Guidelines and Certified Ratings

Minimum and Maximum Guidelines Rough Opening- Wood Ultimate Round Top Double Hung Magnum										
Unit Type		Minimum				Maximum				Max Glass
		Width		Height		Width		Height		
		in	mm	in	mm	in	mm	in	mm	Sq. Ft.
WURTDHM	DP35	26 3/8	(670)	49 1/2	(1257)	60 3/8	(1534)	120 7/8	(3070)	25
WURTDHM	DP50	26 3/8	(670)	49 1/2	(1257)	54 3/8	(1381)	111 7/8	(2842)	18
WURTDHMT	1 5/8" Sash	14 3/8	(365)	13 7/8	(352)	106	(2692)	60	(1524)	25
WURTDHMT	2" Sash	14 3/8	(365)	13 7/8	(352)	106	(2692)	60	(1524)	38
WURTDHMP	1 5/8" Sash	14 3/8	(365)	16 1/16	(408)	121	(3073)	129 1/2	(3289)	60
WURTDHMP	2" Sash	14 3/8	(365)	16 1/16	(408)	105	(2667)	105	(2667)	25
WURTDHMP	Single Glaze	14 3/8	(365)	16 1/16	(408)	105	(2667)	105	(2667)	50

Standard Certified Sizes and Ratings						
Unit Type	Frame Height		Frame Width			
			in	mm	in	mm
	in	mm	53 3/8	(1356)	59 3/8	(1508)
WURTDHM	111 3/8	(2829)	LC-PG50-H		LC-PG35-H	
	121 3/8	(3083)	Not Rated		LC-PG35-H	

NOTE: Maximum sash weight: 130lbs

Measurement Conversions and Egress Clear Openings

Scale: 1 1/2" = 1' 0"

Egress Conversions		
Glass Size Width = 1 7/8" (48) = Egress Width **Rough Opening Width - 4 1/2" (114) = Egress Width**		
Glass Size Height	**Rough Opening Height**	**Egress Height**
20" (508) to less than 28" (711)	48 7/8" (1241) to less than 64 7/8" (1648)	16 1/2" (419)
28" (711) to less than 38" (965)	64 7/8" (1648) to less than 84 7/8" (2156)	24 1/2" (622)
38" (965) to less than 49" (1245)	84 7/8" (2156) to less than 106 7/8" (2715)	34 1/2" (876)
49" (1245) to less than 60" (1524)	106 7/8" (2715) to less than 128 7/8" (3273)	45 1/2" (1156)

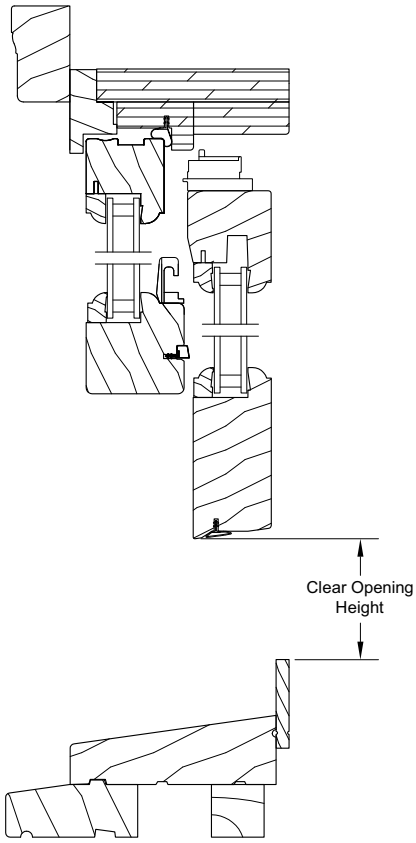

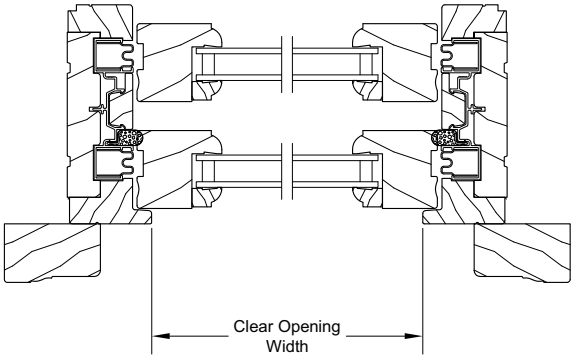

Measurement Conversions

Wood Ultimate Round Top Double Hung Magnum					
Unit Measurement		Width		Height	
From	To				
Frame Size		**in**	**mm**	**in**	**mm**
OM of Frame	Rough Opening	+ 1	(25)	+ 1/2	(13)
Masonry Opening w/BMC	Rough Opening	-2 1/8	(54)	-1 1/16	(27)
Sash/Panel		**in**	**mm**	**in**	**mm**
Glass	OM of Top Sash	+ 2 15/32	-(63)	+ 2 13/16	(71)
Glass	OM of Bottom Sash	+ 2 15/32	-(63)	+ 4 5/8	(117)
Glass		**in**	**mm**	**in**	**mm**
Daylight Opening	Glass	+ 1 1/16	(27)	+ 1 1/16	(27)
Screen		**in**	**mm**	**in**	**mm**
Rough Opening	OM of Screen	-3 1/16	(78)	+ 2 11/32	(60)
Daylight Opening	OM of Screen	+ 4 3/8	(111)	× 2 + 8 21/32	(220)
Half Screen		**in**	**mm**	**in**	**mm**
OM of Frame	OM of Screen	-2 1/16	(52)	÷ 2 -3/16	(05)
Daylight Opening	OM of Screen	+ 4 3/8	(111)	DLO + 5 5/16	(135)

Wood Ultimate Round Top Double Hung Magnum Transom					
Unit Measurements		Width		Height	
From	To				
Frame Size		**in**	**mm**	**in**	**mm**
Frame Size	Rough Opening	+ 1	25	+ 1/2	13
Masonry Opening w/BMC	Frame Size	-3 1/8	79	-2 3/16	56
Glass		**in**	**mm**	**in**	**mm**
Daylight Opening	Glass	+ 1 1/16	27	+ 1 1/16	27

Wood Ultimate Round Top Double Hung Magnum Picture					
Unit Measurements		Width		Height	
From	To				
Frame Size		**in**	**mm**	**in**	**mm**
Frame Size	Rough Opening	+ 1	(25)	+ 1/2	(13)
Masonry Opening w/BMC	Frame Size	-3 1/8	(79)	-2 3/16	(56)
Glass		**in**	**mm**	**in**	**mm**
Daylight Opening	Glass	+ 1 3/16	(30)	+ 1 1/16	(27)

Available Shapes

Subject to approval

Double Hung

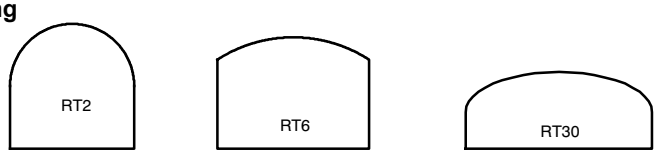

Single Hung

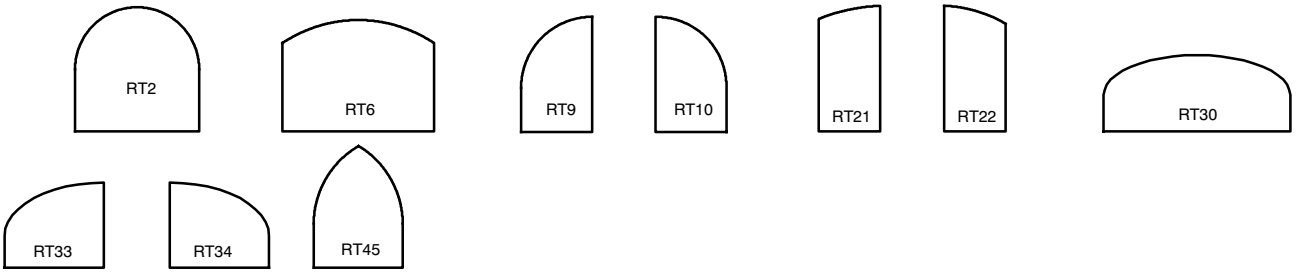

Transom and Picture

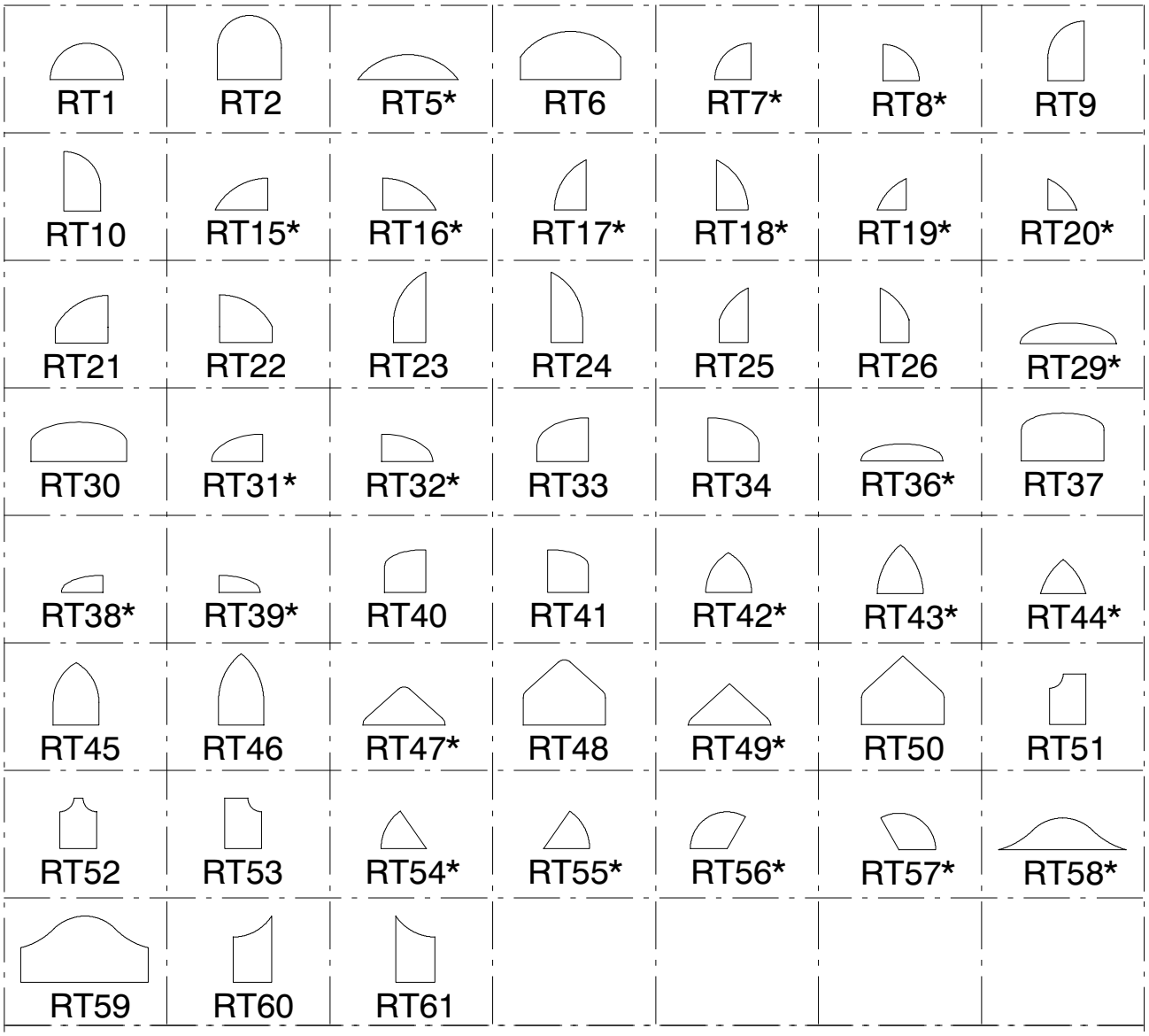

* Shapes are available in both transoms and picture units, but have non-removable sash.

Section Details: Single Hung and Double Hung Operators

Scale: 3" = 1' 0"

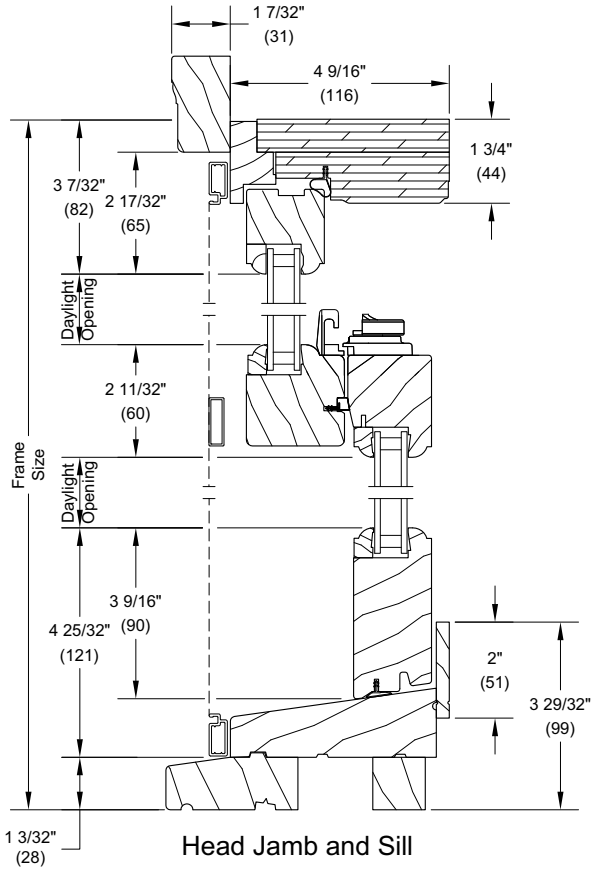

Head Jamb and Sill

Single Hung

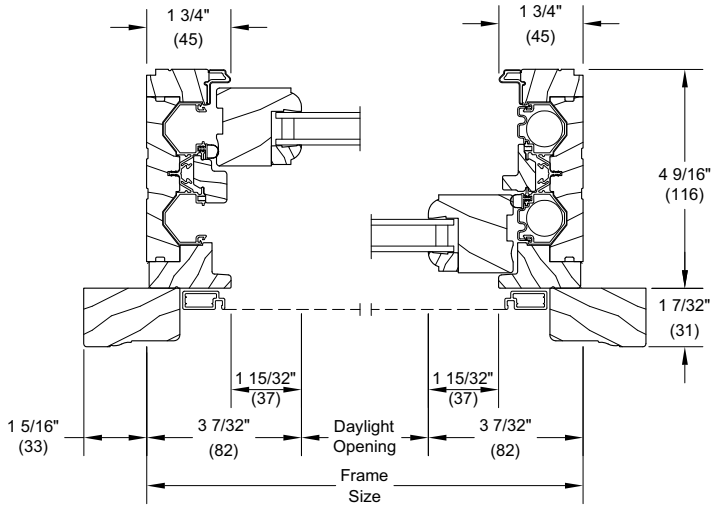

Jambs

Single Hung

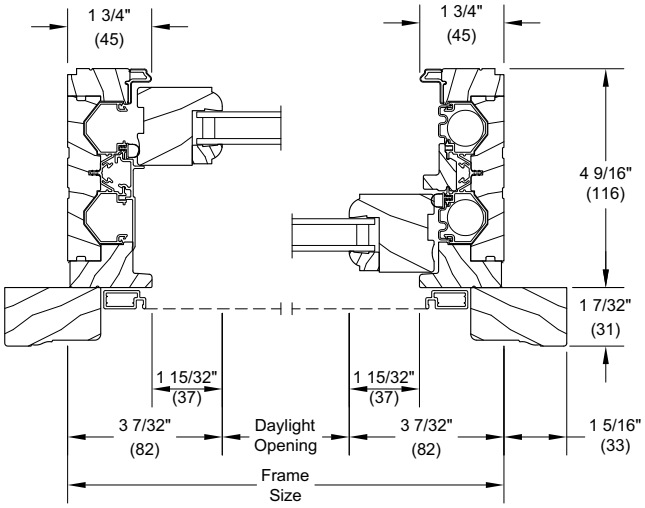

Jamb

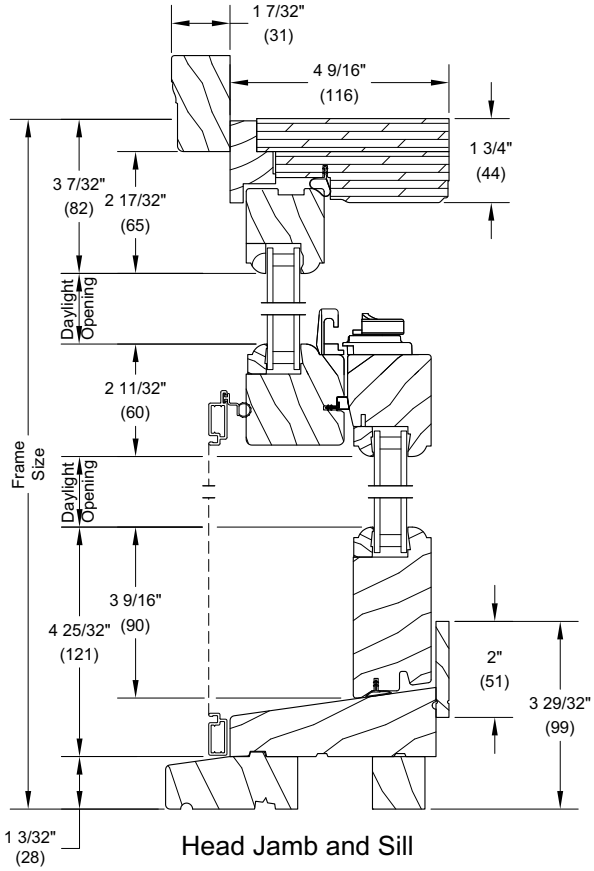

Head Jamb and Sill

Section Details: 1 5/8" and 2" Transom

Scale: 3" = 1' 0"

Ultimate Double Hung Magnum Round Top
1 5/8" In-Sash Transom

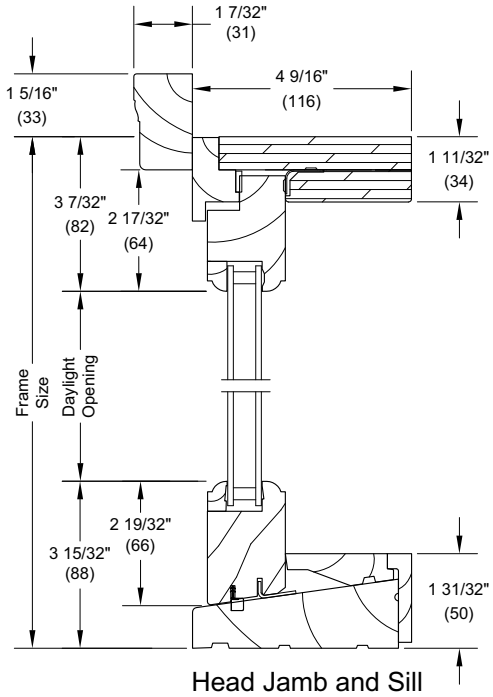

Head Jamb and Sill

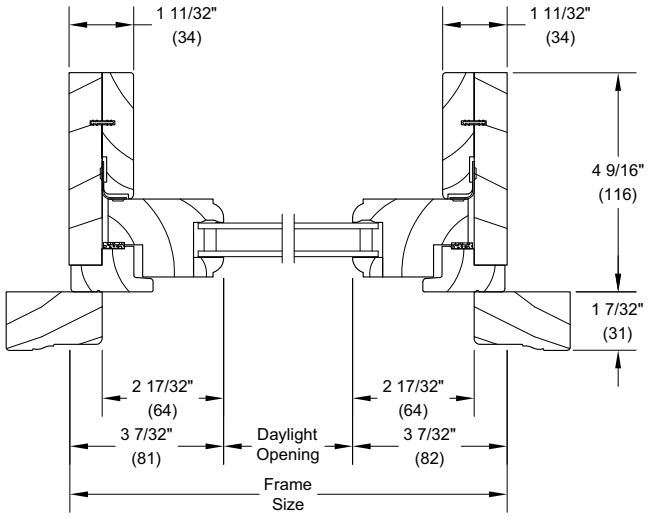

Jambs

Ultimate Double Hung Magnum Round Top
2" In-Sash Transom

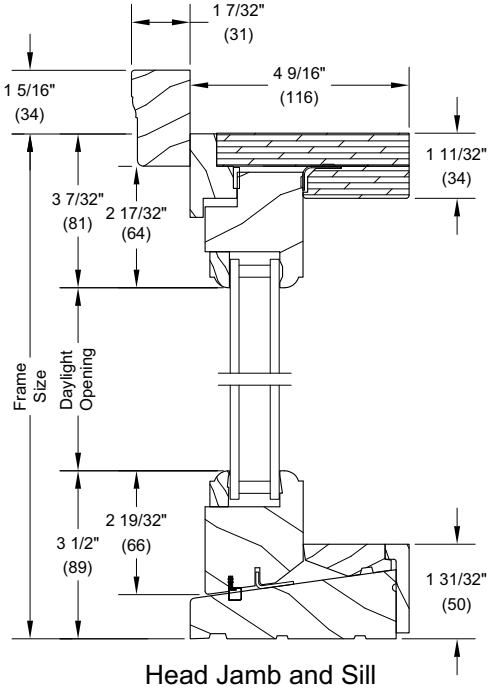

Head Jamb and Sill

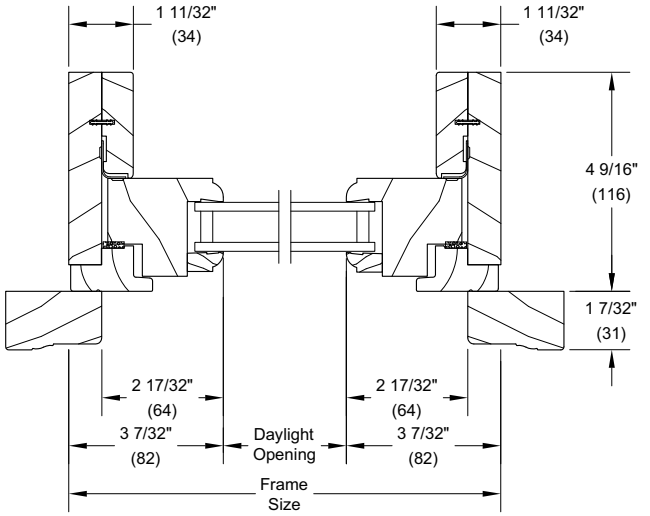

Jambs

Section Details: 1 5/8" and 2" Picture

Scale: 3" = 1' 0"

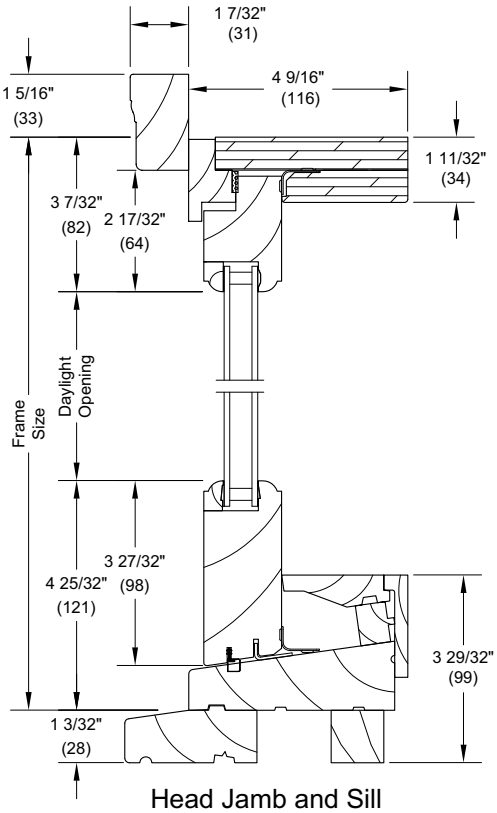

Head Jamb and Sill

Ultimate Double Hung Magnum Round Top
1 5/8" In-Sash Picture

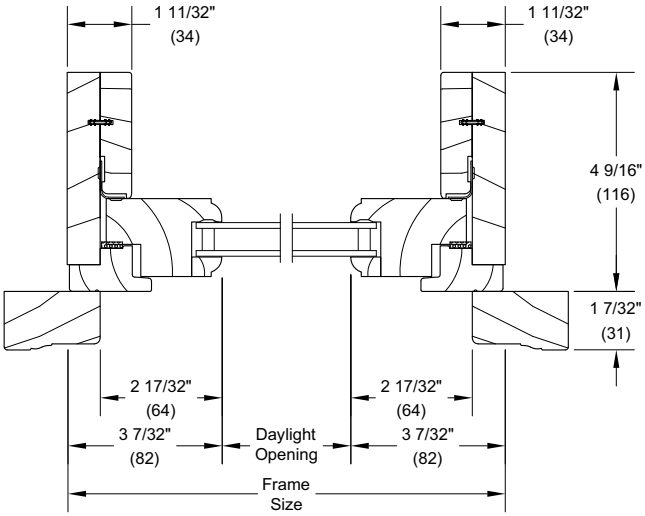

Jambs

Ultimate Double Hung Magnum Round Top
2" In-Sash Picture

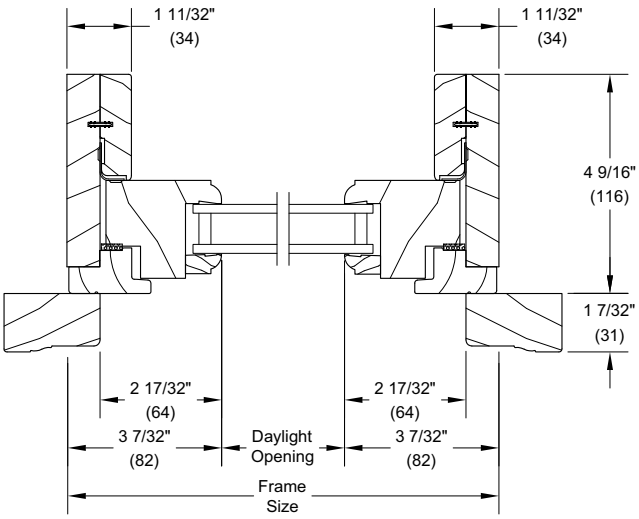

Jambs

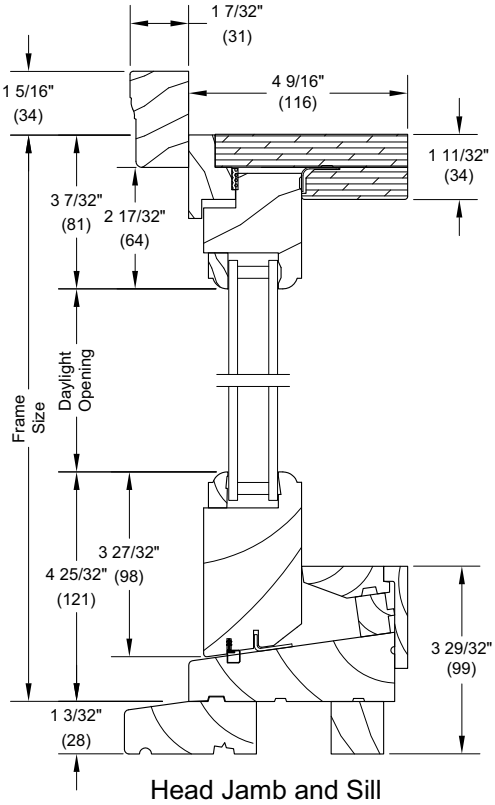

Head Jamb and Sill