Clad Magnum Tilt-Turn/Hopper

Unit Features 1
Standard Divided Lites 2
Optional Interior Square Simulated Divided Lites 3
Minimum and Maximum Measurements/Certified Sizes and Ratings/Unit Operation 4
Measurement Conversions 5
Section Details: Operating 6
Section Details: Casing Options 7
Section Details: Mullions 8

Unit Features

Clad Magnum Tilt-Turn: CMTT

Clad Magnum Hopper: CMHOP

Frame:

- Frame thickness: 3 1/16" (78).
- Sill thickness: 1 11/16" (43).
- Frame width: 2 13/32" (61), 4 9/16" (116).

Sash:

- Sash, Stile and Rail thickness: 2 1/4" (57).
- Interior glazed.

Hardware:

- Tilt-Turn: Multi-point locking hardware with Bronze pistol grip handle.
  - Optional Hardware Color: White, Satin Chrome, Solid Brass, Bronze keyed or White keyed handle.
  - Optional Features: turn restrictor, security key or additional scissor stay.
- Tilt-Turn Keyed Stationary: Key operated lock allows authorized swing only.
- Hopper: Bronze pistol grip handle.
  - Optional Hardware Color: White, Satin Chrome, or Solid Brass.
  - Tilt Stay - Limiter on Hopper.

Weather Strip:

- Weather Strip: Resilient leaf type gasket. Color: Black.

Glass and Glazing:

- Glazing Seal: Silicone glazed.
- Glazing Type: Clear glass, optional glass types: LoĒ^2-272® with Argon, LoĒ^3-366® with Argon, Laminated, Tempered, Obscure, Bronze tint, Gray tint, and Reflective Bronze.
- Optional Glazing available: LoĒ-180™ with Argon, LoĒ^3-366® with Argon, 1" Tri-pane LoĒ-180™ outer piece and LoĒ-180™ inner piece with Argon, 1" Tri-pane LoĒ^2-272® outer piece and LoĒ^2-272® inner piece with Krypton/Argon, 1" Tri-pane LoĒ^3-366® outer piece and LoĒ-180™ Krypton/Argon, clear, tints, tempered, obscure and others.
- Insulating glass will be altitude adjusted with capillary tubes for higher elevations.

Standard Divided Lites

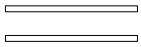

Insulating Glass

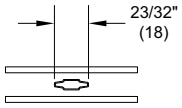

Aluminum 11/16"
Contour GBG

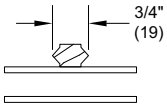

3/4" Grille

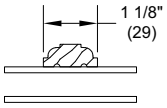

1 1/8" Grille

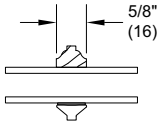

5/8" SDL

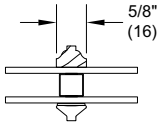

5/8" SDL
W/Spacer

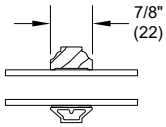

7/8" SDL

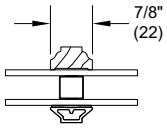

7/8" SDL
W/Spacer Bar

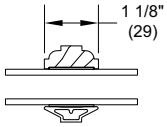

1 1/8" SDL

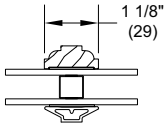

1 1/8" SDL
W/Spacer Bar

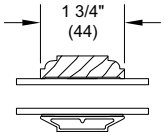

1 3/4" SDL

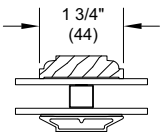

1 3/4" SDL
W/One Spacer Bar

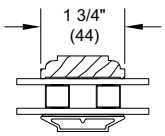

1 3/4" SDL
W/Two Spacer Bars

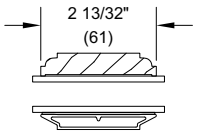

2 13/32" SDL

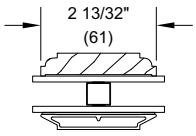

2 13/32" SDL
W/One Spacer Bar

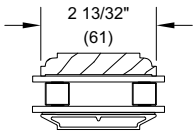

2 13/32" SDL
W/Two Spacer Bar

Optional Interior Square Simulated Divided Lites

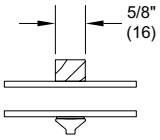

5/8" SDL

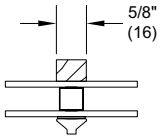

5/8" SDL
W/Spacer

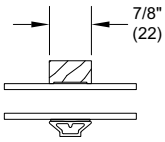

7/8" SDL

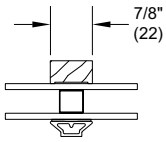

7/8" SDL
W/Spacer Bar

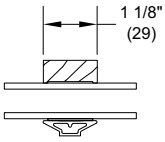

1 1/8" SDL

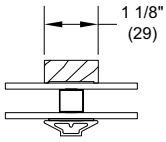

1 1/8" SDL
W/Spacer Bar

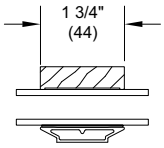

1 3/4" SDL

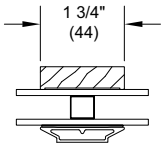

1 3/4" SDL
W/One Spacer Bar

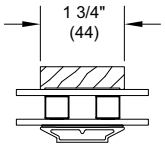

1 3/4" SDL
W/Two Spacer Bars

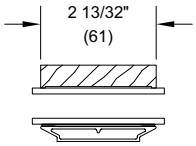

2 13/32" SDL

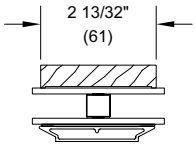

2 13/32" SDL
W/One Spacer Bar

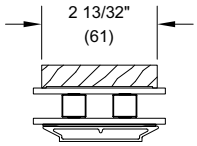

2 13/32" SDL
W/Two Spacer Bar

Minimum and Maximum Measurements/Certified Sizes and Ratings/Unit Operation

Not to Scale

Minimum and Maximum Guidelines - Magnum Hopper											
Unit Type		Frame Size									
		Min Size Unit					Max Size Unit				
		in	mm	×	in	mm	in	mm	×	in	mm
Magnum Hopper	Insulated Glass 3/4" (19) or 1" (25)	23	(584)	×	19 1/2	(495)	71	(1803)	×	59 1/2	(1511)

Certified Sizes and Ratings				
Unit Type	Frame Height		Frame Width	
			in	mm
	in	mm	65	(1651)
Clad Magnum Hopper	49	(1245)	CW-PG40-AP	

Certified Sizes and Ratings				
Unit Type	Frame Height		Frame Width	
			in	mm
	in	mm	49	(1245)
Clad Magnum Tilt Turn	73	(1854)	CW-PG40-DA	
Clad Magnum Inswing Casement	73	(1854)	CW-PG40-C	

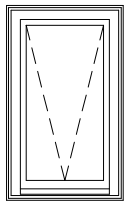

Hopper

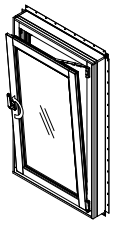

Tilt position

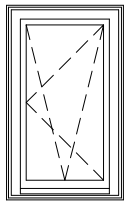

Left

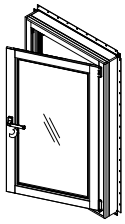

Turn position

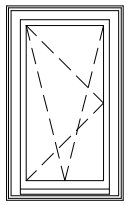

Right

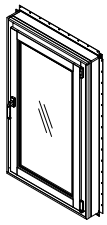

Lock position

NOTE: All operations viewed from exterior.

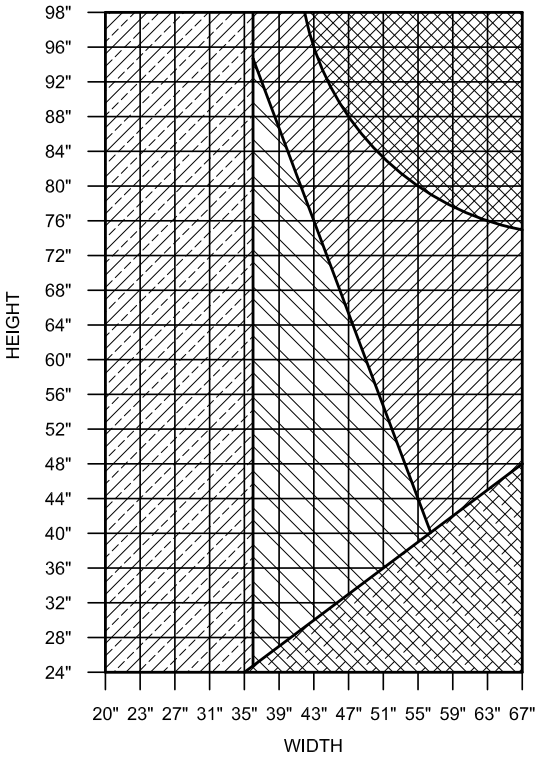

Tilt-Turn Handle Location			
Frame Size Height 2 13/32" Jamb Unit		Handle Height from Bottom of Sash	
24" - 27 7/8"	(610-708)	7 7/16"	(189)
27 15/16" - 35 3/4"	(710 - 908)	11 1/16"	(281)
35 13/16" - 43 5/8"	(910 - 1108)	17"	(432)
43 11/16" - 51 1/2"	(1110 - 1308)	20 15/16"	(532)
51 9/16" - 75 1/8"	(1310 - 1908)	22 7/8"	(581)
75 3/16" - 96"	(1910 - 2489)	40 1/16"	(1018)

LEGEND
FOR UNITS IN THIS SIZE RANGE CONTACT MARVIN WINDOW ARCHITECTURAL DEPARTMENT
UNITS IN THIS SIZE RANGE REQUIRE ADDITIONAL SCISSOR STAY HARDWARE
ADDITIONAL OPTIONAL SCISSOR STAY AVAILABLE
ADDITIONAL SCISSOR STAY NOT AVAILABLE UNDER 36"
NOT AVAILABLE

Measurement Conversions

Scale: 1 1/2" = 1' 0"

Unit Measurements		Width		Height	
From	**To**				
Rough Opening		**in**	**mm**	**in**	**mm**
OM of Frame	Rough Opening	+ 1	(25)	+ 1/2	(13)
Masonry Opening w/BMC	Rough Opening	-2 1/8	(54)	-1 11/16	(43)
Masonry Opening w/Flat Casing	Rough Opening	-5 1/2	(140)	-3 3/8	(86)
Masonry Opening w/out BMC	Rough Opening	+ 1/2	(13)	+ 1/4	(06)
Sash		**in**	**mm**	**in**	**mm**
OM of Frame	OM of Sash	-2 13/16	(71)	-4 3/32	(104)
Daylight Opening	OM of Sash	+ 6 5/16	(160)	+ 6 5/16	(160)
Glass		**in**	**mm**	**in**	**mm**
Daylight Opening	Glass	+ 1 1/8	(29)	+ 1 1/8	(29)

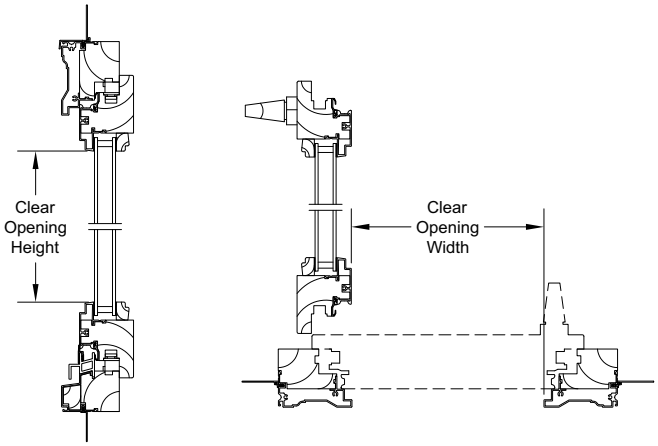

Net Clear Opening:

Rough Opening Width - 7 1/8" (181)

Rough Opening Height - 6" (152)

Section Details: Operating

Scale: 3" = 1' 0"

Operating - 2 13/32" Jambs

NOTE: Handle location shown is for Magnum Tilt-Turn. Handle is centered on the top rail for Hopper operation

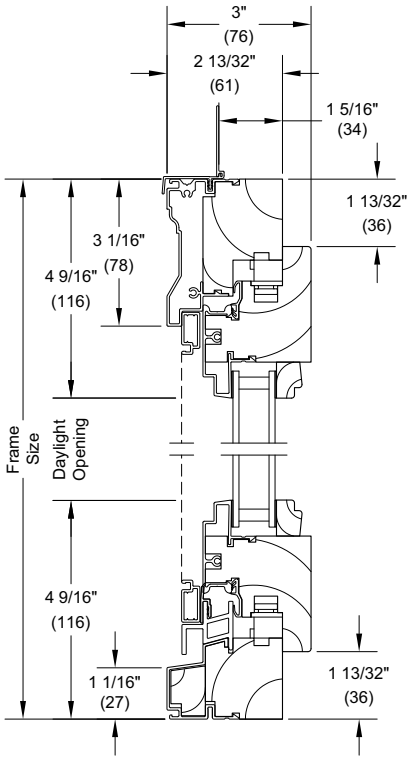

Head Jamb and Sill

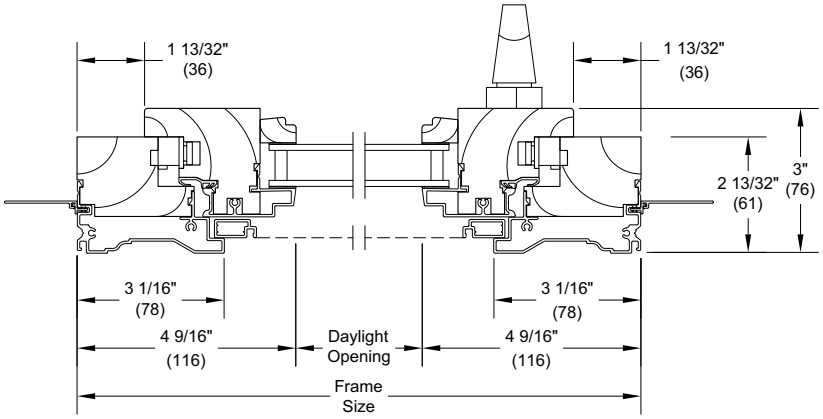

Jambs

Operating - 4 9/16" Jambs

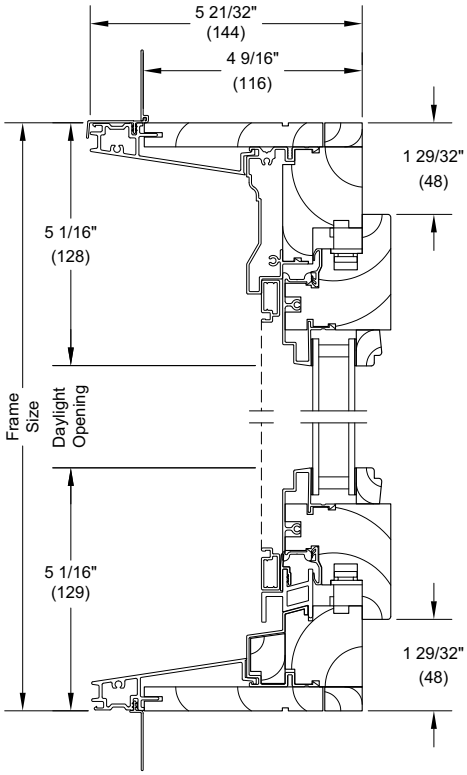

Head Jamb and Sill

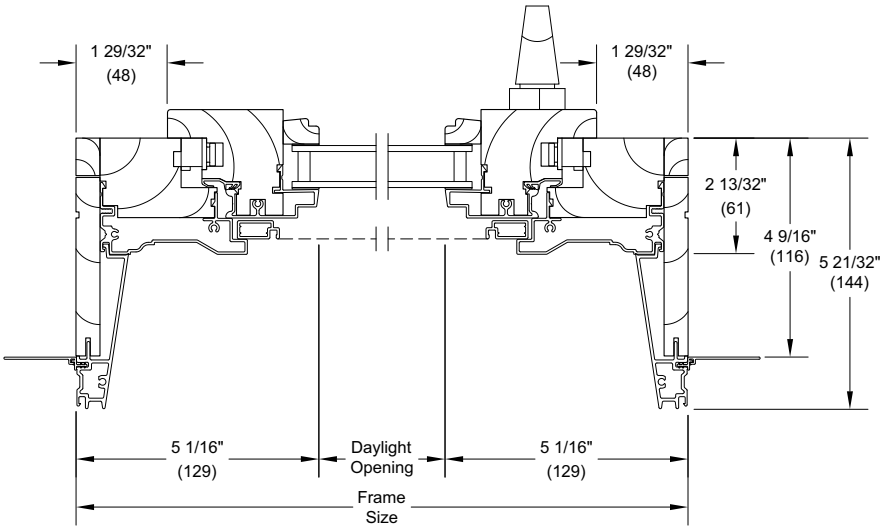

Jambs

Section Details: Casing Options

Scale: 3" = 1' 0"

4 9/16" Jambs

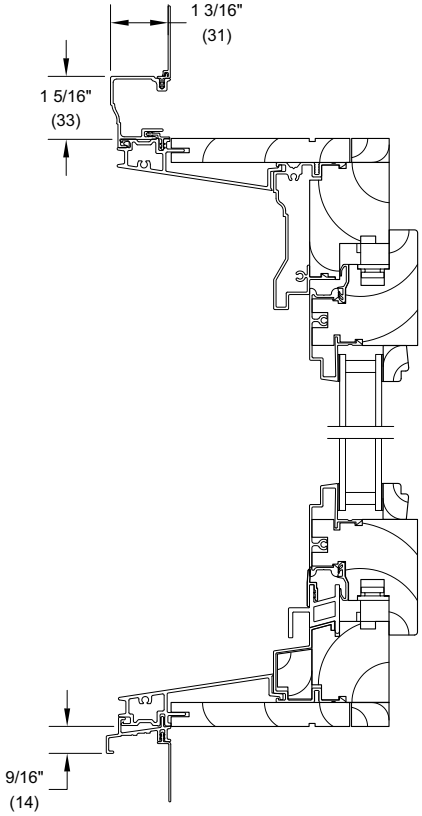

Head Jamb and Sill
with Clad Brick Mould Casing

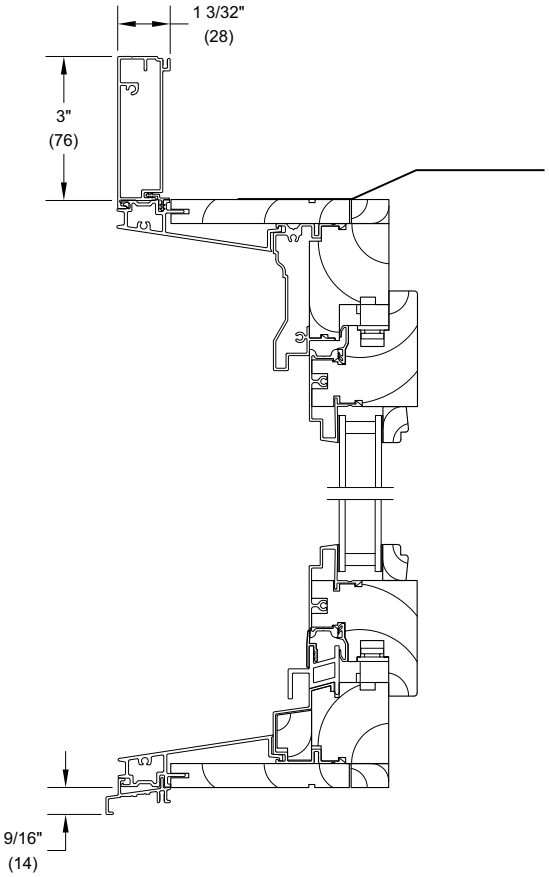

Head Jamb and Sill
with Clad Flat Casing

Section Details: Mullions

Scale: 3" - 1' 0"

Jamb Extension Policy for Multiples Assemblies

To provide the necessary structural integrity for multiple width and height assemblies, 4 9/16" (116) exterior jamb extensions must be applied around the perimeter and between the shortest intermediate mulls.

Total assembly Rough Opening or Masonry Opening must be specified to assure individual unit sizes will be appropriately calculated.

Operating
2 13/32" Jambs

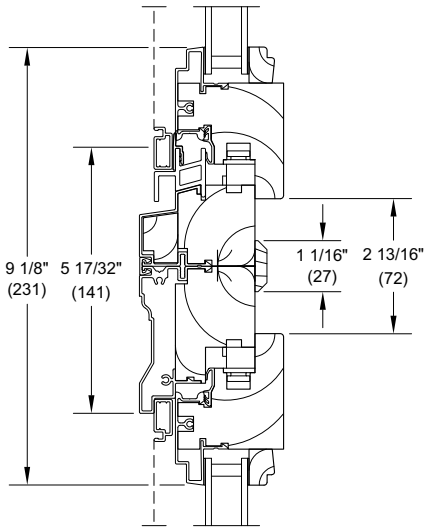

Horizontal Mullion

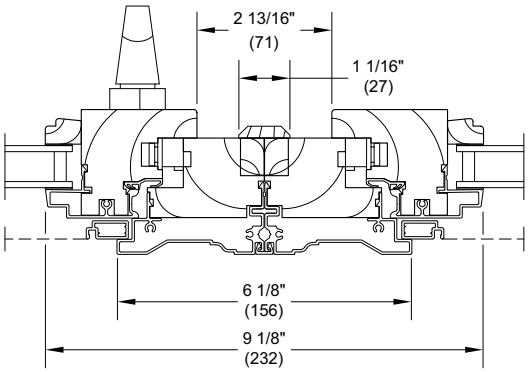

Vertical Mullion

Operating
4 9/16" Jambs

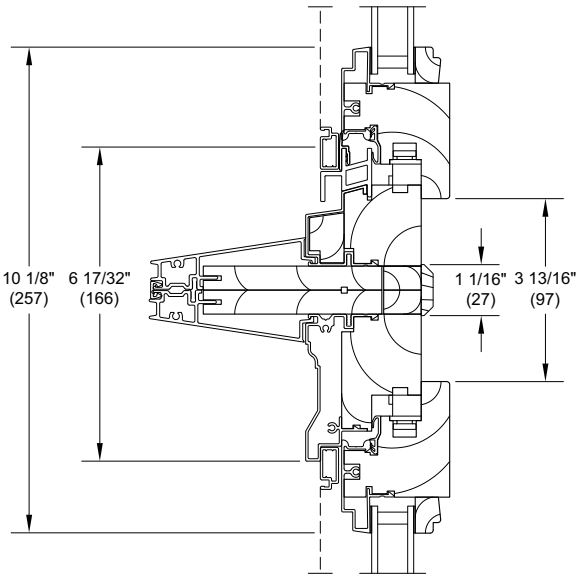

Horizontal Mullion

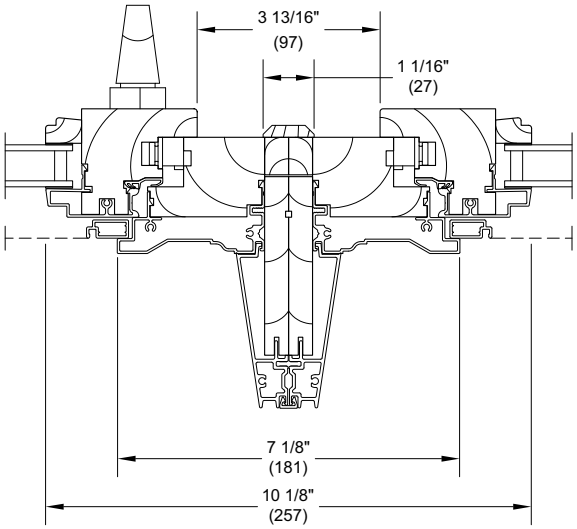

Vertical Mullion