MAGNUM TILT–TURN/INSWING CASEMENT

Clad Magnum Tilt–Turn/ Inswing Casement

Unit Features/Collection 2
Minimums and Maximums Measurements 4
Measurement Conversions 5
Section Details 6

Wood Magnum Tilt–Turn/ Inswing Casement

Unit Features 7
Minimums and Maximums Measurements 8
Measurement Conversions 9
Section Details 10

NOTE:

Specifications and technical data are subject to change without notice.
Illustrations are not to scale.
Allow 2 mm tolerance on all measurements.
All metric measurements are shown in millimeters unless otherwise noted.
For technical assistance about Marvin products, call your nearest Marvin International Distributor or visit our website: www.marvin.com/CE.

Note:
Values shown in parenthesis represent metric equivalents.
For product specifications please refer to the CSI Product Specifications CD, or contact your Marvin representative.

Magnum Tilt−Turn/Inswing Casement Collection consists of a collection of inswinging and dual operation Inswing and tilting window platforms:
- Clad Magnum Tilt−Turn (CMTT) operator or stationary windows
- Clad Magnum Inswing Casement (CMICA) operator windows
- Clad Magnum Inswing Casement (CMICA) Keyed stationary windows
- Wood Magnum Tilt−Turn (WMTT) operator or stationary windows
- Wood Magnum Inswing Casement (WMICA) operator windows
- Wood Magnum Inswing Casement (WMICA) Keyed stationary windows

Clad Magnum Tilt−Turn/Inswing Casement::

Frame:
- Interior: Standard is Pine Wood, optional Douglas Fir. Species available are Mahogany, Cedro Macho, Vertical Grain Douglas Fir, Cherry, and White Oak.
- Exterior: Extruded aluminum .050″(1.3) thick. Clad standard colors are Stone White, Bahama Brown, Bronze, Pebble Gray or Evergreen. Clad select colors are Arctic White, Ebony, French Vanilla, Wineberry, Desert Beige, Sierra White, Coconut Cream, Cashmere, Cadet Gray, Cumulus Gray, Sherwood Green, Hampton Sage, Cascade Blue, Cobalt Blue. Custom colors are available, please contact your Marvin representative.
- Frame depth: 2 13/32″ (61) from back side of nailing fin to interior of frame.
  - Frame thickness: 3 1/16″ (78)
  - Sill thickness: 2 7/16″ (62)
- Frame depth: 4 9/16″ (116) from backside of nailing fin to interior of frame.
  - Frame thickness: 2 9/16″ (91)
  - Sill thickness: 2 15/16″ (75)

Sash:
- Interior: Standard is Pine Wood, optional Douglas Fir. Species available are Mahogany, Cedro Macho, Vertical Grain Douglas Fir, Cherry, and White Oak.
- Exterior: Extruded aluminum .050″(1.3) thick. Clad standard colors are Stone White, Bahama Brown, Bronze, Pebble Gray or Evergreen. Clad select colors are Arctic White, Ebony, French Vanilla, Wineberry, Desert Beige, Sierra White, Coconut Cream, Cashmere, Cadet Gray, Cumulus Gray, Sherwood Green, Hampton Sage, Cascade Blue, Cobalt Blue. Custom colors are available, please contact your Marvin representative.
- Sash Stile and Rail depth: 2 1/4″ (57).
- Interior glazed

Painted Interior Finish:
- Optional factory applied water based acrylic paint over compatible primer. Available on Pine products only. Color – White

Hardware:
- Tilt turn and Inswing Casement: Multi−point locking hardware with Bronze pistol grip handle. Optional White, Satin Chrome, Solid Brass, Bronze keyed or White keyed handle. Optional Turn Restrictor, Security key, Additional Scissor Stay
- Tilt−Turn keyed stationary: Independent key operated locks allows authorized swing only.

Weather Strip:
- Weather Strip: Resilient leaf type gasket. Color: Black

Jamb Extensions:
- Interior Jamb extensions not recommended due to sash interference, but may be purchased for various wall thickness factory applied up to 14″ (356) deep, finish to match interior. Jamb extensions over 7 9/16″ (192) will be edge glues, 4 11/16″ (119) jamb extension will be shipped loose.

Insect Screens:
- Standard full screen, removable to interior. Screen mesh: Charcoal fiberglass 18 x 16. Optional screen mesh: Charcoal aluminum wire, Black aluminum wire, Bright aluminum wire, bright bronze wire
- Aluminum screen mesh 18 x16 frame: Color: Stone White, Evergreen, Bronze or Pebble Gray, Select and Custom colors available.
- Optional Charcoal High Transparency screen mesh (CH Hi−Tran) 20 x 20 fiberglass

Interior / Exterior Simulated Divided Lites (SDL)
- Interior bar: 5/8″ (16), 7/8″ (22) or 1 1/8″ (29), 1 3/4″ (44), or 2 13/32″ (61) wide bars. Pine or Douglas Fir wood standard, optional Mahogany, Cedro Macho, Vertical Grain Douglas fir, Cherry and White Oak. Finish to match interior.
- Exterior bar: Extruded aluminum clad, 5/8″ (16),7/8″ (22), 1 1/8″ (29), 1 3/4″ (44) or 2 13/32″ (61) wide bars, finish to match exterior.
- Pattern: Rectangular, custom lite layouts available, contact your Marvin representative.

Removable Interior Grilles:
- Bars: Pine wood 3/4″ (19) or 1 1/8″ (29) wide bars.
- Pattern Rectangular, custom lite layout available, contact your Marvin representative.

Grilles–Between–the–Glass (GBG):

- 11/16″ (17) white contoured aluminum bar.
- Exterior Colors: Stone White, Arctic White, Bronze, Pebble Grey, Bahama Brown, Cashmere, Ebony, Evergreen, Sherwood Green, Sierra White, French Vanilla, Coconut Cream, and Wineberry*.
- Interior Colors: White is default. Optional colors: Bronze, Pebble Gray, and Sierra White.
- Optional flat aluminum bar available.

* The exterior GBG color is designed to best match the Marvin clad colors when used with LoĒ glass. The use of different types of glazing options may alter the exterior GBG color appearance.

Glass and Glazing:

- Standard glass is insulating LoĒ^2 272® with Argon.
- Glazing seal: Silicon glazed.
- Optional glazing available clear, LoĒ^3-366® with Argon, LoĒ-180™ with Argon, 1″ Tri–pane LoĒ-180™ with Argon, 1″ Tri–pane LoĒ^2 272® with Argon, 1″ Tri–pane LoĒ^2 272® with Krypton/Argon, 1″ Tri–pane LoĒ-180™ with Krypton/Argon, tints, tempered, sandblast obscure and others.
- Other glazing options with gas fill may be available for certain elevations, contact your Marvin representative.

Accessories:

- Installation brackets: 6 3/8″ (162), 9 3/8″ (238), or 15 3/8″ (390).
- Masonry brackets: 6″ (152) or 10″ (254).
- Aluminum extrusions: Brick mould casing, flat casing, various special casings, mullion cover, frame expander, mullion expander, jamb extender, accessory kerf cover.

Mulling:

- Not available as CE marked.

MINIMUM AND MAXIMUM MEASUREMENTS

Certified Minimum and Maximum Guidelines – MAGNUM TILT–TURN/INSWING CASEMENT		
Unit Type	Frame Size	
	Minimum Size Unit	Maximum Size Unit
Insulating Glass	20″ (508) x 24″ (610)	48″ (1219) x 72″ (1829)

Tilt–Turn Handle Location	
Frame Size Height 2 13/32″ Jamb Unit	Handle Height from Bottom of Sash
24″ – 27 7/8″ (610 – 708)	7 7/16″ (189)
27 15/16″ – 35 3/4″ (710 – 908)	11 1/16″ (281)
35 13/16″ – 43 5/8″ (910 – 1108)	17″ (432)
43 11/16″ – 51 1/2″ (1110 – 1308)	20 15/16″ (532)
51 9/16″ – 72″ (1310 – 1829)	22 7/8″ (581)

NOTE:
Tilt–Turn handle height dimension shown is from the bottom of the sash to the pivot point of the handle.
Inswing Casement handle pivot point location is centered on the top rail.

Tilt – Turn Size & Weight Limitation

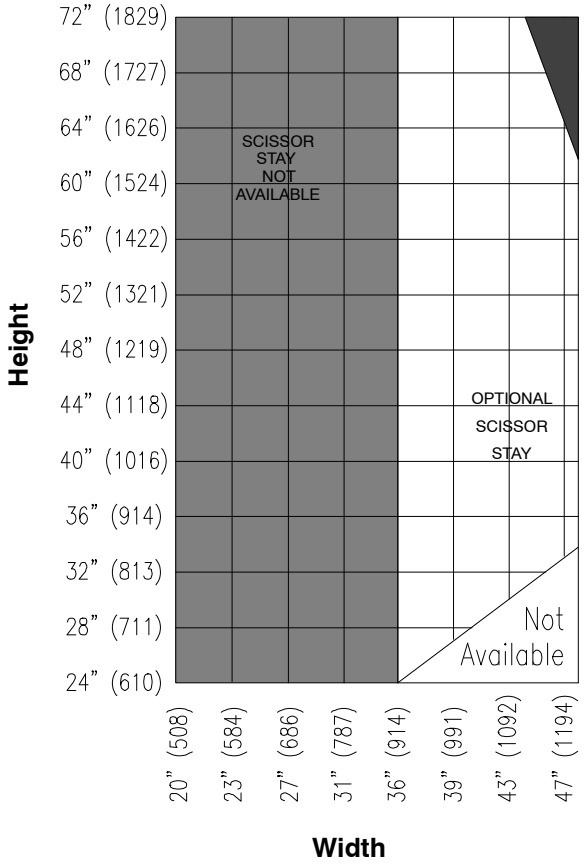

Legend

Units in this size range require additional scissor stay hardware.

This chart is based upon the outside measurement of unit without BMC or subsill and applies to 2 13/32″ (61) or 4 9/16″ (116) jamb units.

Operation

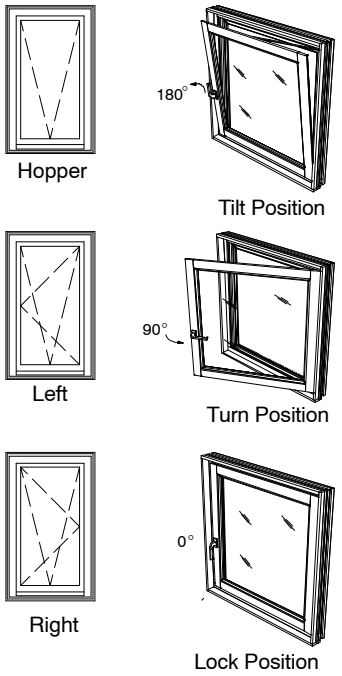

NOTE:
All operation as viewed from the exterior.

CLAD TILT–TURN/INSWING CASEMENT 2 13/32″ (61) JAMBS

Unit	Width		Height	
Masonry Opening to Rough Opening (without BMC)	+ 1/2″	(13)	+ 1/4″	(6)
Masonry Opening to Rough Opening (with BMC)	– 2 1/8″	(54)	– 1 11/16″	(43)
Masonry Opening to Rough Opening (with Flat Casing)	– 5 1/2″	(140)	– 3 3/8″	(86)
Masonry Opening to OM of BMC	– 1/2″	(13)	– 1/4″	(6)
Masonry Opening to OM of Flat Casing	– 1/2″	(13)	– 1/4″	(6)
OM of Frame to Rough Opening	+ 1″	(25)	+ 1/2″	(13)
Glass Size to Rough Opening	+ 9″	(229)	+ 8 1/2″	(216)
Net Clear Opening to Rough Opening	+ 7 1/8″	(181)	+ 6 3/8″	(162)
Glass Size to OM of Sash	+ 5 3/16″	(132)	+ 5 3/16″	(132)
OM of Sash to Rough Opening	+ 3 13/16″	(97)	+ 3 5/16″	(84)
Daylight Opening to Glass Size	+ 1 1/8″	(29)	+ 1 1/8″	(29)
Daylight Opening to Rough Opening	+ 10 1/8″	(257)	+ 9 5/8″	(244)
OM of Screen to Rough Opening	+ 6 23/32″	(171)	+ 5 5/16″	(135)

CLAD TILT–TURN/INSWING CASEMENT 4 9/16″ (116) JAMBS

Unit	Width		Height	
Masonry Opening to Rough Opening (without BMC)	+ 1/2″	(13)	+ 1/4″	(6)
Masonry Opening to Rough Opening (with BMC)	– 2 1/8″	(54)	– 1 11/16″	(43)
Masonry Opening to Rough Opening (with Flat Casing)	– 5 1/2″	(140)	– 3 3/8″	(86)
Masonry Opening to OM of BMC	– 1/2″	(13)	– 1/4″	(6)
Masonry Opening to OM of Flat Casing	– 1/2″	(13)	– 1/4″	(6)
OM of Frame to Rough Opening	+ 1″	(25)	+ 1/2″	(13)
Glass Size to Rough Opening	+ 10″	(254)	+ 9 1/2″	(241)
Net Clear Opening to Rough Opening	+ 8 1/8″	(206)	+ 7 3/8″	(187)
Glass Size to OM of Sash	+ 5 3/16″	(132)	+ 5 3/16″	(132)
OM of Sash to Rough Opening	+ 4 13/16″	(122)	+ 4 5/16″	(110)
Daylight Opening to Glass Size	+ 1 1/8″	(29)	+ 1 1/8″	(29)
Daylight Opening to Rough Opening	+ 11 1/8″	(283)	+ 10 5/8″	(270)
OM of Screen to Rough Opening	+ 7 23/32″	(191)	+ 6 5/16″	(160)

SECTION DETAILS: OPERATING – 2 13/32″ (61) and 4 9/16″ (116) JAMBS

SCALE: 3″ = 1′ 0″ (76 = 305)

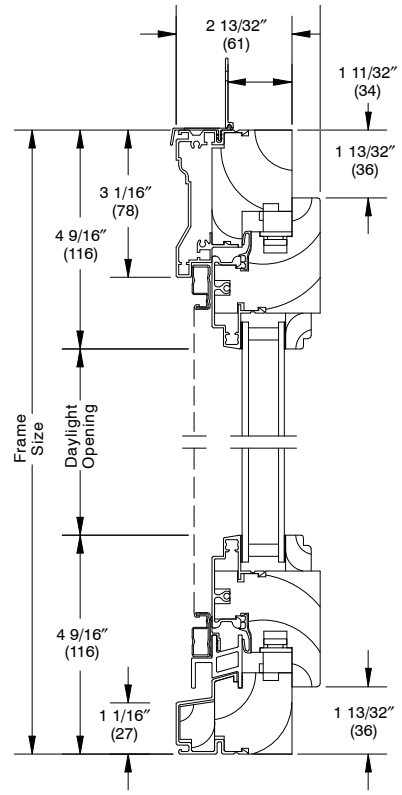

Head Jamb and Sill

Operating
2 13/32″ (61) Jambs

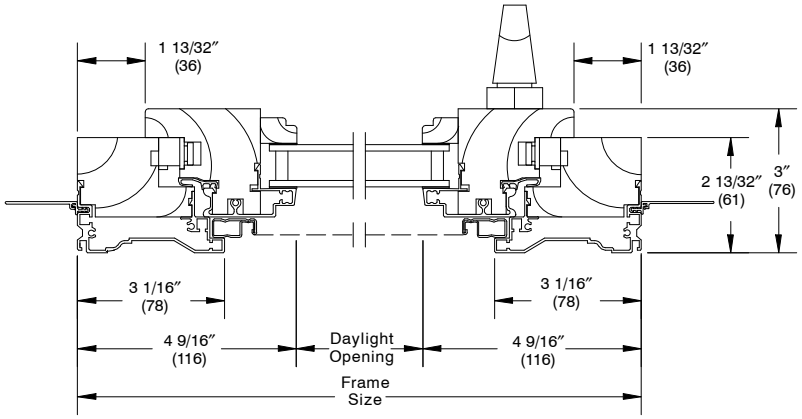

Jambs

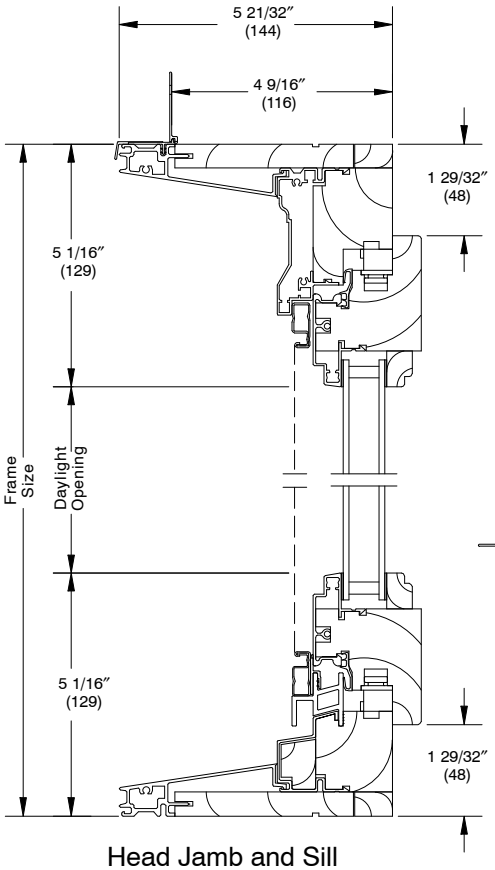

Head Jamb and Sill

Operating
4 9/16″ (116) Jambs

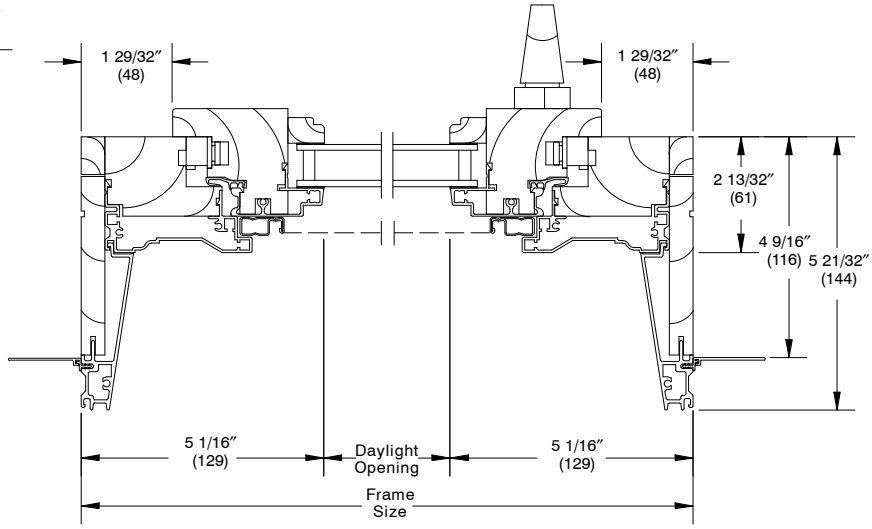

Jambs

Frame:
- Species: Standard is Pine Wood, Species available are Mahogany and Vertical Grain Douglas Fir
- Frame depth: 2 13/32″ (61) from back side of casing to interior of frame.
  - Frame thickness: 3 1/16″ (78)
  - Sill thickness: 3 11/16″ (94)
- Frame depth: 4 9/16″ (116) from back side of casing to interior of frame.
  - Frame thickness: 3 9/16″ (91)
  - Sill thickness: 3 11/16″ (94)

Sash:
- Species: Standard is Pine Wood, Species available are Mahogany and Vertical Grain Douglas Fir
- Operating Sash thickness: 2 1/4″ (57 mm)
- Operating stile/Rail width: 3 5/32″ (80) Measurement taken from the inside

Painted Interior Finish:
- Optional factory applied water based acrylic paint over compatible primer. Available on Pine Wood products only. Color – White

Hardware:
- Tilt turn and Inswing Casement: Multi–point locking hardware with Bronze pistol grip handle. Optional White, Satin Chrome Solid, Brass, Bronze keyed or White keyed handle. Optional Turn Restrictor, Security key, Additional Scissor Stay
- Tilt–Turn keyed stationary: Independent key operated locks allow authorized swing only.

Weather Strip:
- Weather strip: Resilient leaf type gasket. Color: Black

Jamb Extensions:
- Interior Jamb extensions not recommended due to sash interference, but may be purchased for various wall thickness factory applied up to 14″ (356) deep, finish to match interior. Jamb extensions over 7 9/16″ (192) will be edge glues, 4 11/16″ (119) jamb extension will be shipped loose.

Insect Screens:
- Standard full screen, removable to interior. Screen mesh: Charcoal fiberglass 18 x 16. Optional screen mesh: Charcoal aluminum wire, Black aluminum wire, Bright aluminum wire, bright bronze wire
- Aluminum screen mesh 18 x16 frame: Color: Stone White, Evergreen, Bronze or Pebble Gray, Select and Custom colors available.
- Optional Charcoal High Transparency screen mesh (CH Hi–Tran) 20 x 20 fiberglass

Simulated Divided Lite (SDL):
- Available with or without spacer bars.
- Bar (interior and exterior) 5/8″ (16), 7/8″ (22), or 1 1/8″ (29) wide bars. Pine Wood standard, optional Mahogany or Vertical Grain Douglas Fir. Finish to match interior and exterior
- Pattern: Rectangular, custom lite layouts available, contact your Marvin representative

Removable Interior Grilles:
- Bars: Pine wood 3/4″ (19) or 1 1/8″ (29) wide bars.
- Pattern Rectangular, custom lite layout available, contact your Marvin representative.

Grilles–between–the–Glass (GBG):
- 11/16″ (17) white contoured aluminum bar.
- Exterior Colors: Stone White, Arctic White, Bronze, Pebble Grey, Bahama Brown, Cashmere, Ebony, Evergreen, Sherwood Green, Sierra White, French Vanilla, Coconut Cream, and Wineberry*.
- Interior Colors: White is default. Optional colors: Bronze, Pebble Gray, and Sierra White.
- Optional flat aluminum bar available.

* The exterior GBG color is designed to best match the Marvin clad colors when used with LoĒ glass. The use of different types of glazing options may alter the exterior GBG color appearance.

Glass and Glazing:
- Standard glass is insulating LoĒ^2 272® with Argon.
- Glazing seal: Silicon glazed.
- Optional glazing available clear, LoĒ^3-366® with Argon, LoĒ-180™ with Argon, 1″ Tri–pane LoĒ-180™ with Argon, 1″ Tri–pane LoĒ^2 272® with Argon, 1″ Tri–pane LoĒ^2 272® with Krypton/Argon, 1″ Tri–pane LoĒ-180™ with Krypton/Argon, tints, tempered, sandblast obscure and others.
- Other glazing options with gas fill may be available for certain elevations, contact your Marvin representative.

Accessories:
- Installation brackets: 6 3/8″ (162), 9 3/8″ (238), or 15 3/8″ (391)
- Masonry brackets: 6″ (152) or 10″ (254)
- Aluminum drip cap: Color: Bahama Brown, Bronze, Evergreen, Pebble gray, White. Drip cap not designed to replace proper flashing
- Wood exterior mouldings: Brick Mould Casing, Flat casing.

Mulling:
- Not available as CE marked.

MINIMUM AND MAXIMUM MEASUREMENTS

Certified Minimum and Maximum Guidelines – MAGNUM TILT–TURN/INSWING CASEMENT		
Unit Type	Frame Size	
	Minimum Size Unit	Maximum Size Unit
Insulating Glass	20″ (508) x 24″ (610)	48″ (1219) x 72″ (1829)

Tilt–Turn Handle Location	
Frame Size Height 2 13/32″ Jamb Unit	Handle Height from Bottom of Sash
24″ – 27 7/8″ (610 – 708)	7 7/16″ (189)
27 15/16″ – 35 3/4″ (710 – 908)	11 1/16″ (281)
35 13/16″ – 43 5/8″ (910 – 1108)	17″ (432)
43 11/16″ – 51 1/2″ (1110 – 1308)	20 15/16″ (532)
51 9/16″ – 72″ (1310 – 1829)	22 7/8″ (581)

NOTE:
Tilt–Turn handle height dimension shown is from the bottom of the sash to the pivot point of the handle.
Inswing Casement handle pivot point location is centered on the top rail.

Tilt – Turn Size & Weight Limitation

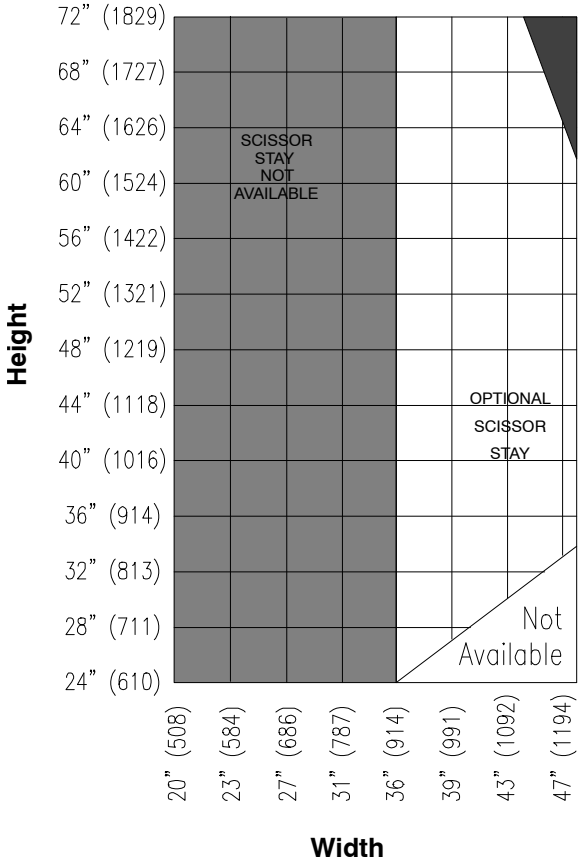

Legend

Units in this size range require additional scissor stay hardware.

This chart is based upon the outside measurement of unit without BMC or subsill and applies to 2 13/32″ (61) or 4 9/16″ (116) jamb units.

Operation

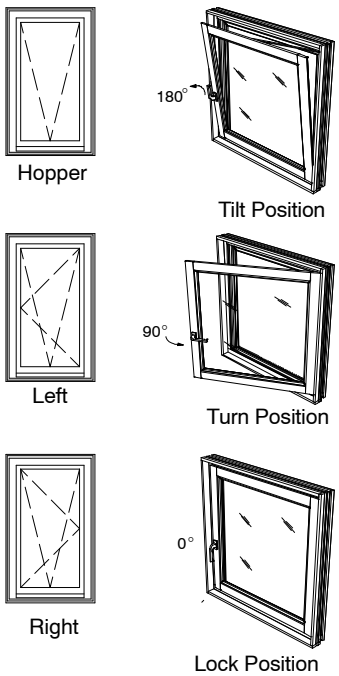

NOTE:
All operation as viewed from the exterior.

WOOD TILT–TURN/INSWING CASEMENT 2 13/32″ (61) JAMBS

Unit	Width		Height	
Masonry Opening to Rough Opening (without BMC)	+ 1/2″	(13)	+ 1/4″	(6)
Masonry Opening to Rough Opening (with BMC)	– 2 1/″	(–57)	– 1 1/8″	(–29)
Masonry Opening to OM of BMC	– 1/2″	(–13)	– 1/4″	(–6)
OM of BMC to Rough Opening	– 1 3/4″	(–44)	– 7/8″	(–22)
OM of Frame to Rough Opening	+ 1″	(25)	+ 1/2″	(13)
Glass Size to Rough Opening	+ 9″	(229)	+ 9 3/4″	(248)
Net Clear Opening to Rough Opening	+ 7 1/8″	(181)	+ 7 1/8″	(181)
Glass Size to OM of Sash	+ 5 3/16″	(132)	+ 5 3/16″	(132)
OM of Sash to Rough Opening	+ 3 13/16″	(97)	+ 4 9/16″	(116)
Daylight Opening to Glass Size	+ 1 1/8″	(29)	+ 1 1/8″	(29)
Daylight Opening to Rough Opening	+ 10 1/8″	(257)	+ 10 7/8″	(276)
OM of Screen to Rough Opening	+ 6 5/8″	(168)	+ 6 1/16″	(154)

WOOD TILT–TURN/INSWING CASEMENT 4 9/16″ (116) JAMBS

Unit	Width		Height	
Masonry Opening to Rough Opening (with BMC)	– 2 1/4″	(–57)	–1 1/8″	(–29)
Masonry Opening to OM of BMC	– 1/2″	(–13)	– 1/4″	(–6)
OM of BMC to Rough Opening	– 1 3/4″	(–44)	– 7/8″	(–22)
OM of Frame to Rough Opening	+ 1″	(25)	+ 1/2″	(13)
Glass Size to Rough Opening	+ 10″	(254)	+ 10 1/4″	(260)
Net Clear Opening to Rough Opening	+ 8 1/8″	(206)	+ 7 5/8″	(194)
Glass Size to OM of Sash	+ 5 3/16″	(132)	+ 5 3/16″	(132)
OM of Sash to Rough Opening	+ 4 13/16″	(122)	+ 5 1/16″	(129)
Daylight Opening to Glass Size	+ 1 1/8″	(29)	+ 1 1/8″	(29)
Daylight Opening to Rough Opening	+ 11 1/8″	(283)	+ 11 3/8″	(289)
OM of Screen to Rough Opening	+ 7 5/8″	(194)	+ 6 9/16″	(167)

SECTION DETAILS: OPERATING – 2 13/32″ (61) and 4 9/16″ (116) JAMBS

SCALE: 3″ = 1′ 0″ (76 = 305)

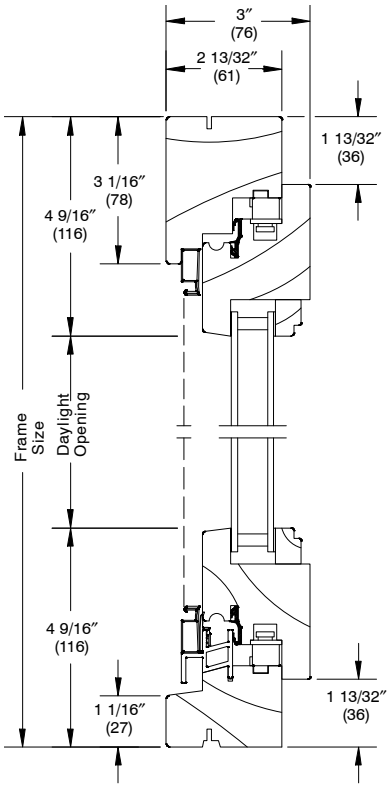

Head Jamb and Sill

Operating
2 13/32″ (61) Jambs

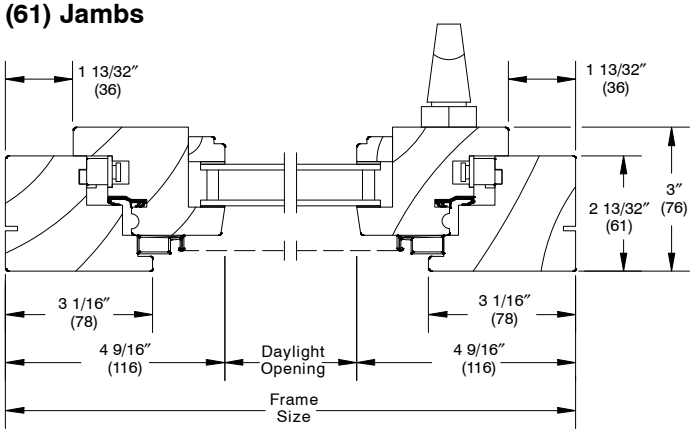

Jambs

Operating
4 9/16″ (116) Jambs

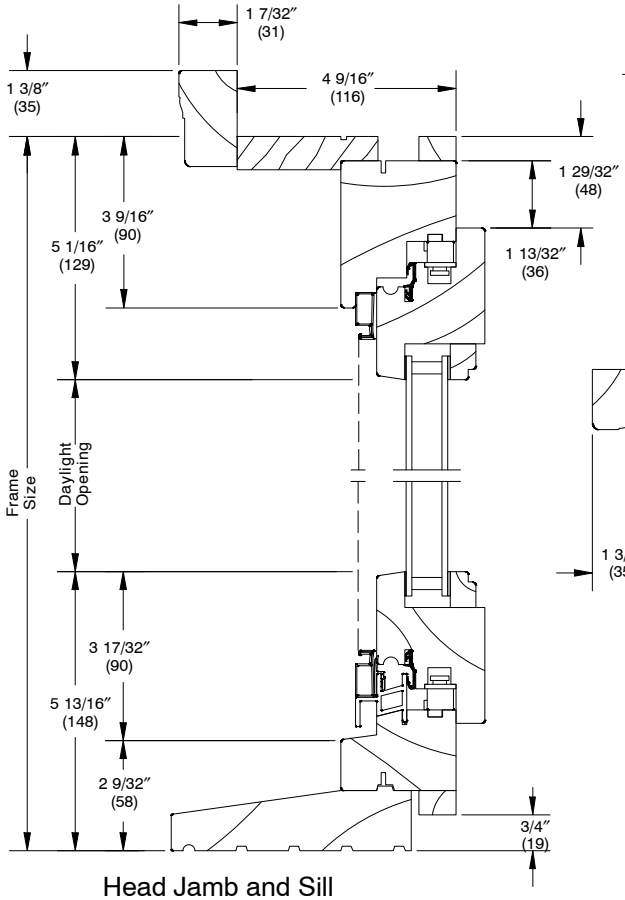

Head Jamb and Sill

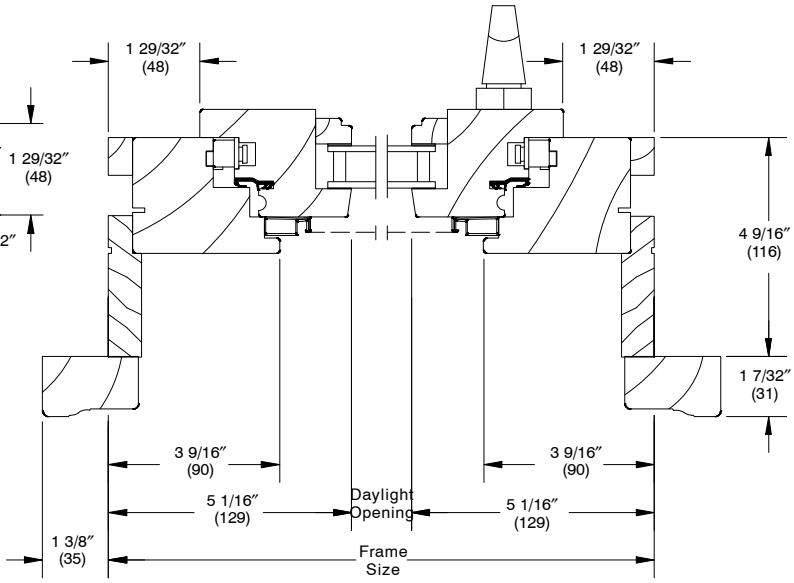

Jambs