CHAPTER 16

WOOD AND CLAD ULTIMATE SLIDING FRENCH DOOR

Table of Contents

	PAGE
History	**16.2**
Part Identification	
Wood Ultimate Sliding French Door – OX or XO	16.3
Wood Ultimate SFD – 3 Panel OXO, 3 Panel XOO, 4 Panel OXXO Jamb Detail	16.4
Wood Ultimate Sliding French Door – Interior Flat Oak Sill	16.5
Wood Ultimate Sliding French Door In–Sash Transom	16.6
Wood Ultimate Sliding French Door In–Sash Transom Jamb Detail	16.7
Wood Ultimate Sliding French Door Direct Glaze Transom	16.8
Wood Ultimate Sliding French Door Stationary	16.9
Clad Ultimate Sliding French Door – OX or XO	16.10
Clad Ultimate SFD – 3 Panel OXO, 3 Panel XOO,4 Panel OXXO Jamb Detail	16.11
Clad Ultimate Sliding French Door In–Sash Transom	16.12
Clad Ultimate Sliding French Door In–Sash Transom Jamb Detail	16.13
Clad Ultimate Sliding French Door Direct Glaze Transom	16.14
Clad Ultimate Sliding French Door Stationary	16.15
Parts	
Wood and Clad Ultimate Sliding French Door	16.16
Auxiliary Foot Bolt Kit	16.21
Wood Parts	16.22
Vinyl, Aluminum and Fiberglass Parts	16.23
Panel Replacement	16.24
Weather Strip	16.25
Screens and Screen Parts	16.27
Obsolete Parts	16.31
Obsolete Wood Parts	16.34
Obsolete Vinyl, Aluminum and Fiberglass Parts	16.36
Obsolete Panel Replacement	16.37
Obsolete Screens and Screen Parts	16.38
Discontinued (no longer available) Parts	16.40

ATTENTION:

- Specification and technical data are subject to change without notice.
- Numbers listed in parentheses ( ) are metric equivalents in millimeters rounded to the nearest whole number.

HISTORY

PRODUCED	UNIT TYPE	FEATURES OR CHANGES	STATUS
1991	Wood Sliding French Door (WSFD)	Introduced the wood Sliding French Door. Unit features no exposed nail or staple holes, multi-point locking system, solid brass handles and top hung screen. Introduced in-sash transom. Unit features matching sight lines.	Present
1992	WSFD	Simulated divided lite option introduced.	Present
1993	WSFD	Optional hardware introduced including antique brass, polished or brushed chrome and white handles. Screen auto-closer introduced. Rollers, guide bars and screen width reduced 3/8″.	Present
1994	WSFD	Direct glaze transoms offered for the Sliding French Door. Transoms feature sill designed for field mulling. Added standard sizes to in-sash transoms. Flat oak sill offered for interior applications.	Present
1995	Clad Sliding French Door (CSFD)	Introduced the clad Sliding French Door and matching in-sash transom. Unit features design similarity and options of the wood model with an extruded aluminum clad exterior.	Present
2000	WSFD, CSFD	1/31/00 Redesigned and standardized frame profiles and related parts.	Present
2002	WSFD, CSFD	3/02 Stone White becomes a standard color. Arctic White transitions to a select color. 8/0 height decreases by 2 1/2 inches.	Present
2002	WSFD, CSFD	5/02 New Ultimate hardware and screen options. New standard hardware and screen options. New frame components.	Present
2004	WSFD, CSFD	1/04 Added Oiled Rubbed Bronze and Satin Chrome to available hardware finishes.	Present
2004	WSFD, CSFD	4/12/04 Satin Nickel hardware finish introduced.	Present
2004	WSFD, CSFD	6/14/04 Wood and Clad Direct Glaze transom redesigned. Polished Chrome hardware finish retired.	Present
2005	Wood and Clad Ultimate Sliding French Door (WUSFD, CUSFD)	Sliding French Door becomes the Ultimate Sliding French Door. All handle finishes available for both 2 and 3 point lock options. Introduced Bronze Ultrex sill with Black Weather Strip.	Present
2005	WUSFD, CUSFD	6/27/05 Introduced Brass PVD and Satin Nickel PVD finishes to French door handles, and other miscellaneous parts.	Present
2006	WUSFD, CUSFD	7/24/06 Discontinued retro 6–5 height and replaced with 6–6 height. Frame OSM for 6–6 height is 3/4″ taller than 6–5 doors. Frame OSM for 6–6 width is 11/16″ wider (one panel), 1 3/8″ wider (two panel) and 2 1/16″ wider (three panel).	Present
2006	WUSFD, CUSFD	11/2006 Discontinued stationary panel top rail spacer (W8452) and replaced with a stationary bracket. Updated W7504 stationary panel head jamb cover profile.	Present
2007	WUSFD, CUSFD	2/20/07 Introduced raised and flat panels as a standard option for Marvin French Doors and Commercial Doors.	Present
2008	WUSFD, CUSFD	6/02/2008 Introduced charcoal high transparency screen mesh (CH HI–TRAN) as an option on all window and door products (including combinations).	Present
2008	CSFD	7/28/2008 Mixed grain Douglas fir is now a standard option.	Present
2009	All	3/23/2009 Added LoĒ^3-366™ as a standard option for all products. Added Cedro Macho as a standard option for all clad products.	Present
2009	WUSFD, CUSFD	5/26/2009 Introduced the new Low Profile Sill as an option to the Sliding Patio Door and Ultimate Sliding French Door.	Present
2010	All Doors	2/22/2010 Added Dark Bronze hardware finish to doors.	Present
2010	WUSFD, CUSFD	10/25/2010 Added 7–0 height.	Present
2011	All	04/25/2011 Added LoĒ-180™ as a standard option for all products. White painted interior finish option introduced for all product.	Present
2012	All	07/30/2012 Stave Core added to our description for current finger joint/edge glue construction of door panels. 10/29/2012 Interior Square Sticking/Glazing Bead option introduced. 12/17/2012 Introduced Clear interior finish option on all products.	Present

WOOD ULTIMATE SLIDING FRENCH DOOR
OPERATOR

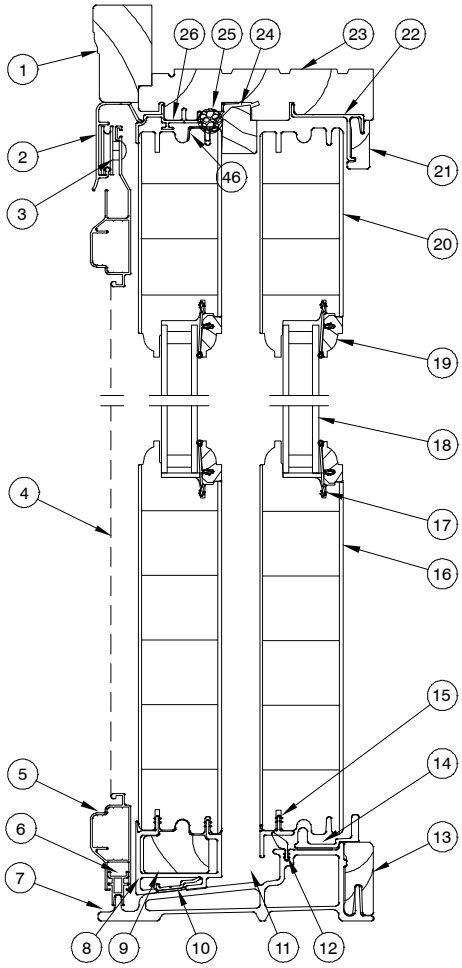

HEAD JAMB AND SILL DETAIL

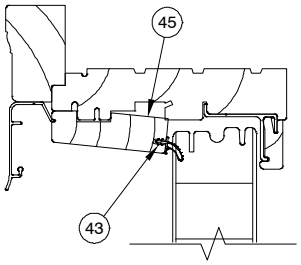

OPERATOR SIDE DETAIL

1. Top Brick Mould Casing
2. Screen Track
3. Screen Roller
4. Screen
5. Screen Frame
6. Screen Bottom Guide
7. Ultrex Sill
8. Leveling Block
9. Leveling Block Filler
10. Sill Stationary Panel Retaine
11. Sill Condensation Cover
12. Sill Weather Strip
13. Sill Liner
14. Sill Roller Track
15. Panel Drip
16. Bottom Rail
17. Glazing Bead
18. Insulating Glass
19. Glazing Cap
20. Top Rail
21. Panel Guide Cover
22. Panel Guide
23. Head Jamb
24. Stationary Panel Cover
25. Backer Rod
26. Stationary Panel Top Filler
27. Exterior Handle Assembly
28. Stationary Panel Interlock
29. Stationary Meeting Stile
30. Side Brick Mould Casing
31. Stationary Jamb Filler
32. Connecting Barb
33. Jamb
34. Stationary Jamb Cover
35. Stationary Jamb Stile
36. Operating Panel Interlock
37. Meeting Stile Weather Strip
38. Operating Meeting Stile
39. Interior Handle Assembly
40. Operating Locking Stile
41. Jamb Liner
42. Jamb Weather Strip
43. Parting Stop Weather Strip
44. Jamb Parting Stop
45. Head Jamb Parting Stop
46. Stationary Panel Bracket

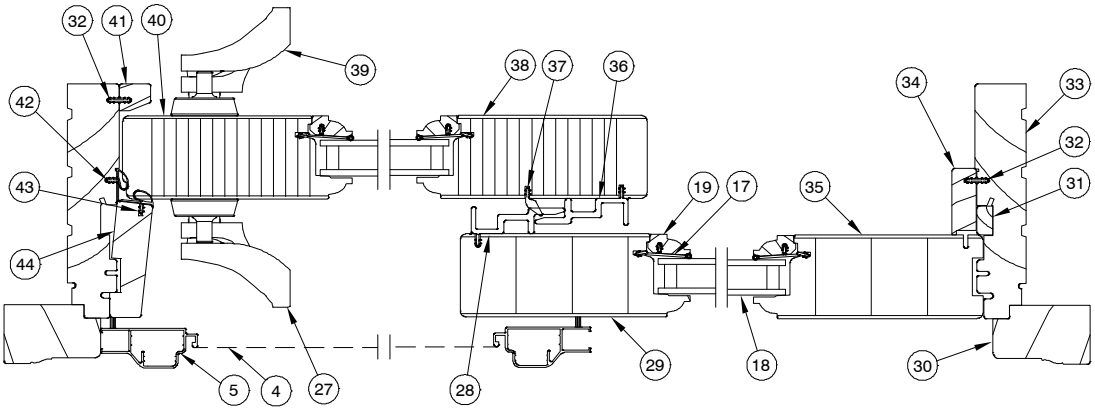

TWO PANEL OPERATING JAMB DETAIL
XO R

NOTE: Not to scale; specifications subject to change without notice.

WOOD ULTIMATE SLIDING FRENCH DOOR
JAMB DETAIL

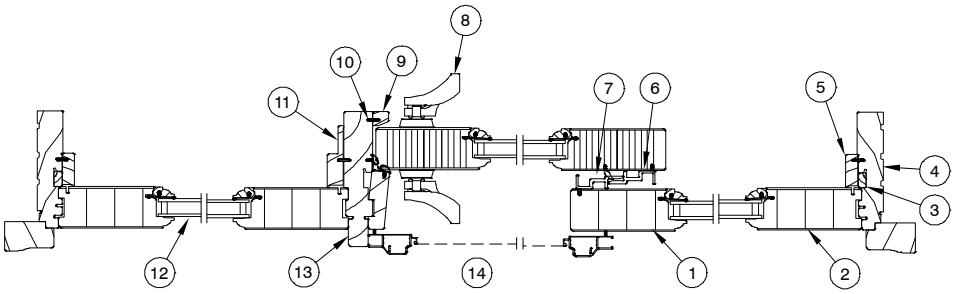

3 PANEL JAMB DETAIL – OXO R

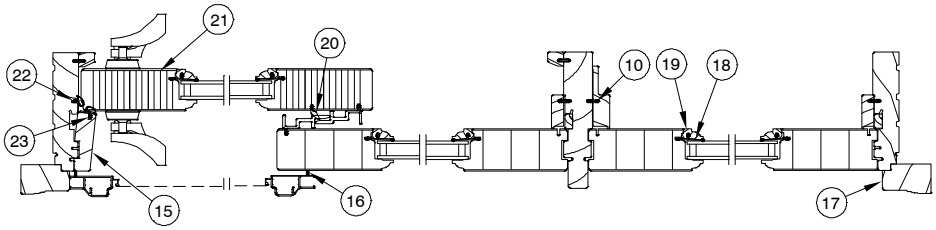

3 PANEL JAMB DETAIL – XOO R

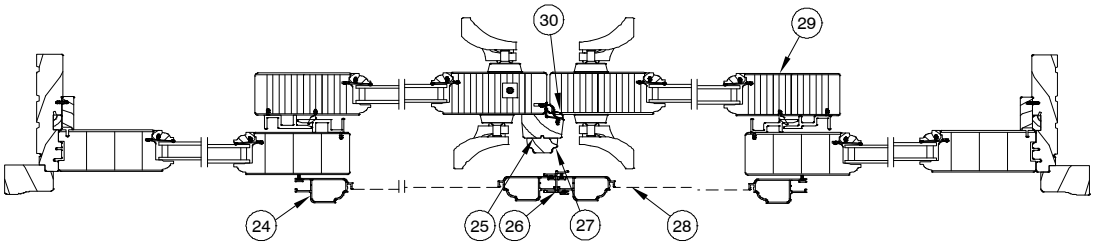

4 PANEL JAMB DETAIL – OXXO R

1. Stationary Meeting Stile
2. Stationary Jamb Stile
3. Stationary Panel Filler
4. Jamb
5. Stationary Jamb Cover
6. Operating Panel Interlock
7. Stationary Panel Interlock
8. Interior Handle Assembly
9. Jamb Liner
10. Connecting Barb
11. Center Jamb Cover
12. Insulating Glass
13. Center Jamb
14. Exterior Handle Assembly
15. Jamb Parting Stop
16. Screen Pile Weather Strip
17. Side Brick Mould Casing
18. Glazing Bead
19. Glazing Cap
20. Meeting Stile Weather Strip
21. Operating Locking Stile
22. Jamb Weather Strip
23. Parting Stop Weather Strip
24. Screen Frame
25. Mull Casing Bead
26. Screen Astragal
27. Mull Casing Cover
28. Screen
29. Operating Meeting Stile
30. Mull Casing Stile Weather Strip

NOTE: Not to scale; specifications subject to change without notice.

WOOD ULTIMATE SLIDING FRENCH DOOR WITH INTERIOR FLAT OAK SILL

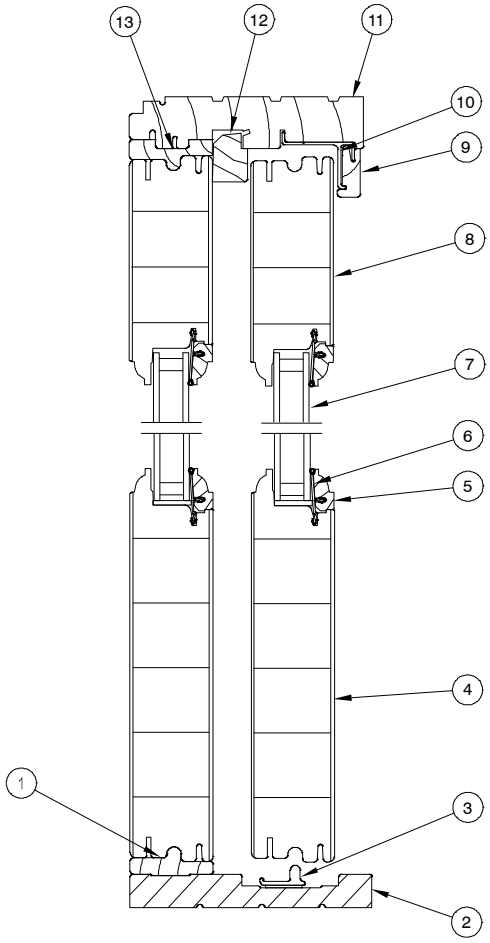

HEAD JAMB AND SILL DETAIL

1. Stationary Retaining Block
2. Interior Flat Sill
3. Sill Track
4. Bottom Rail
5. Glazing Cap
6. Glazing Bead
7. Insulating Glass
8. Top Rail
9. Panel Guide
10. Panel Guide Fastener
11. Head Jamb
12. Panel Top Track
13. Stationary Panel Top Filler
14. Head Jamb Parting Stop
15. Parting Stop Weather Strip

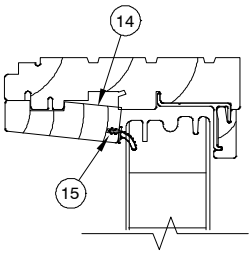

OPERATOR SIDE DETAIL

NOTE: Not to scale; specifications subject to change without notice.

WOOD ULTIMATE SLIDING FRENCH DOOR
IN–SASH TRANSOM

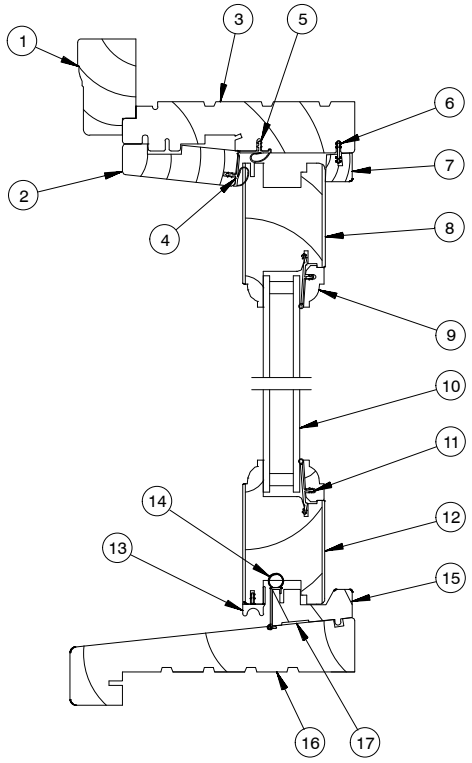

HEAD JAMB AND SILL DETAIL

1. Top Brick Mould Casing
2. Head Jamb Parting Stop
3. Head Jamb
4. Parting Stop Weather Strip
5. Head Jamb Weather Strip
6. Connecting Barb
7. Interior Cover
8. Top Rail
9. Glazing Cap
10. Insulating Glass
11. Glazing Bead
12. Bottom Rail
13. Panel Drip
14. Sill Filler Weather Strip
15. Sill Filler
16. Transom Sill
17. Foam Tape
18. Stile
19. Jamb Weather Strip
20. Jamb
21. Side Brick Mould Casing
22. Parting Stop Weather Strip
23. Jamb Parting Stop

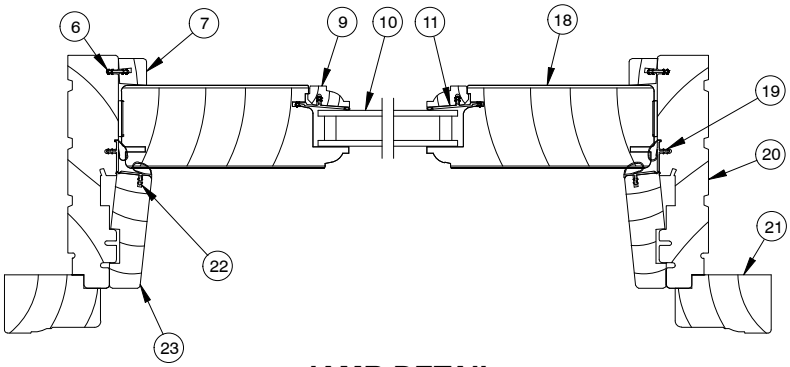

JAMB DETAIL

NOTE: Not to scale; specifications subject to change without notice.

WOOD ULTIMATE SLIDING FRENCH DOOR
JAMB DETAIL IN–SASH TRANSOM

1. Side Brick Mould Casing
2. Jamb
3. Connecting Barb
4. Interior Cover
5. Glazing Bead
6. Glazing Cap
7. Center Jamb
8. Insulating Glass
9. Center Stile
10. Jamb Weather Strip
11. Side Jamb Parting Stop
12. Parting Stop Weather Strip
13. Stile Weather Strip
14. Astragal
15. Stile
16. Mull Casing Weather Strip
17. Mull Casing Base
18. Mull Casing Cover

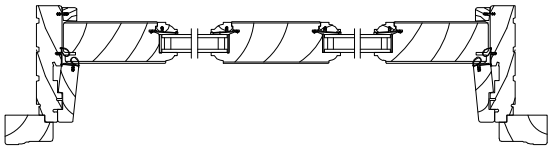

2 PANEL JAMB DETAIL

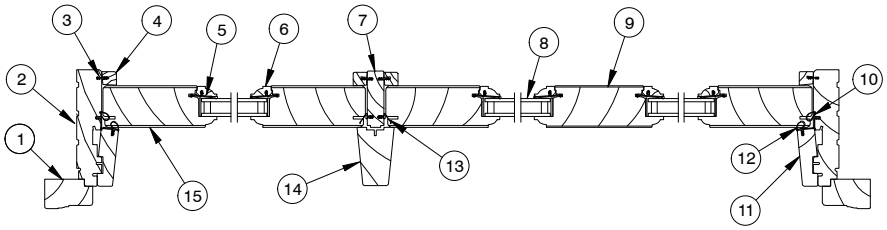

3 PANEL JAMB DETAIL

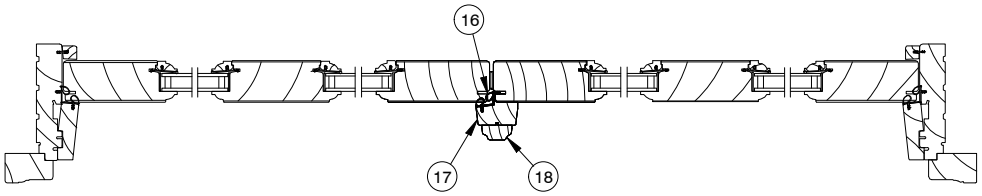

4 PANEL JAMB DETAIL

NOTE: Not to scale; specifications subject to change without notice.

WOOD ULTIMATE SLIDING FRENCH DOOR TRANSOM
DIRECT GLAZE

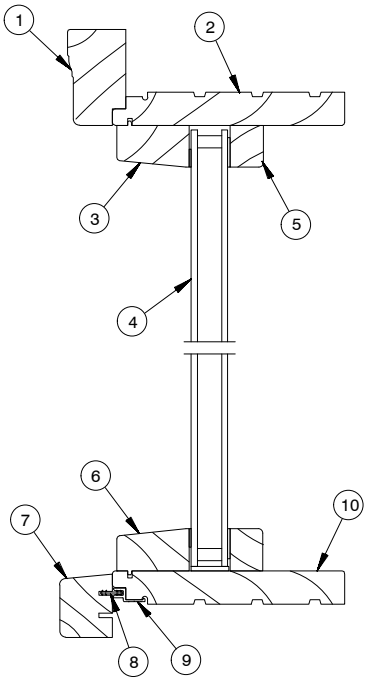

HEAD JAMB
AND SILL DETAIL

1. Head Jamb Brick Mould Casing
2. Head Jamb
3. Head Jamb Parting Stop
4. Insulating Glass
5. Glazing Bead
6. Sill Parting Stop
7. Sill Nose
8. Connecting Barb
9. Mull Fastener
10. Sill
11. Jamb Brick Mould Casing
12. Jamb
13. Jamb Parting Stop

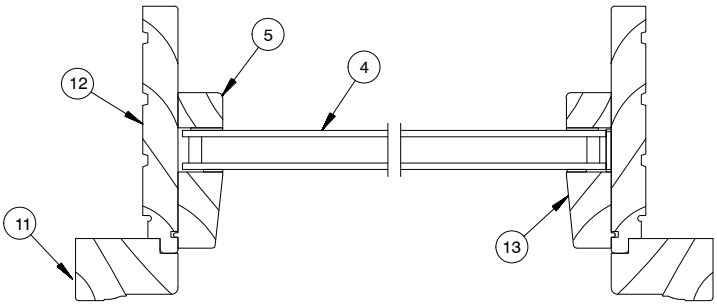

JAMB DETAIL

NOTE: Not to scale; specifications subject to change without notice.

WOOD ULTIMATE SLIDING FRENCH DOOR
STATIONARY

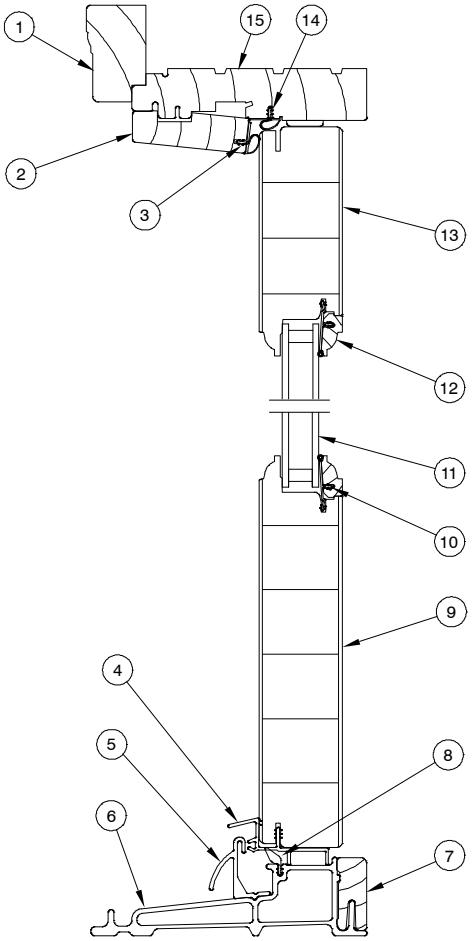

1. Top Brick Mould Casing
2. Head Jamb Parting Stop
3. Parting Stop Weather Strip
4. Panel Drip
5. Hydro Optimizer
6. Ultrex Sill
7. Sill Liner
8. Sill Weather Strip
9. Bottom Rail
10. Glazing Bead
11. Insulating Glass
12. Glazing Cap
13. Top Rail
14. Head Jamb Weather Strip
15. Head Jamb
16. Parting Stop Weather Strip
17. Jamb Parting Stop
18. Side Brick Mould Casing
19. Jamb
20. Jamb Weather Strip

HEAD JAMB AND SILL DETAIL

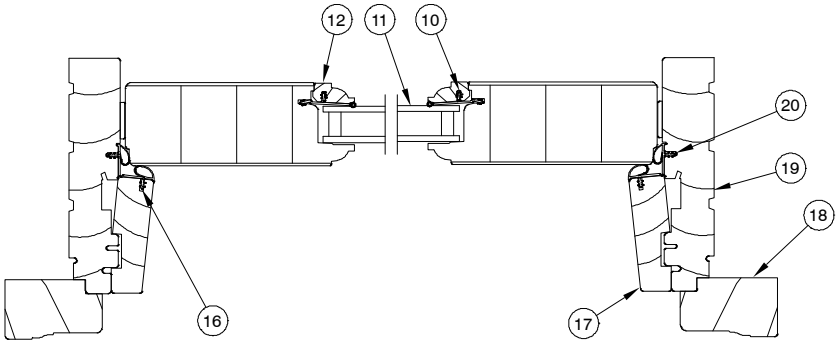

JAMB DETAIL

NOTE: Not to scale; specifications subject to change without notice.

CLAD ULTIMATE SLIDING FRENCH DOOR
XO

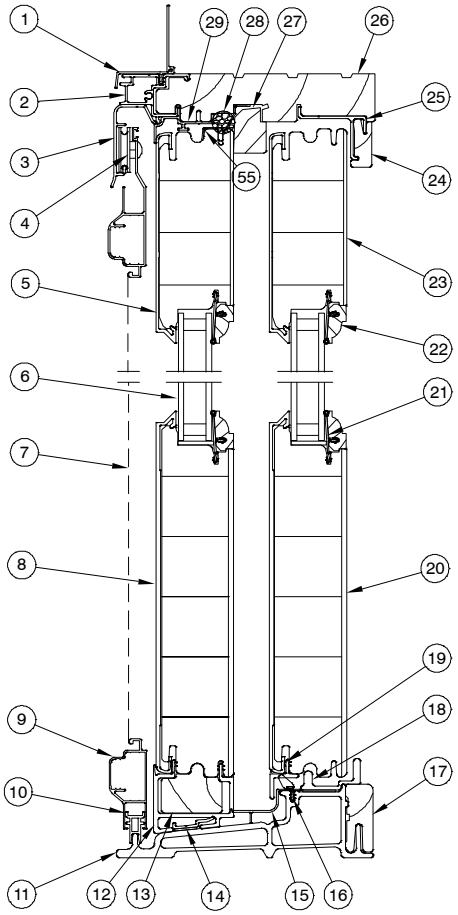

HEAD JAMB AND SILL DETAIL

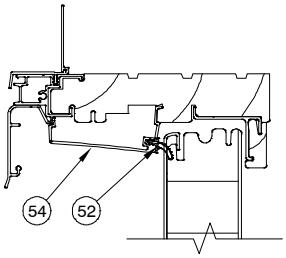

OPERATOR SIDE DETAIL

1. Head Jamb Nailing Fin/Drip Cap
2. Head Jamb Cladding
3. Screen Track
4. Screen Roller
5. Top Rail Cladding
6. Insulating Glass
7. Screen Mesh
8. Bottom Rail Cladding
9. Screen Frame
10. Screen Guide Bar
11. Sill
12. Leveling Block
13. Leveling Block Filler
14. Sill Stationary Panel Retainer
15. Sill Condensation Cover
16. Sill Weather Strip
17. Sill Liner
18. Sill Roller Track
19. Panel Drip
20. Bottom Rail
21. Glazing Bead
22. Glazing Cap
23. Top Rail
24. Panel Guide Cover
25. Panel Guide
26. Head Jamb
27. Stationary Panel Cover
28. Backer Rod
29. Stationary Panel Top Filler
30. Jamb Nailing Fin
31. Jamb Cladding
32. Exterior Handle Assembly
33. Edge Cover
34. Screen Pile Weather Strip
35. Stationary Meeting Stile Cladding
36. Stationary Meeting Stile
37. Stationary Jamb Stile Cladding
38. Stationary Jamb Stile
39. Jamb
40. Stationary Jamb Filler
41. Connecting Barb
42. Stationary Jamb Cover
43. Operator Panel Interlock
44. Meeting Stile Weather Strip
45. Stationary Panel Interlock
46. Operating Meeting Stile Cladding
47. Operating Locking Stile Cladding
48. Interior Handle Assembly
49. Jamb Liner
50. Operating Locking Stile
51. Jamb Weather Strip
52. Parting Stop Weather Strip
53. Jamb Parting Stop
54. Head Jamb Parting Stop
55. Stationary Panel Bracket

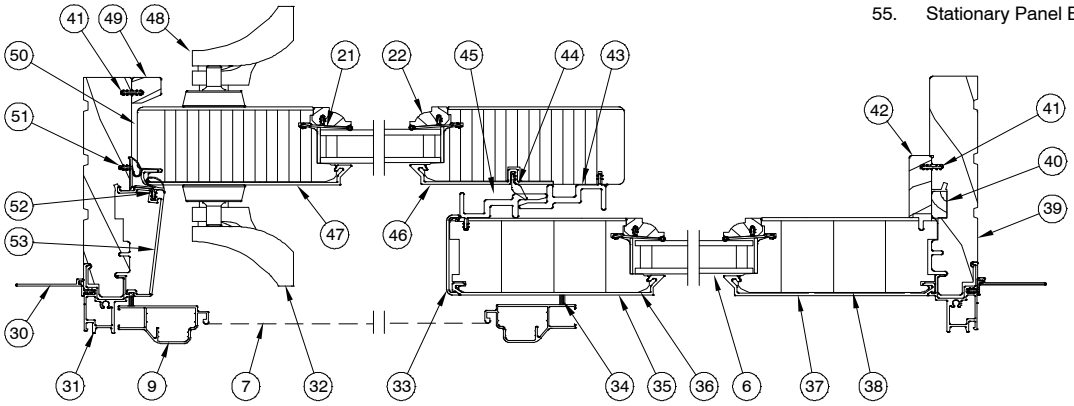

TWO PANEL OPERATING JAMB
XO R

NOTE: Not to scale; specifications subject to change without notice.

CLAD ULTIMATE SLIDING FRENCH DOOR
JAMB DETAIL

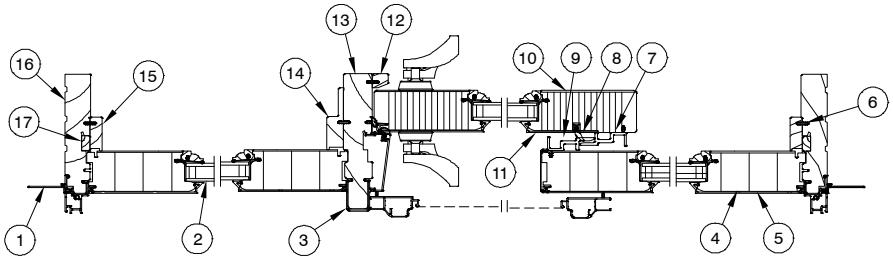

3 PANEL OPERATING JAMB – OXO R

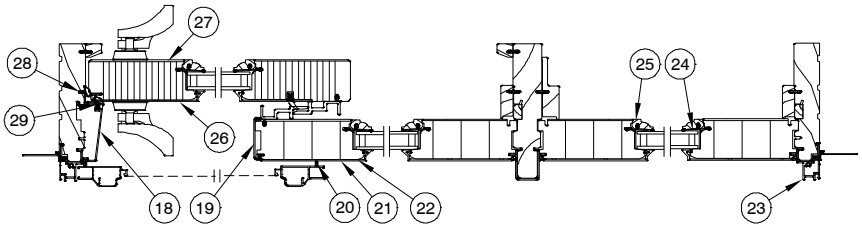

3 PANEL OPERATING JAMB – XOO R

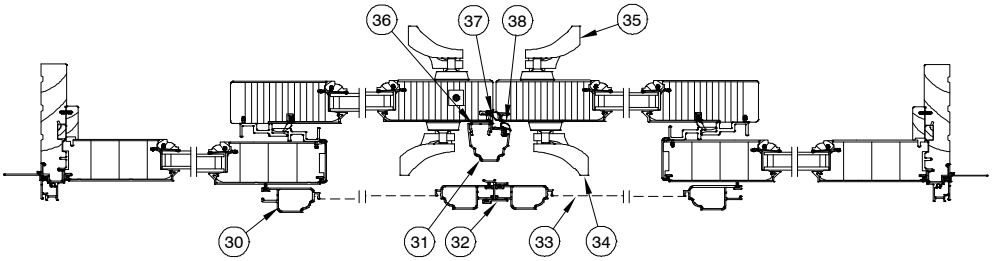

4 PANEL OPERATING JAMB – OXXO R

NOTE: Not to scale; specifications subject to change without notice.

1. Jamb Nailing Fin
2. Insulated Glass
3. Center Jamb Cladding
4. Stationary Jamb Stile
5. Stationary Jamb Stile Cladding
6. Connecting Barb
7. Operating Panel Interlock
8. Meeting Stile Weather Strip
9. Stationary Panel Interlock
10. Operating Meeting Stile Cladding
11. Operating Meeting Stile
12. Jamb Liner
13. Center Jamb
14. Center Jamb Cover
15. Stationary Jamb Cover
16. Jamb
17. Stationary Jamb Filler
18. Jamb Parting Stop
19. Edge Cover
20. Screen Pile Weather Strip
21. Stationary Meeting Stile Cladding
22. Stationary Meeting Stile
23. Jamb Cladding
24. Glazing Bead
25. Glazing Cap
26. Operating Locking Stile Cladding
27. Operating Locking Stile
28. Jamb Weather Strip
29. Parting Stop Weather Strip
30. Screen Frame
31. Astragal Cladding
32. Screen Astragal
33. Screen
34. Exterior Handle Assembly
35. Interior Handle Assembly
36. Astragal Base
37. Stile Weather Strip
38. Astragal Weather Strip

CLAD ULTIMATE SLIDING FRENCH DOOR
IN–SASH TRANSOM

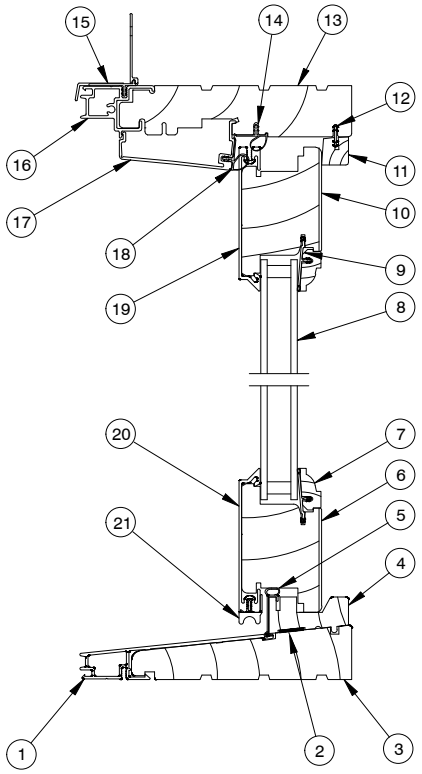

HEAD JAMB AND SILL DETAIL

1. Sill Cladding
2. Foam Tape
3. Sill
4. Sill Filler
5. Sill Filler Weather Strip
6. Bottom Rail
7. Glazing Cap
8. Insulating Glass
9. Glazing Bead
10. Top Rail
11. Interior Cover
12. Connecting Barb
13. Head Jamb
14. Head Jamb Weather Strip
15. Head Jamb Nailing Fin/Drip Cap
16. Head Jamb Cladding
17. Head Jamb Parting Stop
18. Parting Stop Weather Strip
19. Top Rail Cladding
20. Bottom Rail Cladding
21. Panel Drip
22. Jamb Parting Stop
23. Stile Cladding
24. Jamb Cladding
25. Jamb Nailing Fin
26. Jamb
27. Jamb Weather Strip
28. Stile

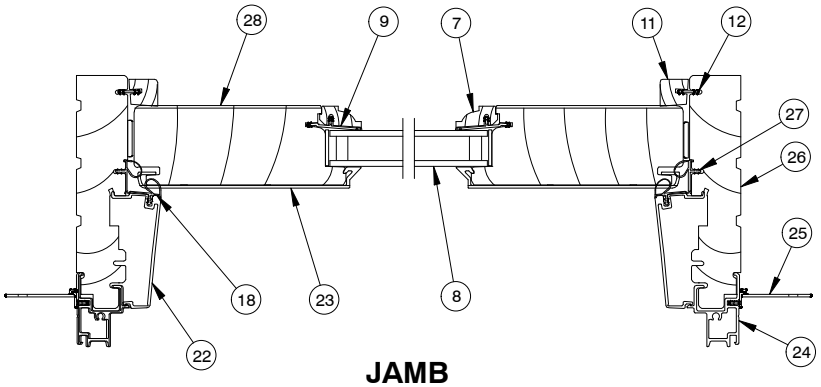

JAMB DETAIL

NOTE: Not to scale; specifications subject to change without notice.

CLAD ULTIMATE SLIDING FRENCH DOOR IN–SASH TRANSOM JAMB DETAIL

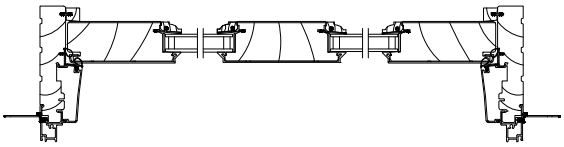

2 PANEL JAMB DETAIL

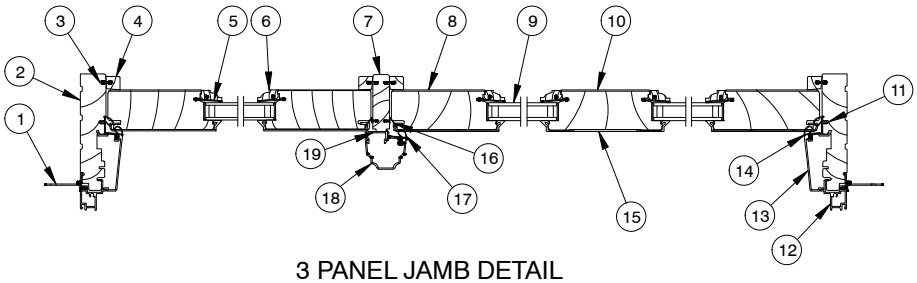

3 PANEL JAMB DETAIL

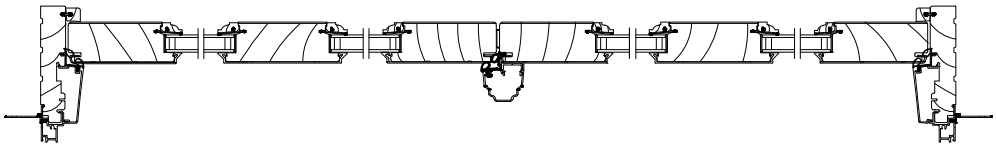

4 PANEL JAMB DETAIL

1. Jamb Nailing Fin
2. Jamb
3. Connecting Barb
4. Interior Cover
5. Glazing Bead
6. Glazing Cap
7. Center Jamb
8. Stile
9. Insulated Glass
10. Center Stile
11. Jamb Weather Strip
12. Jamb Cladding
13. Side Jamb Parting Stop
14. Parting Stop Weather Strip
15. Center Stile Cladding
16. Stile Weather Strip
17. Astragal Weather Strip
18. Astragal
19. Astragal Base

NOTE: Not to scale; specifications subject to change without notice.

CLAD ULTIMATE SLIDING FRENCH DOOR
DIRECT GLAZE TRANSOM

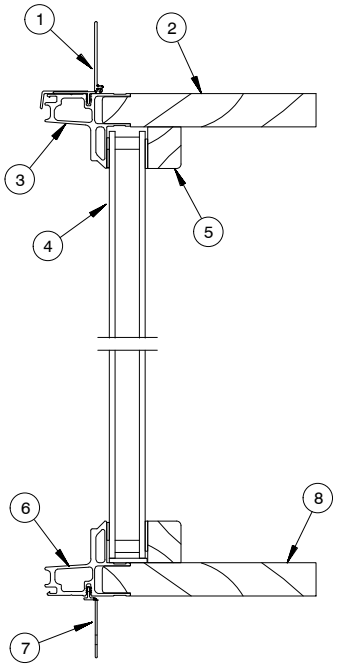

HEAD JAMB AND SILL DETAIL

1. Head Jamb Nailing Fin/Drip Cap
2. Head Jamb
3. Head Jamb Cladding
4. Insulated Glass
5. Glazing Bead
6. Sill Cladding
7. Sill Nailing Fin
8. Sill
9. Jamb Cladding
10. Jamb Nailing Fin
11. Jamb

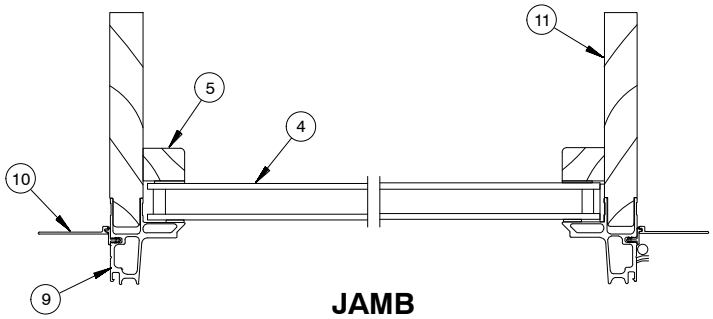

JAMB DETAIL

NOTE: Not to scale; specifications subject to change without notice.

CLAD ULTIMATE SLIDING FRENCH DOOR
STATIONARY

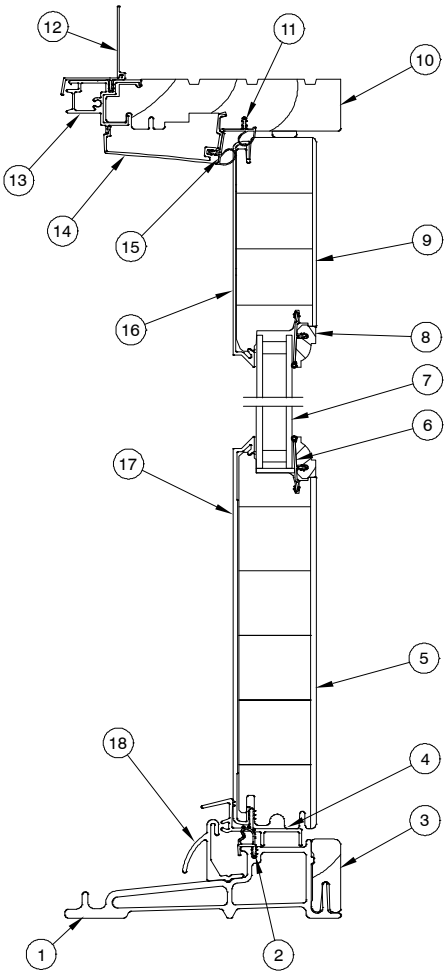

1. Sill
2. Sill Weather Strip
3. Sill Liner
4. Stationary Panel Drip
5. Bottom Rail
6. Glazing Bead
7. Insulating Glass
8. Glazing Cap
9. Top Rail
10. Head Jamb
11. Head Jamb Weather Strip
12. Head Jamb Nailing Fin/Drip Cap
13. Head Jamb Cladding
14. Head Jamb Parting Stop
15. Parting Stop Weather Strip
16. Top Rail Cladding
17. Bottom Rail Cladding
18. Hydro Optimizer
19. Jamb Cladding
20. Stile Cladding
21. Jamb Parting Stop
22. Jamb Nailing Fin
23. Jamb
24. Jamb Weather Strip
25. Stile

HEAD JAMB
AND SILL DETAIL

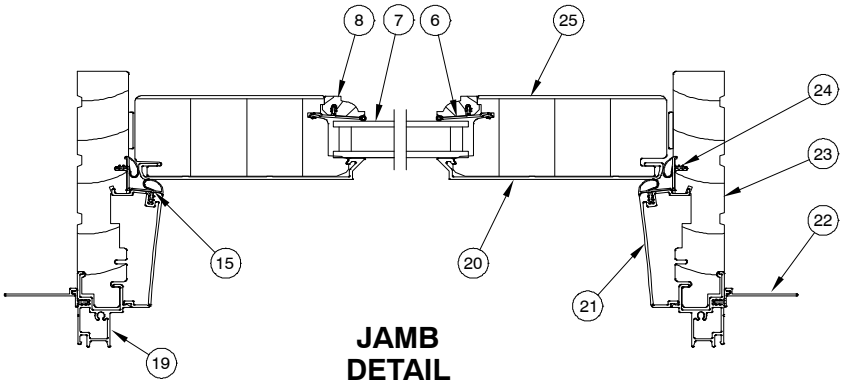

JAMB
DETAIL

NOTE: Not to scale; specifications subject to change without notice.

ILLUSTRATION *NOT TO SCALE*	DESCRIPTION	OPER./COLOR	PART NO.
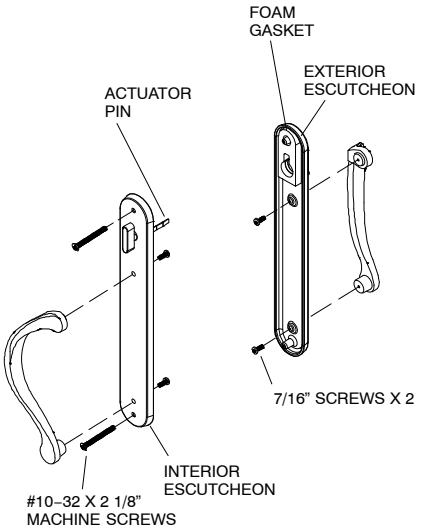	**Handle, Non–Keyed***	**Wide*** Antique Brass Satin Chrome Oil Rubbed Bronze ORBZ PVD Brass PVD Satin Nickel PVD **Narrow*** Satin Taupe Dark Bronze White	 10830061 10830042 10830107 10830089 10830074 10830083 10830070 10830203 10830137
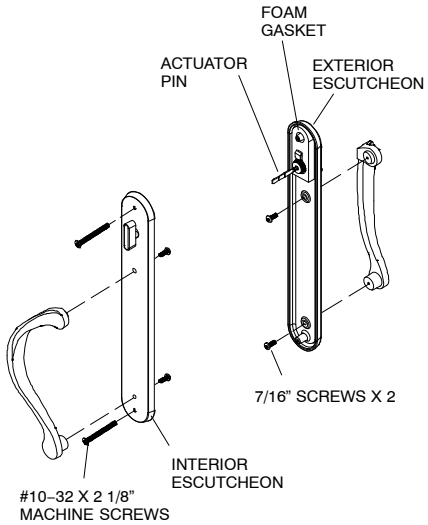	**Handle, Keyed***	**Wide*** Antique Brass Satin Chrome Oil Rubbed Bronze ORBZ PVD Brass PVD Satin Nickel PVD **Narrow*** Satin Taupe Dark Bronze White	 10830066 10830043 10830106 10830100 10830073 10830109 10830071 10830119 10830136
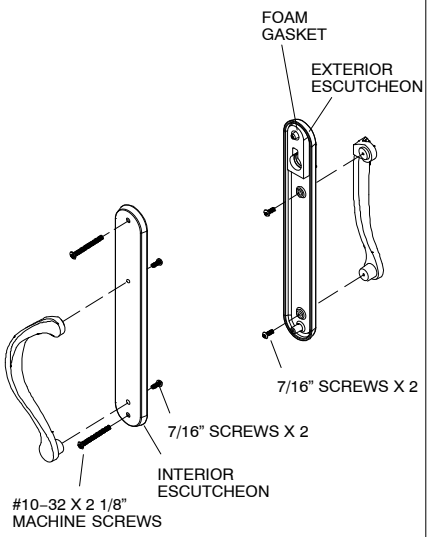	**Inactive Handle***	**Wide*** Antique Brass Satin Chrome Oil Rubbed Bronze ORBZ PVD Brass PVD Satin Nickel PVD **Narrow*** Satin Taupe Dark Bronze White	 10830078 10830044 10830108 10830025 10830081 10830082 10830072 10830204 10830138

* Wide escutcheon 1 7/8″ x 12 1/2″Narrow escutcheon 1 3/8″ x 12 1/2″

ILLUSTRATION *NOT TO SCALE*	DESCRIPTION	OPER./COLOR	PART NO.
	Escutcheon Adaptor For Inactive Handle *Includes:* *1 – #10–32x7/16 hex drive panhead stainless steel screw (00143047)*	Zinc Diecast	00143048
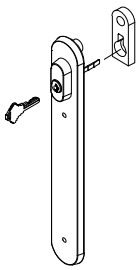	**Escutcheon Plate, Keyed** Non-Handed *Includes:* *1 – Escutcheon plate with keyed cylinder* *2 – Keys* *1 – Exterior escutcheon plate gasket*	**Wide** Brass **Narrow** Satin Taupe	 11830082 11830083
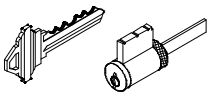	**Key Cylinder** (Schlage “C” keyway) For service replacement only.	Brass Face Chrome Face	00142000 00142001
	Lug seals		00142046
	#10–32 x 2 1/8″ Phillips ovalhead machine screw	Antique Brass White Satin Chrome Oil Rubbed Bronze Brass PVD Satin Taupe Satin Nickel PVD	00143038 00143036 10840031 10840032 11800615 11800616 11801020
	Sill Stationary Panel Bracket for French Door Transom MISC 0686 *Includes:* *1 – Sill stationary panel bracket* *2 – #8x5/8″ panhead wood screw, (11800780)*	Beige	11130358

ILLUSTRATION *NOT TO SCALE*	DESCRIPTION	OPER./COLOR	PART NO.
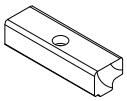	**Bumper Block, Head Jamb or Sill**		75151605
	Rubber Bumper	Beige Black	02101000 02101006
 (2 point shown)	**Multi Point Lock** *Includes:* *1 – Multi Point lock assembly* *2 pt lock – 5–#8x1 1/2″ Phillips flathead stainless steel (11800850)* *3 pt lock – 5–#8x1 1/2″ Phillips flathead stainless steel (11800850)*	2 pt. lock / SS 3 pt. lock / SS	05700317 05700318
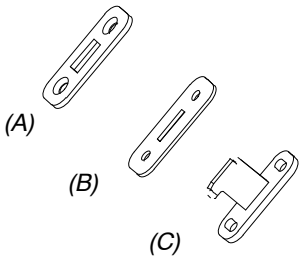 *(A)* *(B)* *(C)*	**Plate Cover** *A – Plate Cover – 11860042*	Order components as needed per each application	
	Shim *B – Shim – 18900501* 3 required at center keeper and at bottom keeper on a 2 pt lock.		
	Strike Hook *C – Strike Hook – 11860041* Screws each: 11800648 – #8x2.5″ flathead screw 2 required per keeper when installed on inactive panel 11800645 – *#8x1″* flathead screw SS 2 required when installed on jamb. 11800647 – #8–32x1″ flathead machine screw, 2 required when installed on center jamb. 11800647 – #8–32 thread, SS T–nut, 2 required when installed on center jamb.		

ILLUSTRATION *NOT TO SCALE*	DESCRIPTION	OPER./COLOR	PART NO.
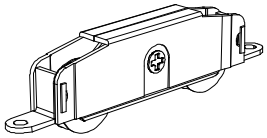	**Operator Panel Roller (Tandem-Adjustable)** *Includes:* *1 – Operator panel roller* *2 – #8x1″ Phillips flathead wood screws* *ZYD (11800810) SS (11800645)*	ZYD Stainless Steel	10820003 10820004
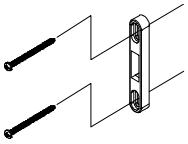	**Head Jamb Strike** Inactive Panel OXXO *Includes:* *1 – Strike* *2 – T nuts (05080250)* *2 – #8–32x3/4″ panhead machine screws (11800730)*	ZYD	10148195
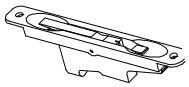	**Inactive Panel Flush Bolt** *Includes:* *1 – Flush bolt*		11101780
	Cover *Includes:* *1 – Cover* *2 – #8x 1″ Phillips flathead wood screws*	Aluminum	11860402
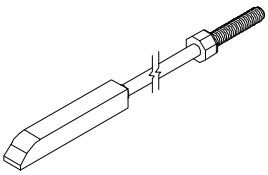	**Locking Rod** *Includes:* *1 – Locking rod with end bolt* **Height** — **Top Locking Rod Length** CN 6–8 ht — 11″ CN 8–0 ht — 27″	SS SS	N/A 05700185
	Roller Adjustment Plug	Bare Wood	01060619
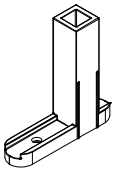	**End Bolt Guide** ***Inactive Panels – OXXO*** *Includes:* *1 – End Bolt guide* *1 – #8x1 1/2″ Phillips panhead wood screw (11865159)*		10815199
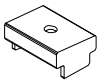	**Sill Plug, Transom** Clad only	CL	10500232
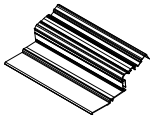	**Threshold Protector** 30″ length Pkg 20		11869675 11869676
	Sill Drain Filter		10500240

ILLUSTRATION *NOT TO SCALE*	DESCRIPTION	OPER./COLOR	PART NO.
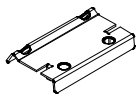	**Stationary Panel Head Jamb Bracket** *Includes:* *1 – Bracket* *4 – #8x1″ flat head screws (11800810)*	Galvanized steel	11860213
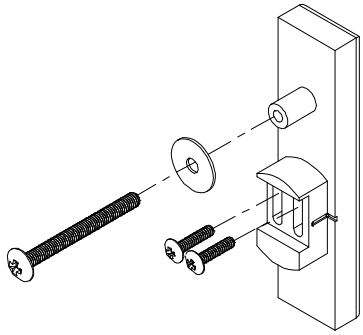	**Construction Lock Assembly** For Marvin residential swinging and sliding doors with standard locks. *Includes:* *1 – Construction Lock Cover* *1 – Construction Lock Hole Cover* *1 – Washer* *2 – #6–32 X 5/8″ Phillips TH screws* *1 – #10–32 X 2″ Phillips TH screw*	Each 25/Box	18450200 18450198
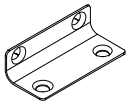	**Stationary Sash to Jamb Bracket** *Includes:* *1 – Stationary bracket* *2 – #7 x 7/8″ flathead (11800758)* *2 – #7 x 1 1/4″ flathead (11807113)*	Galvanized Steel	11841001
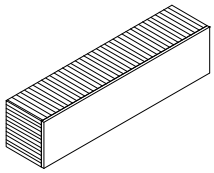	**Dust Block, Low Profile Sill**		10500296

AUXILIARY FOOT BOLT KIT

SLIDING DOOR AUXILIARY FOOT BOLT KIT

Includes:

1– Foot Bolt Assembly
(Foot Bolt (a), Lock Plate Assembly (c), #8 x 2 3/4″ Screws (d), Installation Template (b), and Installation Instructions)

1 – Bumper Stop (e)

1 – #8 x 1 1/2″ Screw (f)

1 – Roller Adjustment Plug (g)

COLOR/CONFIGURATION

Species	White / XO	White / OX	Beige / XO	Beige / OX	Bronze / XO	Bronze / OX
Pine	11101760	18900611	11101761	18900612	11101762	18900613
Cherry	18900614	18900617	18900615	18900618	18900616	18900619
Vert Grain Douglas Fir	18900620	18900623	18900621	18900624	18900622	18900625
Mix Grain Douglas Fir	18900638	18900641	18900639	18900642	18900640	18900643
Oak	18900632	18900635	18900633	18900636	18900634	18900637
Mahogany/Cedro Macho	18900626	18900629	18900627	18900630	18900628	18900631

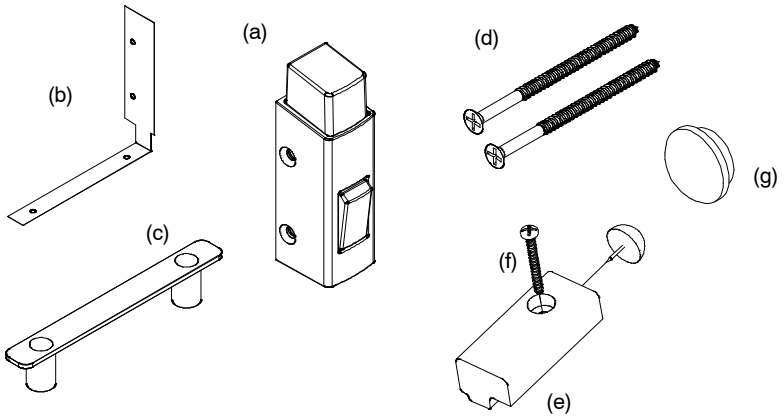

REPLACEMENT WOOD PARTS

CURRENT REPLACEMENT WOOD PARTS

	Clad	Wood
Stationary Panel Top Spacer*	W8452*	W8452*
Stationary Panel Bottom Spacer	W8643	W8643
Stationary Jamb Cover	W7535	W7535
Screen Track Filler	– – –	W5221
Leveling Block Filler	W8270	W8270
Jamb Liner	W7536	W7536
Center Jamb Cover	W7534	W7534
Sill Liner	W2528	W2528
Panel Guide	W8040	W8040
Head Jamb and Jamb Parting Stop	– – –	W6535
Astragal Cover and Transom Mull Cover	– – –	W7554
Exterior Center Jamb (Transom)	– – –	W7519
Interior Cover (Transom)	W7527	W7527
Mull Casing Base	– – –	W1455
Mull Casing Cover	– – –	W7554
Sill Nosing (Transom)	– ––	W8653
Exterior Part Stop (Transom)	– ––	W8474
Stationary Panel Head Jamb Cover	W7504	– ––
Oak Sill Liner, Low Profile Sill	W10428	W10428
Bumper Stop Block, Low Profile Sill P# 71271003	W10302	W10302
NOTE: Replacement wood parts are supplied with connecting barb (where applicable).		

* Replaced with stationary bracket .

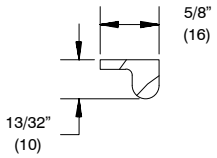

W8452*

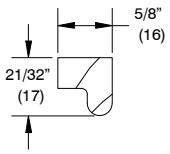

W8643

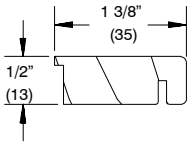

W7535

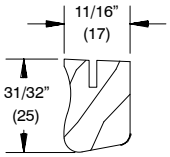

W5221

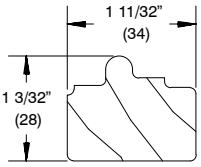

W8270

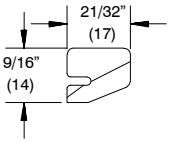

W7536

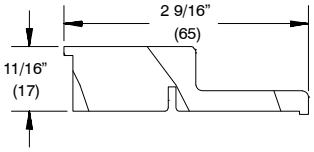

W7534

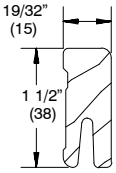

W2528

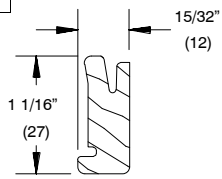

W8040

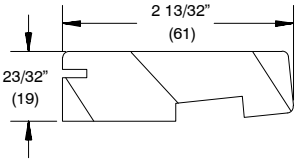

W6535

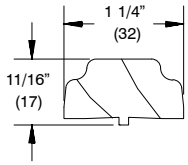

W7554

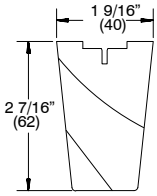

W7519

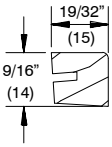

W7527

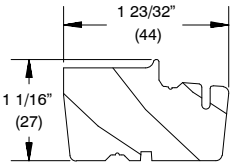

W1455

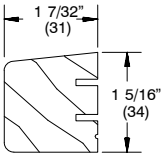

W8653

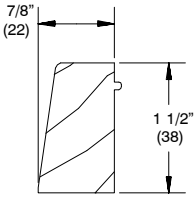

W8474

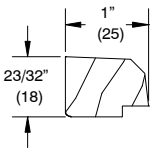

W7504

TO ORDER REPLACEMENT WOOD PARTS

When ordering replacement wood parts specify:

1. profile number;
2. rough opening;
3. handing;
4. length;
5. finish.

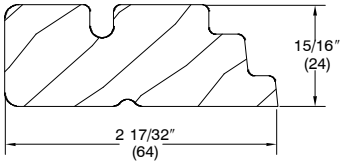

W10302 Part Number 71271003

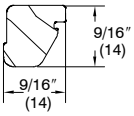

W10428

ORDERING REPLACEMENT VINYL, ALUMINUM OR FIBERGLASS PARTS FOR THE ULTIMATE SLIDING FRENCH DOOR

	Clad	Wood
Roller Track – Beige or Bronze	V1745	V1745
Leveling Block – Beige or Black	V1018	V1018
Panel Drip – Beige or Black	V1012	V1012
Condensation Cover – Beige or Bronze	V1131	– – –
Head Jamb, Jamb Parting Stop	A836	– – –
Astragal Base and Transom Center Jamb Base	A771	– – –
Astragal Cladding and Transom Center Jamb Cladding	A772	– – –
Ultrex Sill – Beige or Bronze	F256	F256
Header Panel Guide Fastener	A1014	A1014
Stationary Meeting Stile Clad Edge Cover	A778	
Mull Fastener – Transom	A850	–––
Sill, Low Profile	F1223	F1223
Roller Track, Low Profile Sill – Beige or Bronze	V1846	V1846
Stat Panel Seal, Low Profile Sill – Beige or Bronze	V1865	V1865
Weather Strip, Interior, Low Profile Sill – Beige or Bronze	V1793	V1793
Panel Drip, Low Profile Sill – Beige or Bronze	V1823	V1823

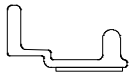
V1745

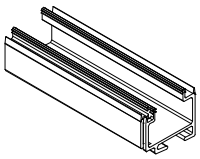
V1018

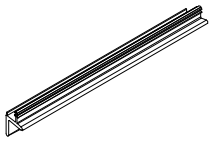
V1012

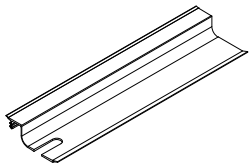
V1131

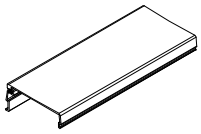
A836

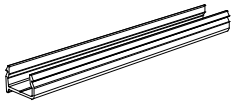
A771

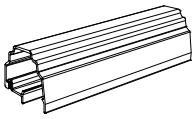
A772

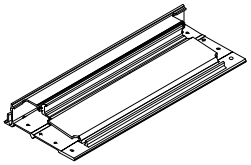
F256

A1014

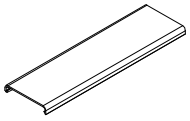
A778

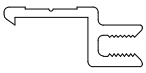
A850

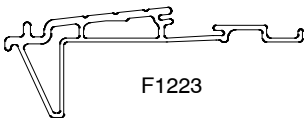
F1223

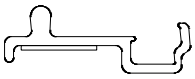
V1846

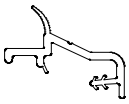
V1865

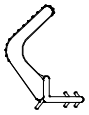
V1793

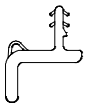
V1823

TO ORDER REPLACEMENT PARTS

When ordering replacement parts specify:

1. profile number;
2. rough opening;
3. length;
4. handing;
5. finish.

ORDERING REPLACEMENT PANELS FOR THE ULTIMATE SLIDING FRENCH DOOR

To order replacement panels specify:

1. OM of panel;
   NOTE: OM of panel does not include astragal.
2. active, inactive or stationary (specify astragal if applicable);
3. handing;
4. glazing;
5. finish;
6. Pre 2000;
7. 2 point or 3 point locking door.
8. glazing bead profile
   a. bevel
   b. square

CLAD AND WOOD SLIDING FRENCH DOOR (PRE 2000)

CN	Panel OSM		Panel DLO	
	Width	Height	Width	Height
2665	29 3/4″	75 3/4″	20 1/4″	62 7/8″
3065	35 3/4″	75 3/4″	26 1/4″	62 7/8″
4065	47 3/4″	75 3/4″	38 1/4″	62 7/8″
2668	31 1/4″	79″	21 3/4″	66 1/8″
3068	37 1/4″	79″	27 3/4″	66 1/8″
4068	49 1/4″	79″	39 3/4″	66 1/8″
8/0 Height		95″		82 1/8″

Units will have:
- 4 3/4″ top rails, 8 1/8″ bottom rails, 4 3/4″ stiles
- Mushroom bolts used until 2002

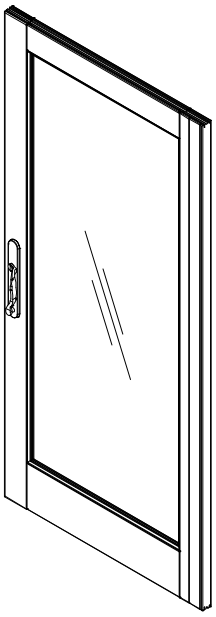

Wood Active Panel
Exterior View

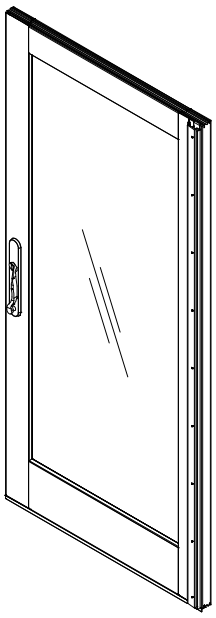

Clad Active Panel
Exterior View

NOTE: Panels feature no bore (standard).
Operating panels include sweep.
Stationary panels include leveling block.

ULTIMATE SLIDING FRENCH DOOR WEATHER STRIP

When ordering replacement weather strip specify:

1. quantity;
2. length;
3. part number;
4. description.

ILLUSTRATION *NOT TO SCALE*	DESCRIPTION	LENGTH	OPER./COLOR	PART NUMBER
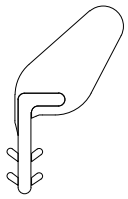	**Sill/Meeting Stile Weather strip** V1138	Specify Length	BG BZ	15910499 15910799
	Bulb Weather strip, Meeting Stile V192 Used until June 2010	192″ 192″	BG BK	(15900118) (15900117) Replaced by V1138
	Bulb Weather strip, Transom Sill Filler V775	Specify Length	BG BK	15610099 15610098
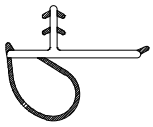	**Bulb Weather strip, Jambs, Astragal and Transom** V796	189 23/32″	BG BK	15173298 15173398
	Inactive Panel Stile Center V780	150″ 150″	BG BK	15174099 15174098
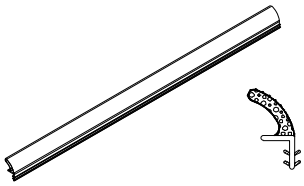	**Head Jamb, Parting Stop** V1194	144″ 150″	BG BK	17003599 15977999

WEATHER STRIP

ILLUSTRATION *NOT TO SCALE*	DESCRIPTION	LENGTH	OPER./ COLOR	PART NUMBER
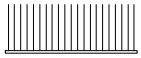	**Stationary Panel Cover Pile Dust Block** Adhesive backed 2 1/4″ x 1 3/8″ x 1/2″		GY	15600004
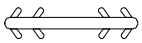	**Connecting Barb** V803 NOTE: Color may vary depending on current stock.	Specify Length		15812999
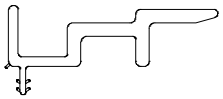	**Interlock, Stationary and Operating Panel** V1828 *Attached with #6x1 1/2″ Phillips panhead Stainless Steel screws*	116 5/16″ (2954)	BG BK	15215199 15216199
	Dust Block, Part Stop 1 3/8″ x 3/8″x 1/2″		GY BG	15600010 15600011
	Dust Block, Astragal or Panel 1 3/8″ x 1/4″x 3/8″			10500049

ORDERING REPLACEMENT SCREENS FOR ULTIMATE SLIDING FRENCH DOOR

Top hung screens are available with aluminum surround and charcoal colored fiberglass 18 x 16 screen mesh. Aluminum mesh (ultimate screens only) is available as an option in black, charcoal, bright aluminum or bright bronze. Determine the outside measurement of the existing screen. Find the sizes that correspond to the width and height indicated on the following chart. Surrounds are available in bronze, stone white, brown and pebble gray.

When ordering replacement screen specify:

1. size; – If there is no existing screen from which to obtain the OM of the screen, determine the size of the screen by using measurement conversion chart below. The daylight opening is the measurement of the visible glass.
2. color;
3. mesh type (if other than standard);
4. handing.

Sliding French Door
Manufactured March 2002 – Present

Daylight Opening to OM of Screen

Wood and Clad Standard Screen

Daylight Width + 8 1/16″ = OM Width of Screen
Daylight Height + 14″ = OM Height of Screen

Wood and Clad Ultimate Screen

Daylight Width + 8 1/16″ = OM Width of Screen
Daylight Height + 12 15/16″ = OM Height of Screen

Standard and Ultimate Screen Width

SIZE		OM–WIDTH
CN 5-0	(6-5 ht)	28 5/16″
CN 6-0	(6-5 ht)	34 5/16″
CN 8-0	(6-5 ht)	46 5/16″
CN 5-0	(6-6 ht)	29″
CN 6-0	(6-6 ht)	35″
CN 8-0	(6-6 ht)	47″
CN 5-0	(68, 70, 80 ht)	29 13/16″
CN 6-0	(68, 70, 80 ht)	35 13/16″
CN 8-0	(68, 70, 80 ht)	47 13/16″

Standard Screen Height

SIZE	OM–HEIGHT
CN 6-5	76 7/8″
CN 6-6	77 5/8″
CN 6-8	80 1/8″
CN 7–0	84 1/8″
CN 8-0	93 5/8″

Ultimate Screen Height

SIZE	OM–HEIGHT
CN 6–5	75 13/16″
CN 6–6	76 9/16″
CN 6–8	79 1/16″
CN 7–0	83 1/16″
CN 8–0	92 9/16″

NOTE: Standard screen available on 2–3 Panels only in standard colors, fiberglass mesh and standard sizes only.

ULTIMATE SLIDING FRENCH DOOR SCREEN PARTS

The following parts are used on Ultimate Sliding French Door screens. When ordering replacement parts specify:

1. part number;
2. quantity.

ILLUSTRATION *NOT TO SCALE*	DESCRIPTION	OPER./COLOR	PART NO.
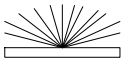	**Pile Weather strip, Screen Frame** 3/16″x 5/32″ Specify Length	GY	15607535
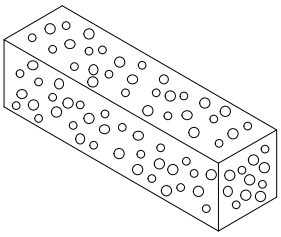	**Foam, Screen Bumper** 3/4″ x 3/4″ x 2 3/4″ Ultimate	WH	02540665
	Leaf Spring, Guide Bar Ultimate		10500238
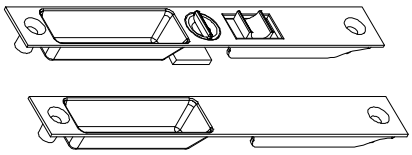	**Screen Handle (Interior and Exterior)** Ultimate	BK	05570522
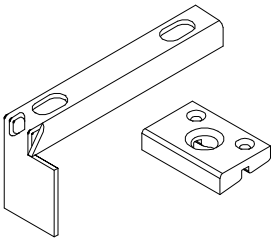	**Screen Stop and Sill Strike Package** Ultimate OXXO configurations only *Includes:* *1 – Screen stop* *1 – Sill strike* *2 – #4x1/2″flathead screws (sill strike)* *1– #6x1″ panhead screws (screen stop)* *Clad door screen stop needs one (1)* *#7 x 1/2″* self tapping metal screw #11800755 (not supplied with package.)		05700030
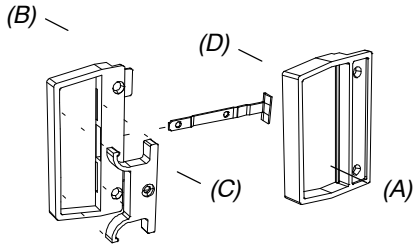	**Standard Screen Handle Assembly** *Includes:* *1 – Exterior handle – black (A)* *1 – Interior handle – black (B)* *1 – Slide (C)* *1 – Latch (D)* *1 – Rivets* *4 – Screws*		10830202

PARTS – SCREENS & SCREEN PARTS

ILLUSTRATION *NOT TO SCALE*	DESCRIPTION	OPER./COLOR	PART NO.
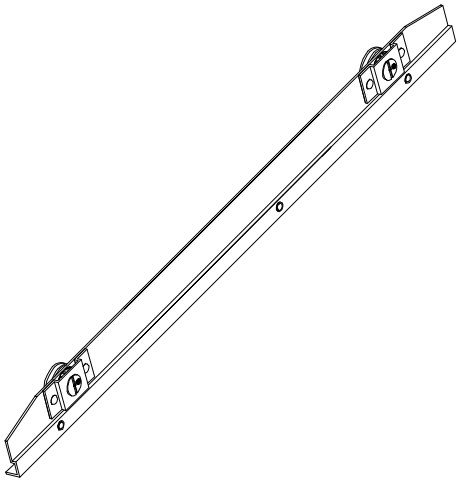 NOTE: Attached to screen with 10-24x1/2″ Phillips panhead machine screws (color matched: not included). If needed, order hardware package below.	**Top Hung Screen Roller Assembly** CN 5066 29″ CN 6066 35″ CN 8066 47″ CN 5068/70/80 29 13/16″ CN 6068/70/80 35 13/16″ CN 6668/70/80 38″ CN 8068/70/80 47 13/16″	SW	11369405 11369505 11369605 11375850 11375860 11375866 11375880
	CN 5066 29″ CN 6066 35″ CN 8066 47″ CN 5068/70/80 29 13/16″ CN 6068/70/80 35 13/16″ CN 6668/70/80 38″ CN 8068/70/80 47 13/16″	BZ	11369403 11369503 11369603 11370750 11370760 11370766 11370780
	CN 5066 29″ CN 6066 35″ CN 8066 47″ CN 5068/70/80 29 13/16″ CN 6068/70/80 35 13/16″ CN 6668/70/80 38″ CN 8068/70/80 47 13/16″	PB	11369402 11369502 11369602 11370550 11370560 11370566 11370580
	CN 5066 29″ CN 6066 35″ CN 8066 47″ CN 5068/70/80 29 13/16″ CN 6068/70/80 35 13/16″ CN 6668/70/80 38″ CN 8068/70/80 47 13/16″	BN	11369401 11369501 11369601 11370350 11370360 11370366 11370380
	CN 5066 29″ CN 6066 35″ CN 8066 47″ CN 5068/70/80 29 13/16″ CN 6068/70/80 35 13/16″ CN 6668/70/80 38″ CN 8068/70/80 47 13/16″	EG	11369404 11369504 11369604 11369950 11369960 11769966 11369980
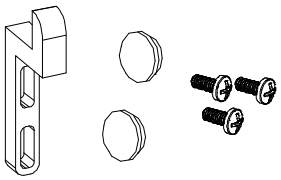	**Hardware Package Ultimate Screen** *Includes:* *1 – Strike* *2 – 5/8″ colored snap in plugs* *1 – Instruction sheet* *2 – #8x3/4″ Phillips panhead screws* *3 – #10x1/2″ colored Phillips panhead machine screws*	SW BZ PB BN EG GD	18900342 18900330 18900320 18900310 18900340 18900341
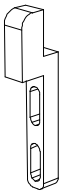	**Strike – Standard Screen** *Includes:* *1 – Strike* *2 – #4x3/4″ Phillips round head wood screws*		05570438

ORDERING REPLACEMENT SCREEN PARTS FOR THE ULTIMATE SLIDING FRENCH DOOR

	Clad	Wood
Ultimate Screen Guide Bar – Beige	V805	V805
Standard Screen Guide Bar	V552	V552
Ultimate Screen Astragal	A645	A645
Ultimate Screen Track* 2 wide unit, 1 track and 1 mounting bar 3-wide unit, 1 track, 1 mounting bar and 1 filler (filler is handed) 4-wide unit, 2 tracks and 2 mounting bars	A777*	A777*
Standard Screen Track	A1070	A1070

* 4–panel doors require two A777 tracks

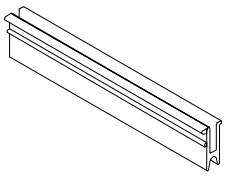

V805

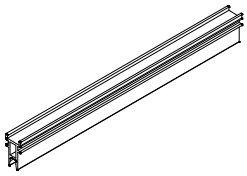

V552

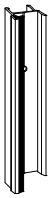

A645

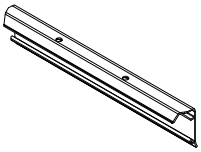

A1070

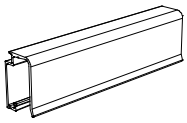

A777*

TO ORDER REPLACEMENT PARTS

When ordering replacement parts specify:

1. profile number;
2. rough opening;
3. length;
4. handing;
5. finish.

OBSOLETE PARTS

ILLUSTRATION *NOT TO SCALE*	DESCRIPTION	COLOR	PART NO.
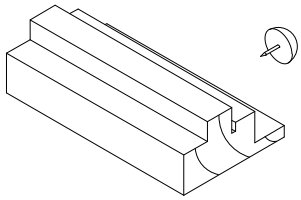	**Bumper Block, Head Jamb** Length: 4 1/2″ (with rubber bumper)		75151604
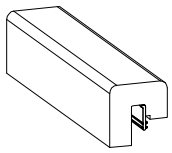	**Door Stop, Sill** V807 – 5″	Beige	18051311
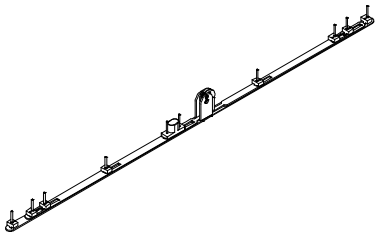	**Multi Lock Hardware Assembly** *Includes:* *1 – Multi lock assembly* *10 – #8x1 1/2″ Phillips flathead wood screws (hardware assembly)*	ZYD SS	10145001 10145002
	Offset Mushroom Bolt	ZYD SS	11100413 11100412
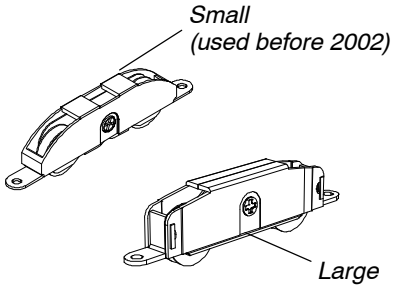	**Operator Panel Roller (Tandem-Adjustable)** *Includes:* *1 – Operator panel roller* *2 – #8x1″ Phillips flathead wood screws*	Small Small SS Large Large SS	10820000 05550411 10820001 10820002
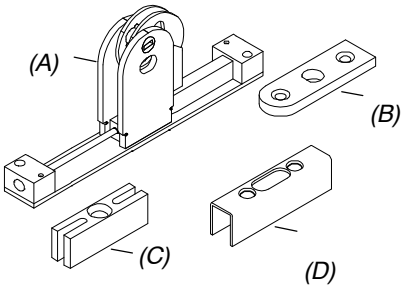	**Inactive Panel Hardware Assembly** *Includes:* *1 – Hardware assembly (A)* *1 – Guide plate (B)* *1 – Adjustable strike slide (C)* *1 – Strike cover (D)* *2 – #10–24x1 1/2″ Phillips flathead machine screws with T-nuts (strike)* *4 – #8x1 1/2″ Phillips flathead wood screws (hardware assembly and guide plate)*	ZYD SS	10510132 10510131
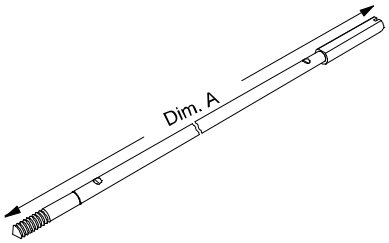	**Locking Rod** CN 6–5 ht. 34 5/32″ (868) CN 6–8 ht. 37 13/32″ (950) CN 8–0 ht. 50 15/16″ (1294) NOTE: For special heights give dimension A.		10830034 10830003 10830080

OBSOLETE PARTS

ILLUSTRATION *NOT TO SCALE*	DESCRIPTION	LENGTH-COLOR	PART NO.
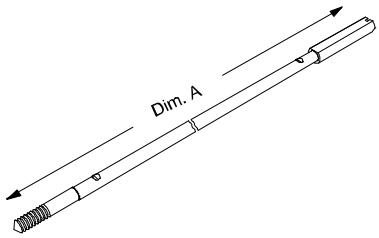	**Locking Rod** CN 6–5 ht. 34 5/32″ (868) CN 6–8 ht. 37 13/32″ (950) CN 8–0 ht. 53 13/32″ (1357) NOTE: For special heights give dimension A.		10830034 10830003 10830013
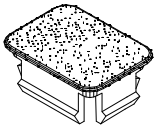	**Leveling Block Cap**	BG	11868010
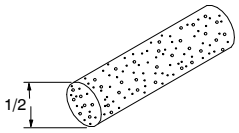	**Foam Backer Rod** Specify Length Clad Only	GY	10500204
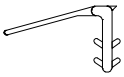	**Sill Weather Strip** V791 Color: Beige	99 5/16″	15641160

OBSOLETE PARTS

ILLUSTRATION *NOT TO SCALE*	DESCRIPTION	COLOR	PART NO.
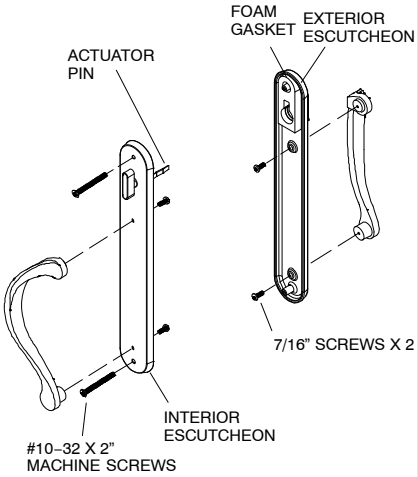	**Handle, Non–Keyed**	Polished Chrome	10830063
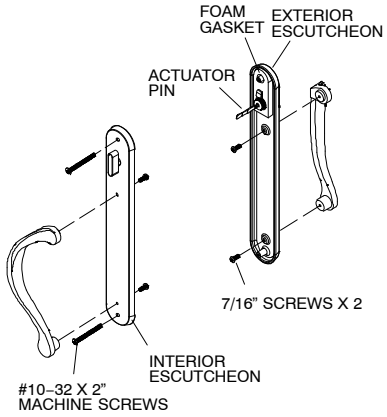	**Handle, Keyed**	Polished Chrome	10830068
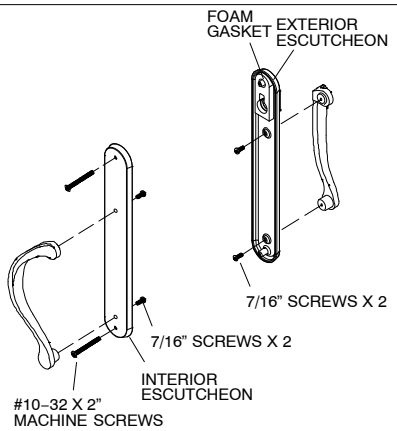	**Inactive Handle**	Polished Chrome	10830075
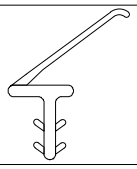	**Head Jamb, Parting Stop, Astragal** V795 79 5/16″ 79 5/16″	 BG BK	 15646068 15646069

OBSOLETE REPLACEMENT WOOD PARTS

OBSOLETE REPLACEMENT WOOD PARTS

	Clad	Wood
Head Jamb Filler	W7516	W7516
Stationary Panel Top Filler	– – –	W7506
Leveling Block Filler	W7508	W7508
Head Jamb Liner	W7274	W7274
Sill Liner	W7532	– – –
Panel Top Track	W7583	W7583
Panel Guide	W7502	W7502
Astragal for OXXO	W7570	W7509
Bottom Rail Block (Stationary)	W7510	W7510
NOTE: Replacement wood parts are supplied with connecting barb (where applicable).		

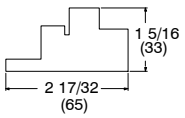

W7516 – Head Jamb Filler

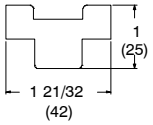

W7506 – Stationary Panel Top Filler – Wood

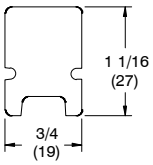

W7508 – Leveling Block Filler

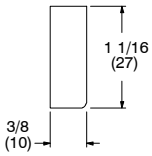

W7274 – Head Jamb Liner

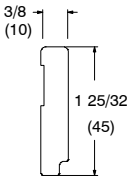

W7532 – Sill Liner (oak)

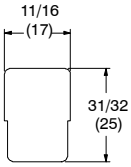

W7583 – Panel Top Track

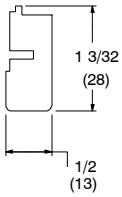

W7502 – Panel Guide

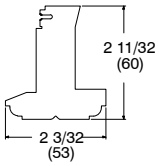

W7570 – Astragal for OXXO – Clad

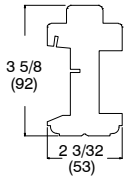

W7509 – Astragal for OXXO – Wood

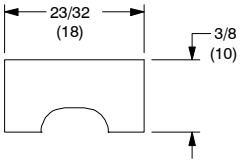

W7510 – Bottom Rail Block (Stationary)

TO ORDER OBSOLETE REPLACEMENT WOOD PARTS

When ordering replacement wood parts specify:

1. profile number;
2. rough opening;
3. handing;
4. length;
5. finish.

OBSOLETE REPLACEMENT WOOD PARTS

OBSOLETE REPLACEMENT WOOD PARTS

OBSOLETE		
	Clad	**Wood**
Stationary Panel Top Filler	W7572	– – –
Stationary Jamb Filler	W7576	W7501
Jamb Liner	W7505	W7505
Center Jamb Liner	W7514	W7514
Stationary Panel Cover	W7504	W7504
Head Jamb and Jamb Parting Stop	– – –	W7500
Interior Cover	W7515	W7515
Panel Top Track	– – –	W7503
Panel Top Track	W7573	W7573
NOTE: Replacement wood parts are supplied with connecting barb (where applicable).		

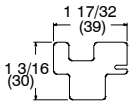

W7572 – Stationary Panel Top Filler – Clad

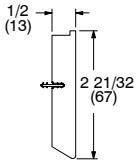

W7576 – Stationary Jamb Filler – Clad

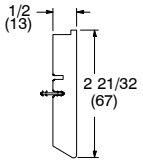

W7501 – Stationary Jamb Filler – Wood

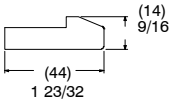

W7505 – Jamb Liner

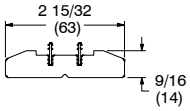

W7514 – Center Jamb Liner

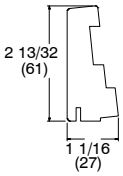

W7500 – Head Jamb and Jamb Parting Stop – Wood

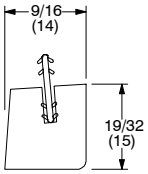

W7515 Interior Cover

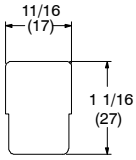

W7503 – Panel Top Track – Wood

TO ORDER REPLACEMENT WOOD PARTS

When ordering replacement wood parts specify:

1. profile number;
2. call number or rough opening;
3. handing;
4. length;
5. finish.

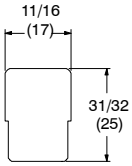

W7573 – Panel Top Track

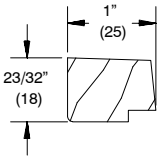

W7504 – Stationary Panel Head Jamb Cover

OBSOLETE REPLACEMENT PARTS

ORDERING REPLACEMENT VINYL, ALUMINUM OR FIBERGLASS PARTS FOR THE SLIDING FRENCH DOOR

	Clad	Wood
Roller Track – Beige	V786	– – –
Leveling Block – Beige	V792	V792
Stationary Panel Fastener and Panel Guide Fastener *NOTE: Color may vary depending on current stock.*	V793	V793
Panel Drip – Beige	V800	V800
Roller Track Cover – Beige	V830	– – –
Sill Track (for interior oak sill)	– – –	A640
Ultrex Sill – Beige	F254	F254
Stationary Panel Clad Filler	– – –	A703
Screen Track	– – –	A641
Sill Cover and Ultrex Sill Core Assembly – Beige	V790/F250	V790/F250

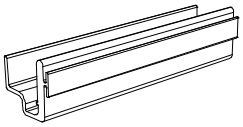

V786 – Roller Track

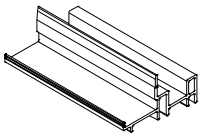

V792 – Leveling Block

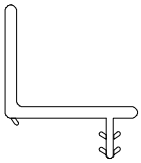

V793 – Stationary Panel Fastener and Panel Guide Fastener

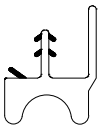

V800 – Panel Drip

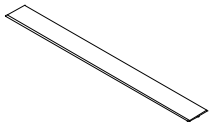

V830 – Roller Track Cover

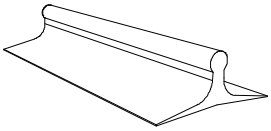

A640 – Sill Track (For interior oak sill)

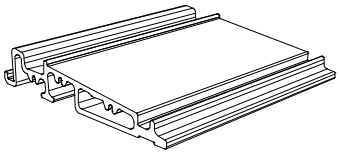

F254 – Ultrex Sill

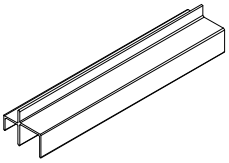

A703 – Stationary Panel Clad Filler

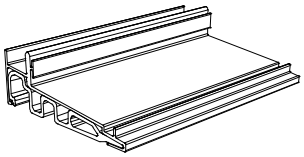

V790/F250 – Sill cover and Ultrex Sill Core Assembly

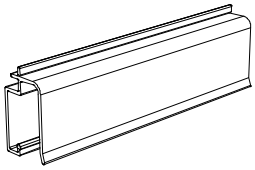

A641 – Screen Track Replaced by A777

TO ORDER REPLACEMENT PARTS

When ordering replacement parts specify:

1. profile number;
2. rough opening;
3. length;
4. handing;
5. finish.

OBSOLETE PANEL REPLACEMENT

ORDERING OBSOLETE REPLACEMENT PANELS FOR THE SLIDING FRENCH DOOR

To order replacement panels specify:

1. OM of panel;
   NOTE: OM of panel does not include astragal.
2. active, inactive or stationary (specify astragal if applicable);
3. handing;
4. glazing;
5. finish;
6. Pre 2002;

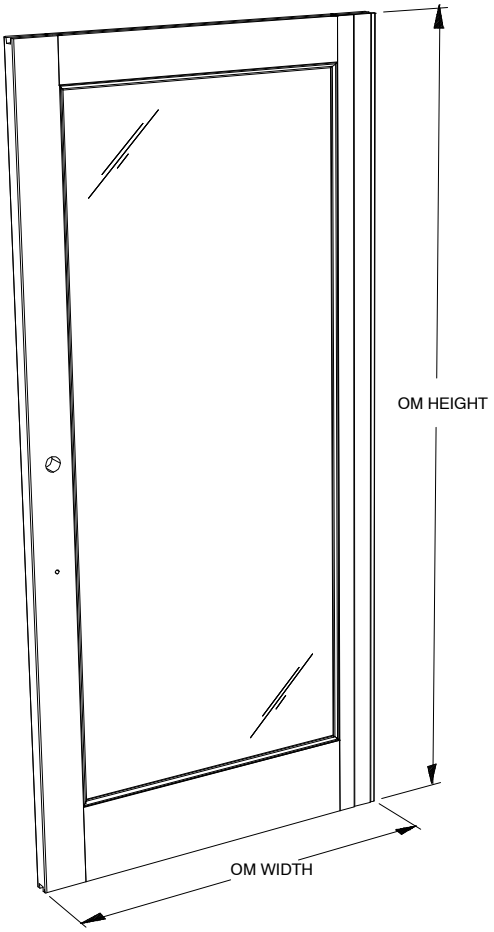

Wood Active Panel
Exterior View

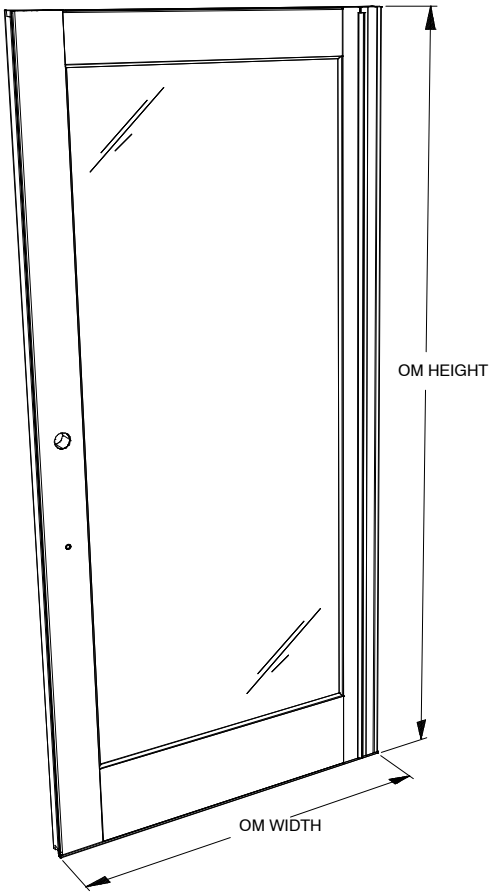

Clad Active Panel
Exterior View

NOTE: Active panels include sash rollers, meeting stile Weather Strip, panel drip and interlock.

Inactive panels include sash rollers, meeting stile Weather Strip, panel drip, interlock and astragal with mushroom bolts and Weather Strip.
Recommended order with hardware installed, if not astragal separate.
Stationary panels include panel fastener, clad panels also include a stationary top filler.

OBSOLETE – SCREENS & SCREEN PARTS

MARVIN Windows and Doors
Built around you.

ORDERING REPLACEMENT SCREENS FOR SLIDING FRENCH DOOR

Top hung screens are available with aluminum surround and charcoal colored fiberglass 18 x 16 screen mesh. Aluminum mesh is available as an option in black, charcoal, bright aluminum or bright bronze. Determine the outside measurement of the existing screen. Find the sizes that correspond to the width and height indicated on the following chart. Surrounds are available in bronze, white, brown and pebble gray.

When ordering replacement screen specify:

1. size; – If there is no existing screen from which to obtain the OM of the screen, determine the size of the screen by using measurement conversion chart below. The daylight opening is the measurement of the visible glass.
2. color;
3. mesh type (if other than standard);
4. handing.

Sliding French Door
Manufactured April 1993 – March 2002

Daylight Opening to OM of Screen

Wood

Daylight Width + 8 1/16″ = OM Width of Screen
Daylight Height + 12 13/16″ = OM Height of Screen

Clad

Daylight Width + 8 1/16″ = OM Width of Screen
Daylight Height + 12 15/16″ = OM Height of Screen

Standard Screen Width			Standard Screen Height	
SIZE		**OM–WIDTH**	**SIZE**	**OM–HEIGHT**
CN 5-0	(6-5 ht)	28 5/16″	CN 6–5	75 13/16″
CN 6-0	(6-5 ht)	34 5/16″		
CN 8-0	(6-5 ht)	46 5/16″		
CN 5-0	(6-8, 8-0 ht)	29 13/16″	CN 6–8	79 1/16″
CN 6-0	(6-8, 8-0 ht)	35 13/16″	CN 8-0	95 1/16″
CN 8-0	(6-8, 8-0 ht)	47 13/16″		

NOTE: On April 1, 1993 rollers, guide bars and screen width was reduced 3/8″. Replacement Screens (for units manufactured prior to April 1993) will be sent with a new roller bar for compatibility.

OBSOLETE – SCREENS & SCREEN PARTS

SLIDING FRENCH DOOR SCREEN PARTS

The following parts are used on Sliding French Door screens. When ordering replacement parts specify:

1. part number;
2. quantity.

ILLUSTRATION *NOT TO SCALE*	DESCRIPTION	OPER./COLOR	PART NO.
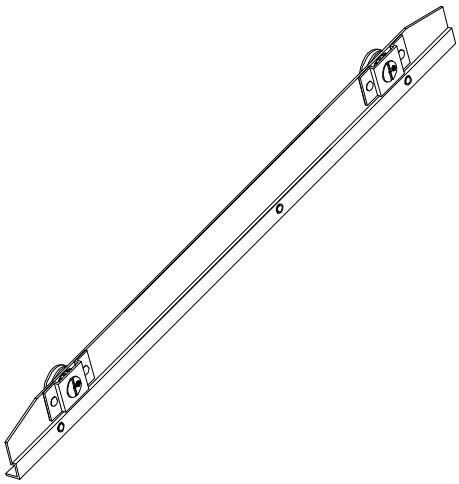	**Top Hung Screen Roller Assembly** CN 5065 28 5/16″ CN 6065 34 5/16″ CN 8065 46 5/16″	SW	11375950 11375960 11375980
	CN 5065 28 5/16″ CN 6065 34 5/16″ CN 8065 46 5/16″	BZ	11370650 11370660 11370680
	CN 5065 28 5/16″ CN 6065 34 5/16″ CN 8065 46 5/16″	PB	11370450 11370460 11370480
	CN 5065 28 5/16″ CN 6065 34 5/16″ CN 8065 46 5/16″	BN	11370250 11370260 11370280
	CN 5065 28 5/16″ CN 6065 34 5/16″ CN 8065 46 5/16″	EG	11369850 11369860 11369880

DISCONTINUED PARTS

ILLUSTRATION *NOT TO SCALE*	DESCRIPTION	OPER./COLOR	PART NO.
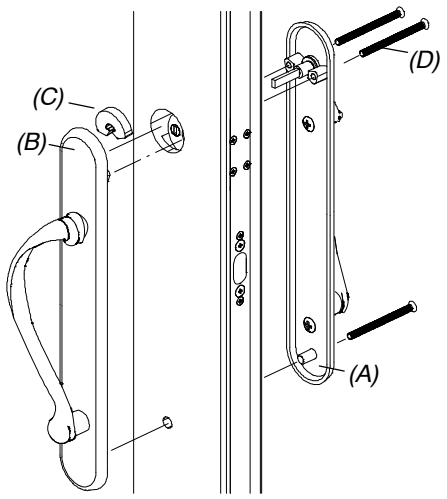	**Handle, Solid Brass, Non-Keyed**	**Left Hand** Brass Antique Brass Polished Chrome Brushed Chrome White PVD **Right Hand** Brass Antique Brass Polished Chrome Brushed Chrome White PVD	NA Use current wide style handle. Refer to Service Manual for retrofit instructions.
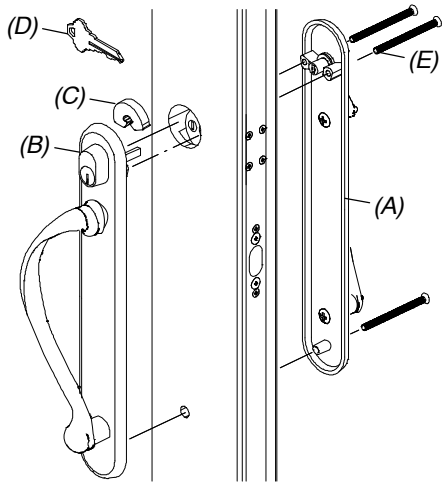	**Handle, Solid Brass, Keyed** (Schlage “C” Keyway)	**Left Hand** Brass Antique Brass Polished Chrome Brushed Chrome White PVD **Right Hand** Brass Antique Brass Polished Chrome Brushed Chrome White PVD	NA Use current wide style handle. Refer to Service Manual for retrofit instructions
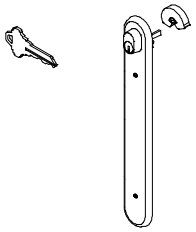	**Escutcheon Plate, Keyed** (Schlage “C” Keyway) Non-Handed	Brass	NA
	Stop clip with screws		(00142016) NA

DISCONTINUED PARTS

ILLUSTRATION *NOT TO SCALE*	DESCRIPTION	OPER./COLOR	PART NO.
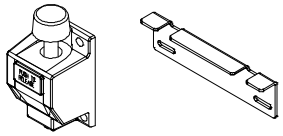	**Auxiliary Foot Bolt, Package**	BG	(10150035) N/A Replaced by Auxiliary Foot bolt Kit
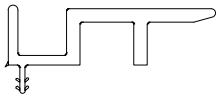	**Interlock, Stationary and Operating Panel** V1828		N/A Replaced by V1828
	#10–32x2″ Phillips ovalhead machine screw	Polished Chrome	NA
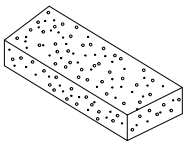	**Foam, Leveling Block Gasket** 5/16″ x 3/4″ x 2″	BK	NA
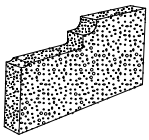	**Foam Gasket, Roller Track at Center Jamb**	BK	NA
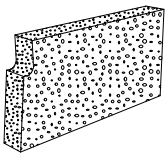	**Foam Gasket, Roller Track at Locking Jamb**	BK	NA
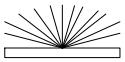	**Pile Block, Screen Roller Bar** 1/2″ x 3/8″ x 5/8″ Adhesive backed	GY	NA
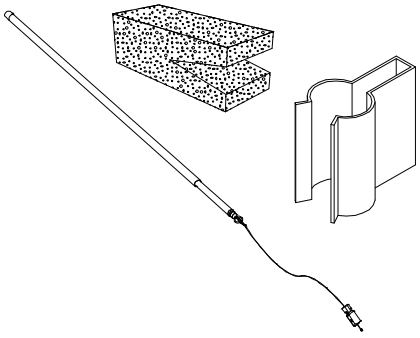	**Automatic Screen Door Closer Assembly**	WH	NA