CHAPTER 10

TILT-TURN, HOPPER, INSWING CASEMENT AND ROUND TOP TILT-TURN

Table of Contents

	PAGE
History	10.2
Part Identification – Wood Tilt-Turn & Inswing Casement – 4 9/16″ Jambs	10.3
Part Identification – Wood Tilt-Turn & Inswing Casement Basic Unit	10.4
Part Identification – Wood Tilt-Turn Direct Glaze – 4 9/16″ Jambs	10.5
Part Identification – Clad Tilt-Turn & Inswing Casement – 4 9/16″ Jambs	10.6
Part Identification – Clad Tilt-Turn & Inswing Casement Basic Unit	10.7
Part Identification – Wood Round Top Tilt-Turn & Inswing Casement – 4 9/16″ Jambs	10.8
Parts – Tilt-Turn	10.9
Parts – Hopper	10.15
Parts – Inswing Casement	10.18
Parts – Miscellaneous Tilt-Turn, Hopper, Inswing Casement & Round Top Tilt-Turn	10.23
Replacement Wood Parts – Tilt-Turn	10.25
Sash Replacement/Weatherstrip	10.26
Screens and Screen Parts	10.27
Interior Energy Panels and Parts	10.29
Obsolete Parts – Tilt-Turn	10.30
Obsolete Parts – Hopper	10.36
Obsolete Parts – Inswing Casement	10.39
Obsolete Parts – Round Top Tilt-Turn	10.44
Obsolete Miscellaneous Parts	10.48
Obsolete Sash Replacement	10.52

ATTENTION:

- Specification and technical data are subject to change without notice.
- Numbers listed in parentheses ( ) are metric equivalents in millimeters rounded to the nearest whole number.

HISTORY

PRODUCED	UNIT TYPE	FEATURES OR CHANGES	DISCONTINUED
1984	Wood and Clad Tilt-Turn, Hopper, Inswing Casement and Round Top Tilt-Turn	Tilt-Turn, Hopper and Inswing Casement introduced. Basic units feature 2 13/32″ jambs. Stationary units available as in-sash or keyed units. TIlt-Turns feature unique two mode operation controlled by one handle. Hopper units have one mode of operation, tilting at the top for ventilation. Inswing Casements turn in and do not tilt. These units have no standard sizes.	Present
1985	Wood Tilt-Turn and Round Top Tilt-Turn	Direct glaze stationary units (without hardware) introduced.	Present
1986	Wood and Clad Tilt-Turn, Hopper, Inswing Casement and Round Top Tilt-Turn	New jamb extension profiles and attachment location for wood units in early 1986, clad units mid 1986. Because of new profiles and attachment location frame sizes changed in width and height.	Present
1988	Wood and Clad Tilt-Turn, Inswing Casement and Round Top Tilt-Turn	Handing policy changed from European standard (viewed from the interior) to being viewed from the exterior (Marvin standard). Right or left hand identification on hinges should be disregarded.	Present
1988	Wood and Clad Tilt-Turn, Hopper and Inswing Casement	Jamb extension for multiple assemblies now applied to the perimeter head jamb, side jambs and sill as well as continuous extensions applied to selected intermediate mulls.	Present
1992	Wood Tilt-Turn, Hopper, Inswing Casement and Round Top Tilt-Turn	Simulated divided lite option introduced.	Present
1993	Clad Tilt-Turn, Hopper and Inswing Casement	Introduced factory installed clad brick mould casing and simulated divided lite option.	Present
1994	Wood and Clad Tilt-Turn, Hopper and Inswing Casement	Interior energy panel surround changed from vinyl to metal.	Present
1997	Wood and Clad Tilt-Turn, Round Top Tilt–Turn, and Inswing Casement	Top Hinge change.	2000
2000	Wood and Clad Tilt-Turn, Round Top Tilt–Turn and Inswing Casement	1/26/00 Round Top Tilt–Turn & Tilt–Turn Top and Bottom Hinge change. 1/26/00 Inswing Casement snubber at center changed to a pinned hinge. Top and Bottom Hinge change.	Present
2000	Wood and Clad Hopper	9/00 Frame and sash snubber changed.	Present
2002	Clad Tilt-Turn, Hopper and Inswing Casement	3/02 Stone White becomes a standard color. Arctic White transitions to a select color.	Present
2006	Tilt-Turn, Inswing, Hopper	5/22/06 Roto Centro 101 (YZD) hardware was discontinued and replaced with the Roto NT (metal gray) hardware system.	Present
2009	Tilt-Turn, Inswing	6/22/09 New part numbers for bottom corner hinge, pivot rest, and caps. Design change by supplier.	Present
2010	MTT, MICA, MHOP, MSTA, MSTA KEY	2/03/2010 Added a .313 by .031 thick bumper to the glazing bed of the Magnum Tilt–Turn units (wood and clad).	Present
2011	All	04/25/2011 Added LoĒ-180™ as a standard option for all products. White painted interior finish option introduced for all products.	Present
2012	Wood and Clad Tilt–Turn All All	02/27/2012 Upgraded screen which will now offer Hi Transparency screen mesh as the standard. 10/29/2012 Interior Square Sticking/Glazing Bead option introduced. 12–17–2012 Introduced Clear interior finish option on all products.	Present

PART IDENTIFICATION

WOOD TILT-TURN & INSWING CASEMENT 4 9/16″ JAMBS

HEAD JAMB & SILL DETAIL

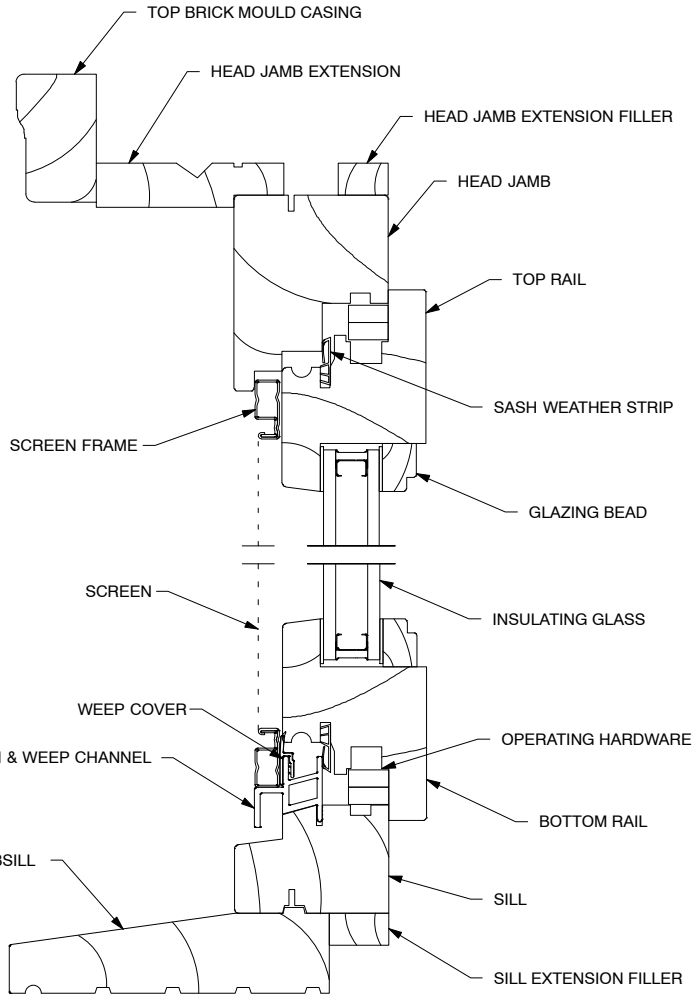

JAMB DETAIL

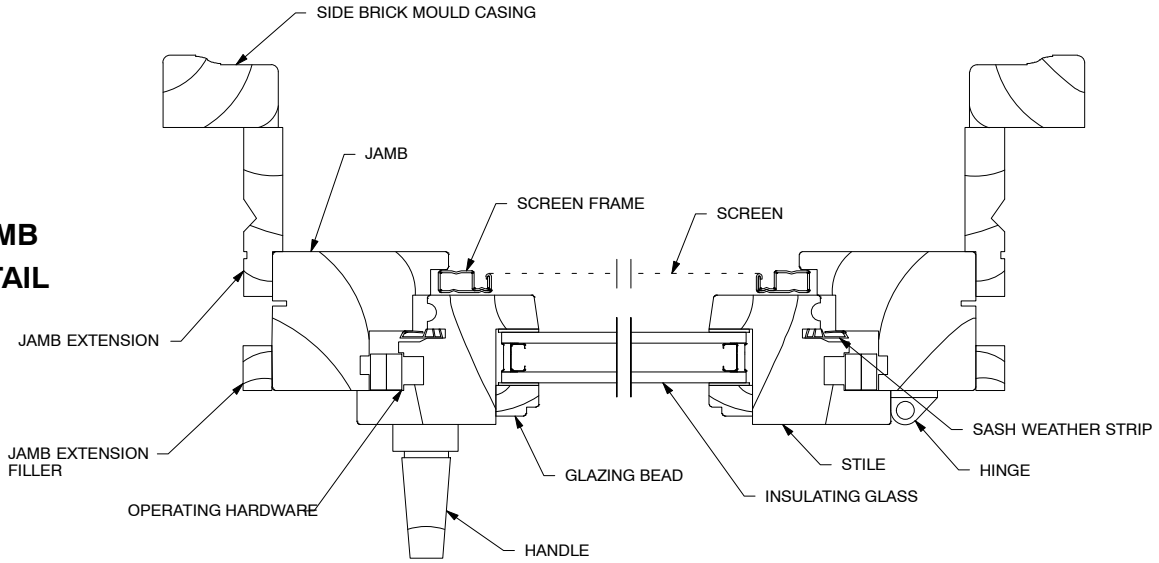

NOTE: Not to scale; specifications subject to change without notice. Hopper part identification is the same as above with the exception of handle location.

PART IDENTIFICATION

WOOD TILT-TURN & INSWING CASEMENT BASIC UNIT

HEAD JAMB & SILL DETAIL

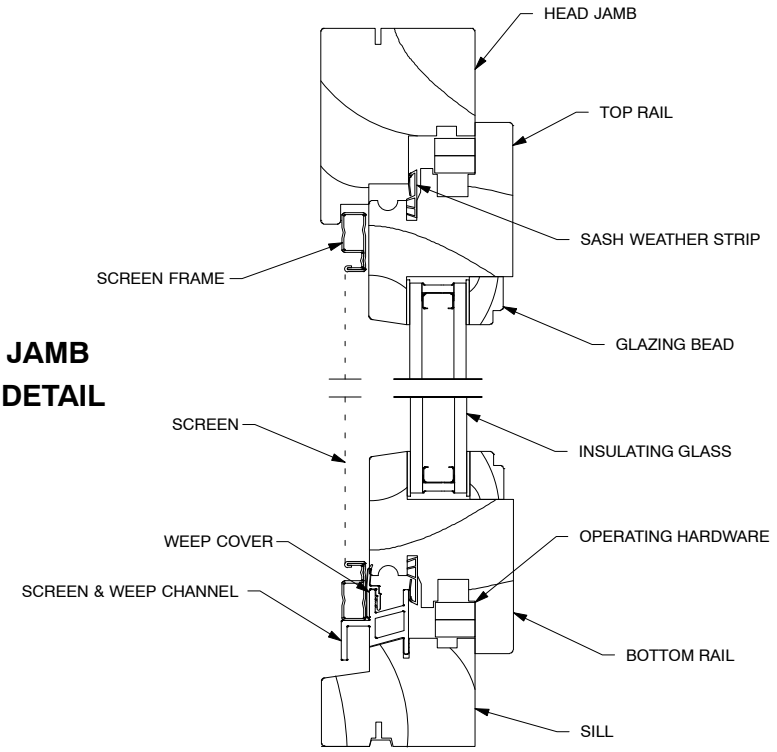

JAMB DETAIL

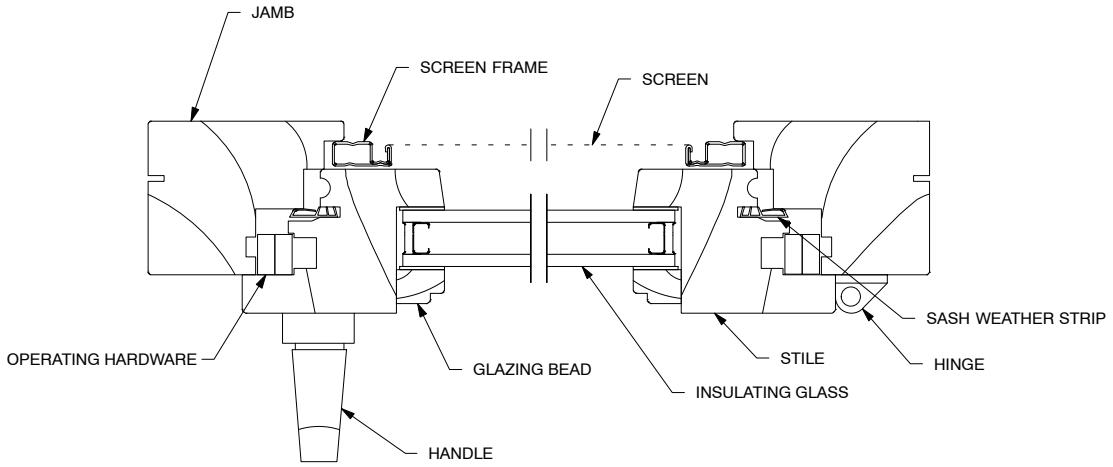

NOTE: Not to scale; specifications subject to change without notice. Hopper part identification is the same as above with the exception of handle location.

PART IDENTIFICATION

WOOD TILT-TURN DIRECT GLAZE 4 9/16″ JAMBS

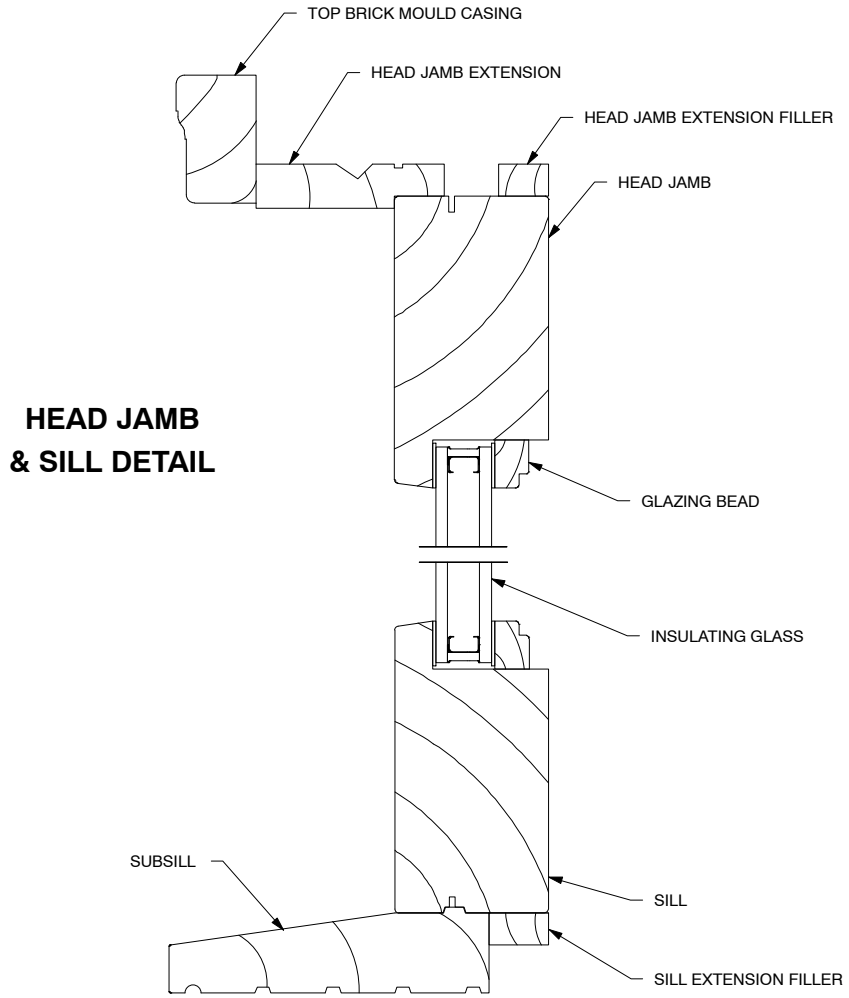

HEAD JAMB & SILL DETAIL

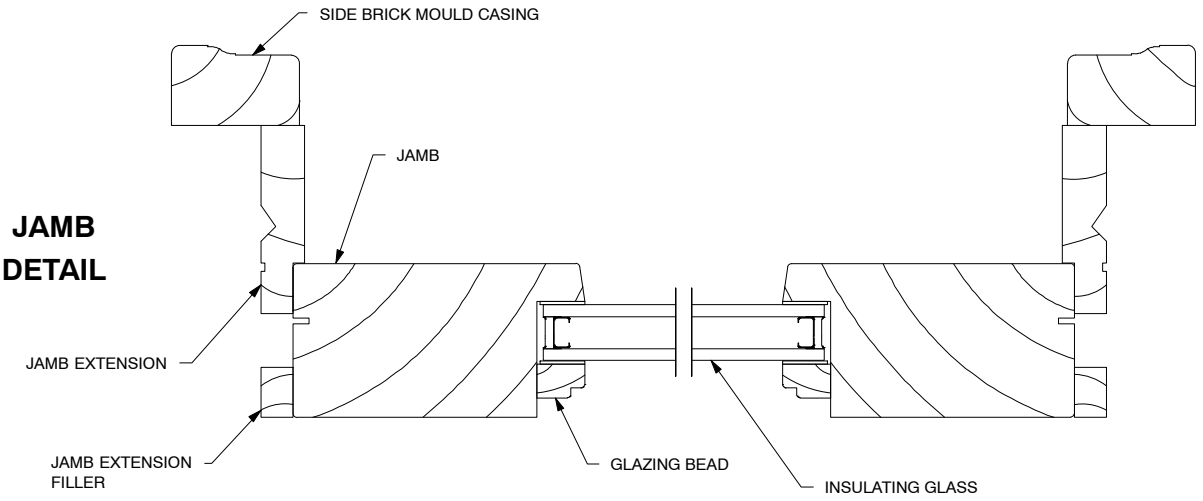

JAMB DETAIL

NOTE: Not to scale; specifications subject to change without notice.

PART IDENTIFICATION

CLAD TILT-TURN AND INSWING CASEMENT 4 9/16″ JAMBS

HEAD JAMB & SILL DETAIL

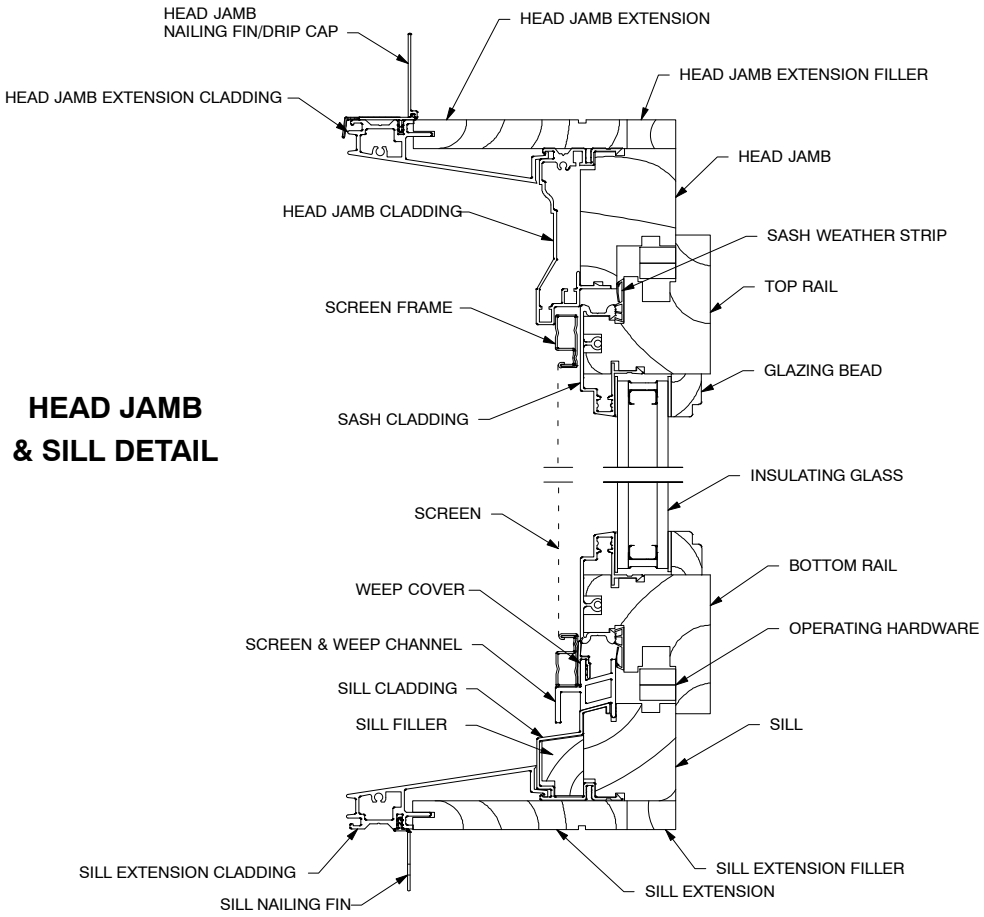

JAMB DETAIL

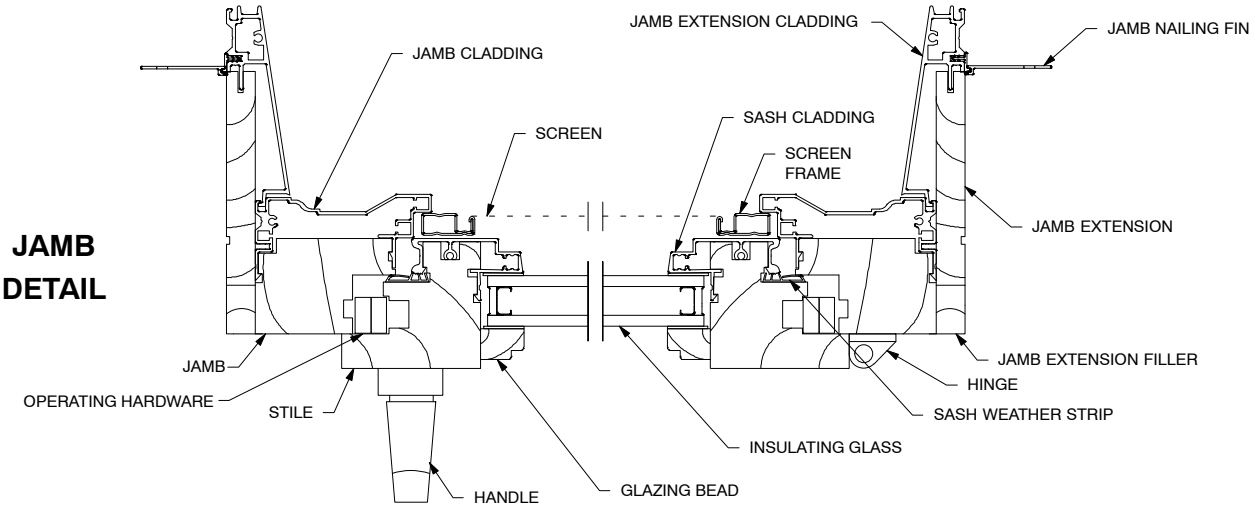

NOTE: Not to scale; specifications subject to change without notice. Hopper part identification is the same as above with the exception of handle location.

PART IDENTIFICATION

CLAD TILT-TURN & INSWING CASEMENT BASIC UNIT

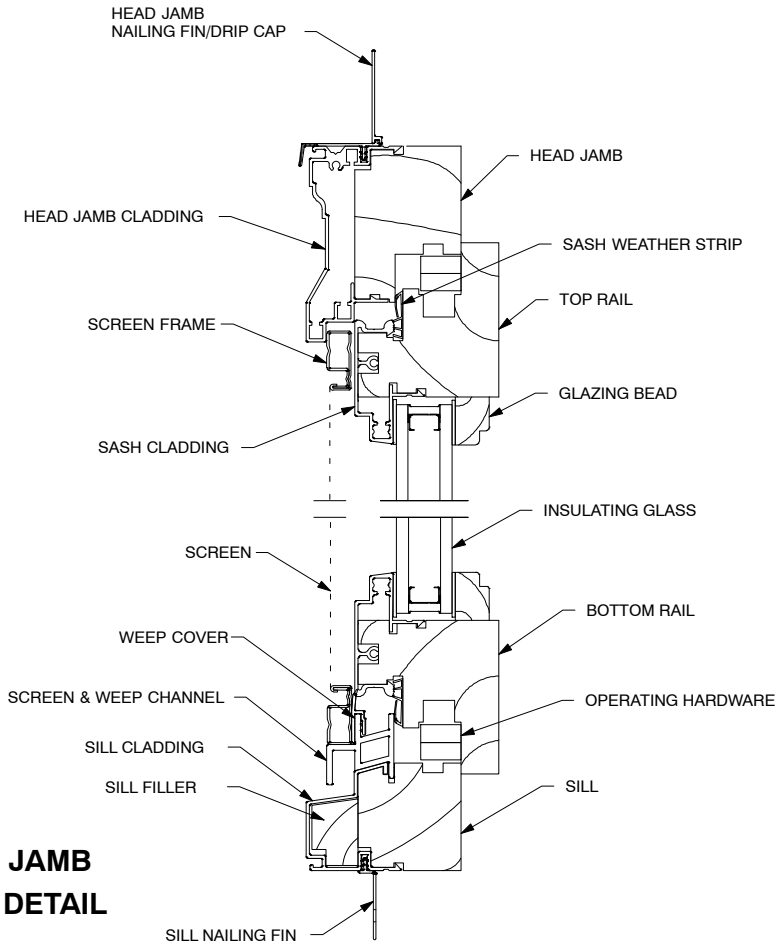

HEAD JAMB & SILL DETAIL

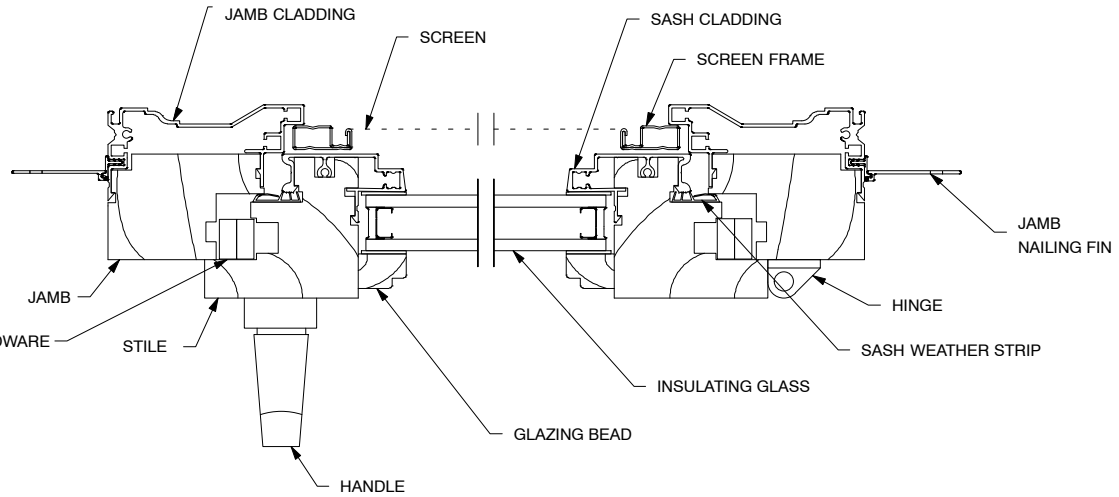

JAMB DETAIL

NOTE: Not to scale; specifications subject to change without notice. Hopper part identification is the same as above with the exception of handle location.

PART IDENTIFICATION

WOOD ROUND TOP TILT-TURN AND INSWING CASEMENT 4 9/16″ JAMBS

HEAD JAMB & SILL DETAIL

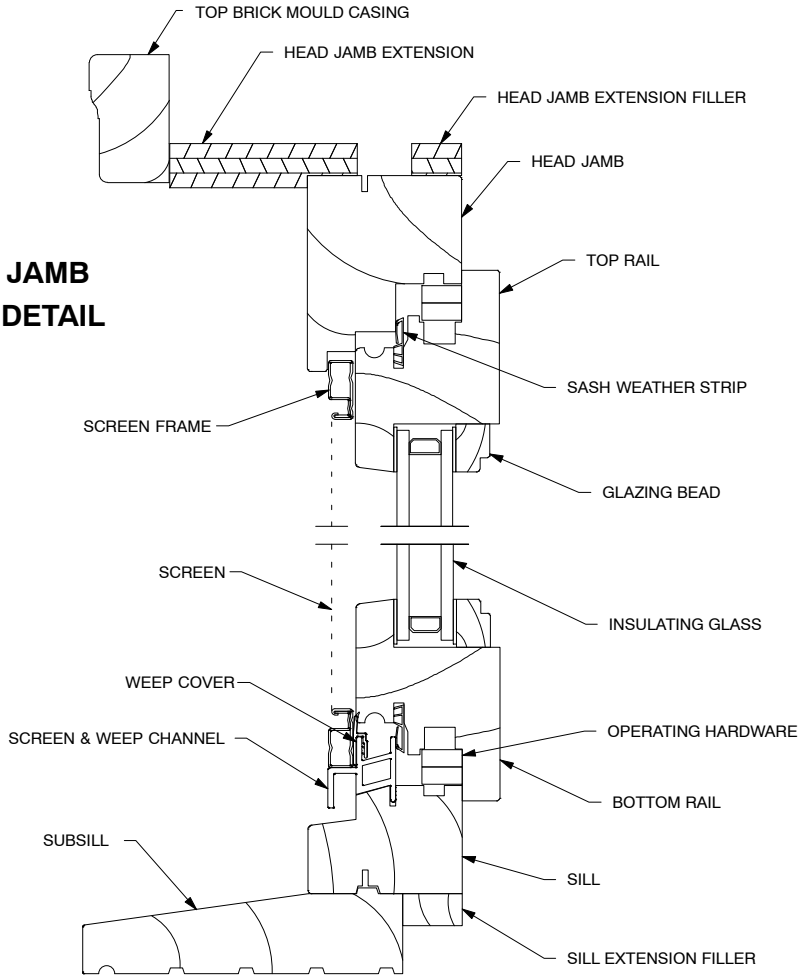

JAMB DETAIL

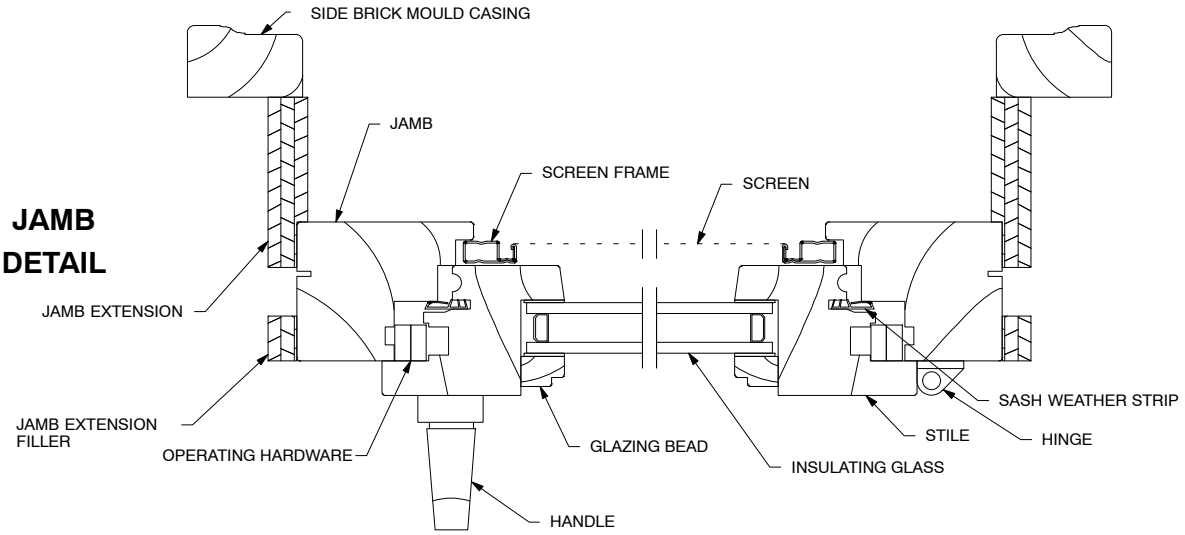

NOTE: Not to scale; specifications subject to change without notice.

When ordering replacement Tilt-Turn parts specify:

1. type of unit;
2. part number;
3. description.

NOTE: *Always determine handing of parts from the exterior (hinged side). Since the vendor determines handing from the interior, some parts may be stamped with an "L" or "R."* ***For Marvin handing identification****, an "L" will mean right hand and an "R" will mean left hand. DO NOT SPECIFY USING VENDOR METHOD.*

ILLUSTRATION *NOT TO SCALE*	DESCRIPTION	OPER./ COLOR	PART NO.
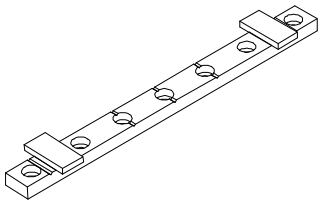	**Groove Packer / Spacer** K606A81		10815171
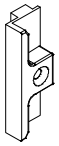	**Striker** *Includes:* *1 – Striker* *1 – #8x1 1/2" Phillips flat head screws (11808110)*		10811701
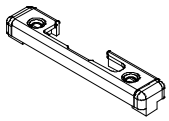 *LH Shown*	**Striker, Steel Security** *Includes:* *1 – Steel Security Striker* *2 – #8x1 1/2" Phillips flat head screws (11808110)*	LH RH	10811767 10811768
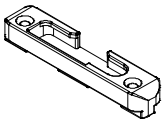 *LH Shown*	**Striker, Tilt–Turn** *Includes:* *1 – Tilt–Turn Striker* *2 – #8x1 1/2" Phillips flat head screws (11808110)*	LH RH	10811746 10811747
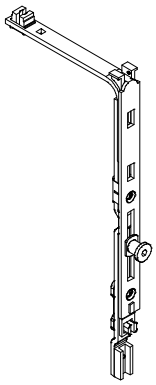	**Corner Drive, Stay** *Includes:* *1 – Corner Drive, Stay* *2 – #6x1 1/2" Phillips flat head screws (11800103)*		10811714
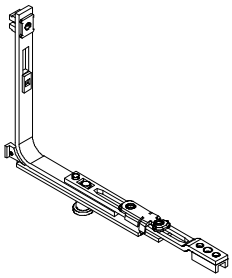	**Corner Drive, Tilt–Turn** *Includes:* *1 – Corner Drive Tilt–Turn* *1 – #6x1 1/2" Phillips flat head screws (11800103)*		10811713

ILLUSTRATION *NOT TO SCALE*	DESCRIPTION	OPER./ COLOR	PART NO.
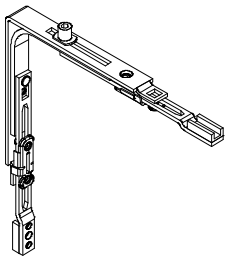	**Corner Drive, E–Cam** *Includes:* *1 – Corner Drive, E–Cam* *2 – #6x1 1/2″ Phillips flat head screws (11800103)*		10811700
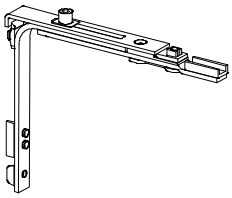	**Corner Drive, Special** *Includes:* *1 – Corner Drive, Special* *2 – #6x1 1/2″ Phillips flat head screws (11800103)*		10811759
	Mishandling Device, Frame *Includes:* *1 – Mishandling Device, Frame* *2 – #8x1 1/2″ Phillips flat head screws (11808110)*		10811744
	Mishandling Device, Sash *Includes:* *1 – Mishandling Device Sash* *1 – #6x1 1/2″ Phillips flat head screws (11808103)*		10811745
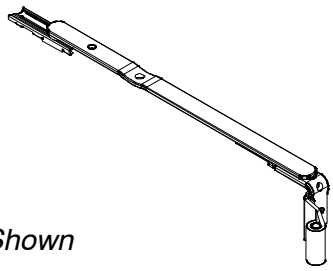 *LH Shown*	**Arm, Sash Stay** *Includes:* *1 – Sash Stay Arm*		
	290–410, 150mm	LH	10811715
	290–410, 150mm	RH	10811716
	411–600, 250mm	LH	10811717
	411–600, 250mm	RH	10811718
	601–800, 350mm	LH	10811719
	601–800, 350mm	RH	10811720
	801–1400, 500mm	LH	10811721
	801–1400, 500mm	RH	10811722

ILLUSTRATION *NOT TO SCALE*	DESCRIPTION	OPER./ COLOR	PART NO.
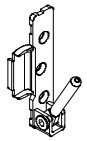 *LH Shown*	**Pivot Rest** LH or RH Corner *Includes:* *1 – Pivot Rest* *3 – #8x1 1/2″ Phillips flat head screws (11808110)*	LH RH	10811752 10811753
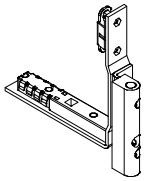 *LH Shown*	**Hinge** LH or RH Corner *Includes:* *1 – Hinge* *6 – #6x1 1/2″ Phillips flat head screws (11800103)*	LH RH	10811754 10811755
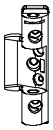	**Bearing, Sash Stay** *Includes:* *1 – Bearing* *3 – #8x1 1/2″ Phillips flat head screws (11808110)*		10811742
	Pin, Sash Stay Bearing *Includes:* *1 – Sash Stay Bearing Pin*		10811743
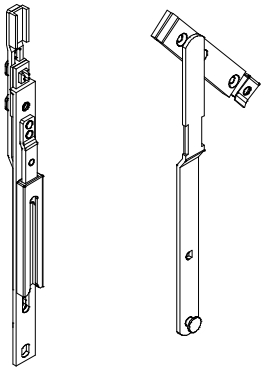	**Additional Scissor Stay*** (sash and frame) *Includes:* *1 – Additional Scissor Stay (2 piece)* *2 – #6x1 1/2″ Phillips flat head screws (11800103)* *2 – #8x1 1/2″ Phillips flat head screws (11808110)* * Unit must have 36″ minimum width		10811769
(a) (b) 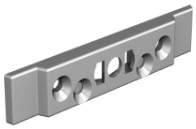 (c) (d) (e)	**Turn Restrictor Field Applied Kit** *Includes:* *1 – Turn Restrictor 335mm (10811774) (a)* *1 – Bearing (10811775) (b)* *1 – Groove Packer (10815171) (c)* *4 – #6 x 1 1/2” Phillips flat head screws (11800103) (d)* *2 – #8 x 1 1/2” Phillips flat head screws (11808110) (e)* *1 – Instruction* NOTE: This kit is for products with a minimum sash OSM width of 25 1/2” (648mm) AND built after 5/22/2006.		11852602

ILLUSTRATION *NOT TO SCALE*	DESCRIPTION	LENGTH	PART NO.
	Espagnolette *Includes:* *1 – Espagnolette*	**Sash O.M. Height** 12 7/16″–20 5/16″ 20 3/8″–25 1/16″ 25 1/8″–32 15/16″ 33″–40 13/16″ 40 7/8″–48 11/16″ 48 3/4″–56 9/16″ 56 5/8″–64 7/16″ 64 1/2″–72 5/16″ 72 3/8″–80 3/16″ 80 1/4″–88 1/16″ 88 1/8″–95 15/16″	 10811723 10811724 10811725 10811726 10811727 10811728 10811729 10811730 10811731 10811732 10811733
	Espagnolette, Centered Handle *Includes:* *1 – Espagnolette*	**Sash O.M. Height** 13 5/8″–19 1/8″ 19 1/4″–25 7/8″ 25 7/8″–32 15/16″ 33″–48 11/16″ 48 3/4″–64 7/16″ 64 1/2″–80 3/16″ 80 1/4″–95 15/16″	 10811702 10811703 10811704 10811705 10811706 10811707 10811708
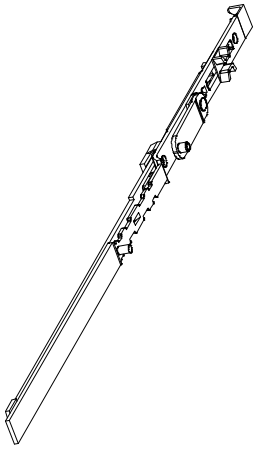	**Guide, Sash Stay** *Includes:* *1 – Sash Stay Guide*	**Sash O.M. Width** 12 7/8″–17 9/16″ 17 5/8″–25 1/16″ 25 1/8″–32 15/16″ 33″–40 13/16″ 40 7/8″–48 11/16″ 48 3/4″–56 9/16″	 10811734 10811735 10811736 10811737 10811738 10811739

ILLUSTRATION *NOT TO SCALE*	DESCRIPTION	LENGTH/COLOR	PART NO.
	Espagnolette Extension *Includes:* *1 – Extension*	200mm 200mm w/Cam 400mm w/Cam 270mm (croppable)	10811771 10811772 10811773 10811770
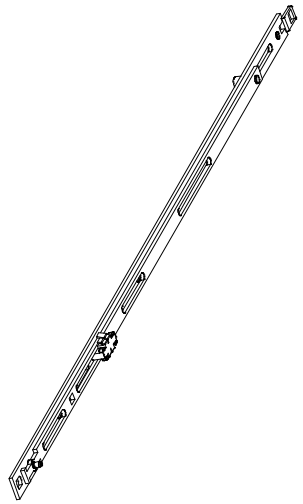	**Center Lock** *Includes:* *1 – Center Lock*	600mm 600mm w/connector	10811750 10811751
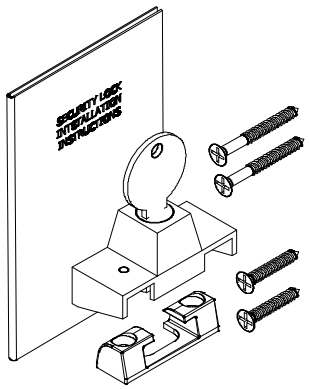	**Security Lock Kit** *Includes:* *1 – Security Lock/Keeper/Key (10811781 Metal gray, 1081782 White)* *2 – #8x1″ SS flat head screws (11800805))* *2 – #8x1 1/2″ Phillips flat head screws (11808110)* *1 – Installation instruction*	Metal Gray White	11852600 11852601

WOOD MAGNUM TILT–TURN
Frame and Sash Hardware Locations

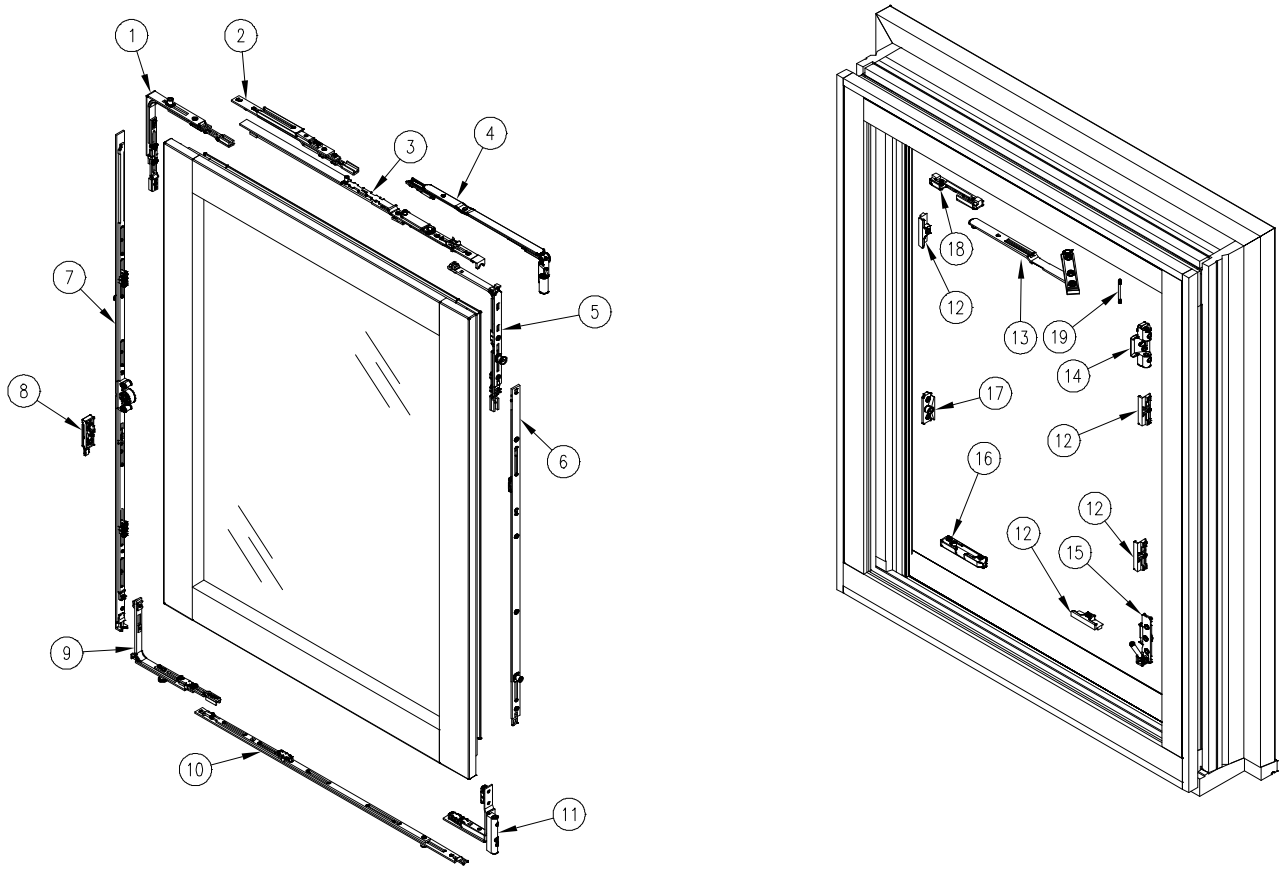

NOTE: Not to scale; specifications subject to change without notice.

1. Corner Drive E–Cam
2. Additional Scissor Stay–Sash
3. Sash Stay Guide
4. Sash Stay Arm
5. Corner Drive Stay
6. Center Lock, 600mm
7. Espagnolette
8. Mishandling Device Sash
9. Corner Drive Tilt–Turn
10. Center Lock, 600mm
11. Corner Hinge
12. Striker
13. Additional Scissor Stay–Frame
14. Sash Stay Bearing
15. Pivot Rest
16. Striker, Tilt–Turn
17. Mishandling Device Frame
18. Steel Security Striker
19. Pin, Sash Stay Bearing

When ordering replacement Hopper parts specify:

1. type of unit;
2. part number;
3. description.

ILLUSTRATION *NOT TO SCALE*	DESCRIPTION	LENGTH	PART NO.
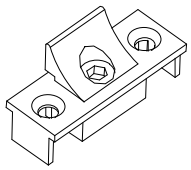	**Snubber (Sash)** 872833 *Includes:* *1 – Sash snubber* *2 – #6x1 1/2″ Phillips flathead wood screws (11808103)*		10815147
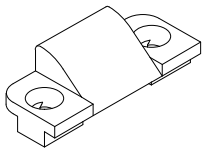	**Snubber (Frame)** 873267 *Includes:* *1 – Frame snubber* *2 – #8x1 1/2″ Phillips flathead wood screws (11808110)*		10815148
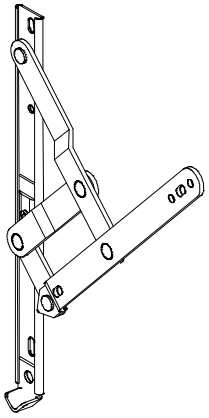	**Hinge** *Includes:* *1 – Hinge*		
	Hinge Height	**Sash O.M. Height**	
	10″ (254)	13 3/16″–19 3/16″	10814430
	12″ (305)	19 1/4″–25 3/16″	10814490
	16″ (406)	25 1/4″–32 15/16″	10814450
	16″ (406)	33″–37 3/16″	10814450
	20″ (508)	37 4/16″–41 15/16″	10814460
	20″ (508)	42″–48 3/16″	10814460
	20″ (508)	48 1/4″–52 3/16″	10814460
	24″ (610)	52 1/4″–55 3/16″	10814470
	28″ (711)	55 1/4″–59 3/16″	10814480
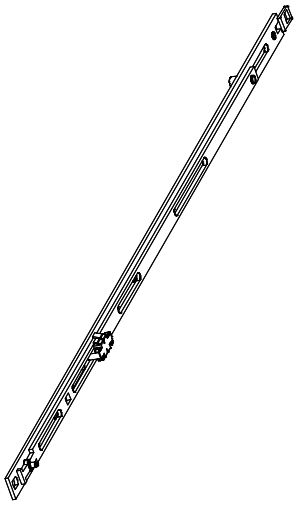	**Center Lock** *Includes:* *1 – Center Lock*	200mm 400mm	10811776 10811709
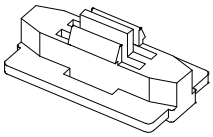	**Restrictor, 90° Travel** *Includes:* *1 – Restrictor*		10811710

ILLUSTRATION *NOT TO SCALE*	DESCRIPTION	LENGTH	PART NO.
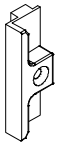	**Striker** *Includes:* *1 – Striker* *1 – #8x1 1/2" Phillips flat head screws (11808110)*		10811701
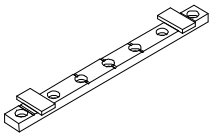	**Spacer** K606A81 *Includes:* *1 – Spacer*		10815171
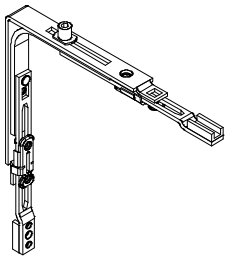	**Corner Drive, E–Cam** *Includes:* *1 – Corner Drive, E–Cam* *2 – #6x1 1/2" Phillips flat head screws (11800103)*		10811700
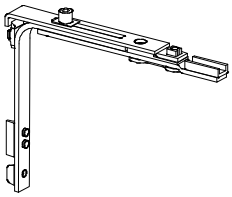	**Corner Drive, Special** *Includes:* *1 – Corner Drive, Special* *2 – #6x1 1/2" Phillips flat head screws (11800103)*		10811759
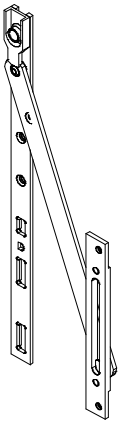	**Tilt Stay** *Includes:* *1 – Tilt Stay* *2 – #6x1 1/2" Phillips flat head screws (11800103)* *2 – #8x1 1/2" Phillips flat head screws (11808110)*		10811711

ILLUSTRATION *NOT TO SCALE*	DESCRIPTION	LENGTH	PART NO.
	Espagnolette, Centered Handle *Includes:* *1 – Espagnolette*	**Sash O.M. Width** 13 5/8″–19 1/8″ 19 1/4″–25 7/8″ 25 7/8″–32 15/16″ 33″–48 11/16″ 48 3/4″–64 7/16″ 64 1/2″–80 3/16″ 80 1/4″–95 15/16″	 10811702 10811703 10811704 10811705 10811706 10811707 10811708
	Espagnolette Extension *Includes:* *1 – Extension*	200mm 200mm w/Cam 400mm w/Cam 270mm (croppable)	10811771 10811772 10811773 10811770

PARTS

When ordering replacement Inswing Casement parts specify:

1. type of unit;
2. part number;
3. description.

NOTE: *Always determine handing of parts from the exterior (hinged side). Since the vendor determines handing from the interior, some parts may be stamped with an "L" or "R."* ***For Marvin handing identification****, an "L" will mean right hand and an "R" will mean left hand. DO NOT SPECIFY USING VENDOR METHOD.*

ILLUSTRATION *NOT TO SCALE*	DESCRIPTION	COLOR	PART NO.
	Striker *Includes:* *1 – Striker* *1 – #8x1 1/2" Phillips flat head screws (11808110)*		10811701
LH Shown 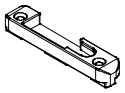	**Striker, Security** *Includes:* *1 – Security Striker* *2 – #8x1 1/2" Phillips flat head screws (11808110)*	LH RH	10811760 10811761
LH Shown 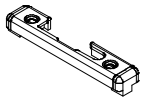	**Striker, Steel Security** *Includes:* *1 – Steel Security Striker* *2 – #8x1 1/2" Phillips flat head screws (11808110)*	LH RH	10811767 10811768
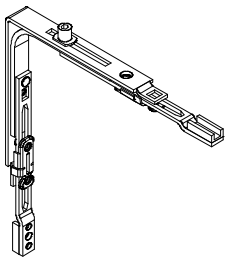	**Corner Drive, E–Cam** *Includes:* *1 – Corner Drive, E–Cam* *2 – #6x1 1/2" Phillips flat head screws (11800103)*		10811700
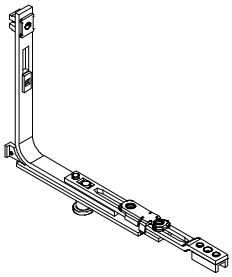	**Corner Drive, Tilt–Turn** *Includes:* *1 – Corner Drive Tilt–Turn* *1 – #6x1 1/2" Phillips flat head screws (11800103)*		10811713
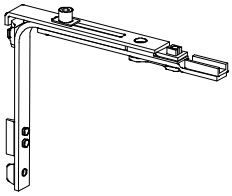	**Corner Drive, Special** *Includes:* *1 – Corner Drive, Special* *2 – #6x1 1/2" Phillips flat head screws (11800103)*		10811759
	Mishandling Device, Frame *Includes:* *1 – Mishandling Device Frame* *2 – #8x1 1/2" Phillips flat head screws (11808110)*		10811744
	Mishandling Device, Sash *Includes:* *1 – Mishandling Device Sash* *1 – #6x1 1/2" Phillips flat head screws (11808103)*		10811745

ILLUSTRATION *NOT TO SCALE*	DESCRIPTION	COLOR	PART NO.
LH Shown 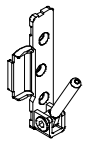	**Pivot Rest** LH or RH Corner *Includes:* *1 – Pivot Rest* *3 – #8x1 1/2" Phillips flat head screws (11808110)*	LH RH	10811752 10811753
LH Shown 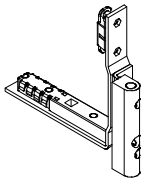	**Hinge** LH or RH Corner *Includes:* *1 – Hinge* *6 – #6x1 1/2" Phillips flat head screws (11800103)*	LH RH	10811754 10811755
LH Shown 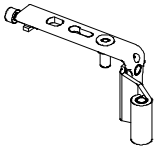	**Rebate Hinge, Arm** *Includes:* *1 – Rebate Hinge, Arm*	LH RH	10811763 10811766
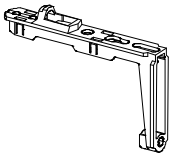	**Rebate Hinge, Sash** *Includes:* *1 – Rebate Hinge, Sash* *3 – #6x1 1/2" Phillips flat head screws (11800103)*		10811762
	Pin, Sash Stay Bearing *Includes:* *1 – Sash Stay Bearing Pin*		10811743
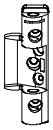	**Bearing, Sash Stay** *Includes:* *1 – Bearing* *3 – #8x1 1/2" Phillips flat head screws (11808110)*		10811742
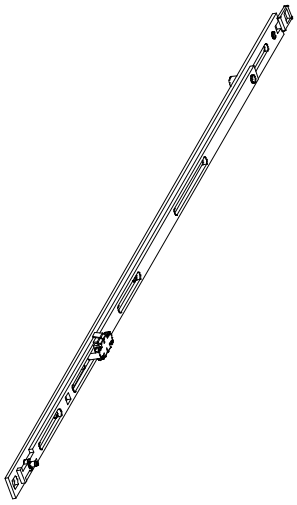	**Center Lock** *Includes:* *1 – Center Lock*	600mm	10811750

ILLUSTRATION *NOT TO SCALE*	DESCRIPTION	COLOR	PART NO.
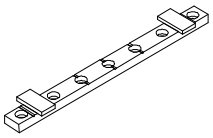	**Groove Packer / Spacer** K606A81 *Includes:* *1 – Spacer*		10815171
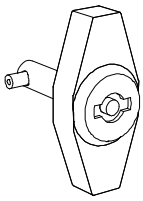	**Stationary Lock** *Includes:* *1 – Stationary lock* *2 – #8x35mm Phillips head machine screws*	BZ	10815124
	Stationary Lock Handle *Includes:* *1 – Stationary lock Handle*		10820313
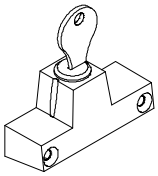	**Security Lock** *Includes:* *1 – Security Lock* *2 – #8x1 1/2" Phillips flat head screws (11808110)* *2 – #6x1 1/2" Phillips flat head screws (11800103)*	Metal Gray White	NA
(a) (b) (c) (d) (e)	**Turn Restrictor Field Applied Kit** *Includes:* *Turn Restrictor Field Applied Kit Includes:* *– Turn Restrictor 335mm (10811774) (a)* *1 – Bearing (10811775) (b)* *1 – Groove Packer (10815171) (c)* *4 – #6 x 1 1/2" Phillips flat head screws (11800103) (d)* *2 – #8 x 1 1/2" Phillips flat head screws (11808110) (e)* *1 – Instruction*		11852602
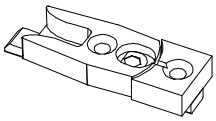	**Strike** R604C51 *Includes:* *1 – Strike* *2 – #8x1 1/2" Phillips flathead wood screws*		10815112

ILLUSTRATION *NOT TO SCALE*	DESCRIPTION	LENGTH/COLOR	PART NO.
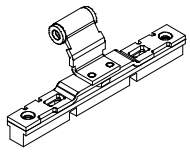	**Turn Only Rebate Hinge with Alignment** *Includes:* *1 – Turn Only Rebate Hinge* *4 – #6x1 1/2" Phillips flat head screws (11800103)*		10815174
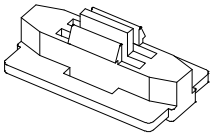	**Restrictor, 90° Travel** *Includes:* *1 – Restrictor*		10811710
	Espagnolette Extension *Includes:* *1 – Extension*	200mm 200mm w/Cam 400mm w/Cam 270mm (croppable)	10811771 10811772 10811773 10811770

ILLUSTRATION *NOT TO SCALE*	DESCRIPTION	LENGTH	PART NO.
	Espagnolette *Includes:* *1 – Espagnolette*	**Sash O.M. Height** 12 7/16″–20 5/16″ 20 3/8″–25 1/16″ 25 1/8″–32 15/16″ 33″–40 13/16″ 40 7/8″–48 11/16″ 48 3/4″–56 9/16″ 56 5/8″–64 7/16″ 64 1/2″–72 5/16″ 72 3/8″–80 3/16″ 80 1/4″–88 1/16″ 88 1/8″–95 15/16″	 10811723 10811724 10811725 10811726 10811727 10811728 10811729 10811730 10811731 10811732 10811733
	Espagnolette, Centered Handle *Includes:* *1 – Espagnolette*	**Sash O.M. Height** 13 5/8″–19 1/8″ 19 1/4″–25 7/8″ 25 7/8″–32 15/16″ 33″–48 11/16″ 48 3/4″–64 7/16″ 64 1/2″–80 3/16″ 80 1/4″–95 15/16″	 10811702 10811703 10811704 10811705 10811706 10811707 10811708

MISCELLANEOUS PARTS

When ordering replacement miscellaneous parts specify:

1. type of unit;
2. part number;
3. description.

ILLUSTRATION *NOT TO SCALE*	DESCRIPTION	COLOR	PART NO.
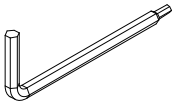	**Allen Wrench** P010A 24 *5/32″ hex wrench with recessed 3/32″ end*		10815357
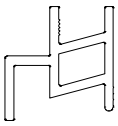	**Screen and Weep Channel** V469 *Attached with #6x3/4″ square drive truss head screws (11800675)*	WH BZ BG	15620000 15630000 15620001
	Weep Cover V470	AR BZ PB SW BG	N/A 15632099 N/A 15631299 15631199
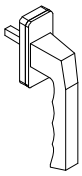	**Pistol Grip Handle** *Includes:* *1 – Pistol grip handle* *1 – Installation package with #5x35mm machine screws*	BZ WH SC BS	11900114 10815195 11900110 10143000
NOTE: Handle style may vary depending on current stock. 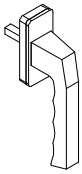	**Keyed Handle (with cylinder and keys)** *Includes:* *1 – Keyed handle with cylinder and 2 keys* *1 – Installation package with #5x35mm machine screws*	BZ WH	11900112 11900111
NOTE: Plate style may vary depending on current stock. 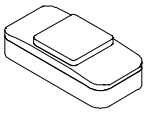	**Escutcheon Plate** R033A15 *Includes:* *1 – Escutcheon plate* *2 – #5x35mm machine screws*	BZ	NA
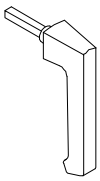	**Removable Handle (for Escutcheon)** R033A22	New Silver	NA
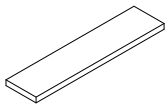	**Neoprene Setting Block for Reglazing** 5/32″ x 15/16″ x 4″		10500300

MISCELLANEOUS PARTS

NOTE: *Since the vendor determines handing from the interior, some parts may be stamped with an "L" or "R."* ***For Marvin handing identification****, an "L" will mean right hand and an "R" will mean left hand. DO NOT SPECIFY USING VENDOR METHOD.*

ILLUSTRATION *NOT TO SCALE*	DESCRIPTION	OPER./ COLOR	PART NO.
Left hand shown 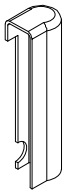	**Vertical Bottom Hinge Cap (Sash)** N591A0671L N591A0671R N591A0653L N591A0653R	**Pre 6/22/09** RH WH LH WH RH BZ LH BZ **Post 6/22/09** RH WH LH WH RH BZ LH BZ	 10815349 10815350 10815351 10815352 10815359 10815360 10815361 10815362
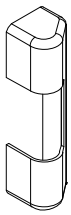	**Top and Center Hinge Cap (Frame)** Overall width 2 3/8″ (60) N391A0471 N391A0453	 WH BZ	 10815347 10815348
	Top Hinge Cap, Round Top (Frame) Overall width 2 3/8″ (60) N391A0671 N391A0653	 WH BZ	 10815277 10815278
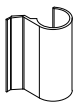	**Round Top and Center Hinge Cap (Sash)** N391A0571 N391A0553	 WH BZ	 10815345 10815346
Left hand shown 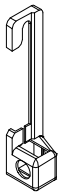	**Bottom Hinge Cap (Frame)** N591A0571L N591A0571R N591A0553L N591A0553R	**Pre 6/22/09** RH WH LH WH RH BZ LH BZ **Post 6/22/09** RH WH LH WH RH BZ LH BZ	 10815353 10815354 10815355 10815356 10815363 10815364 10815365 10815366
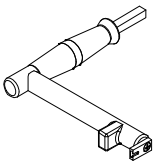	**Top and Center Hinge (Frame) Pin Puller Tool** P010A30 *Can be used as a construction handle*		 10815358

REPLACEMENT WOOD PARTS

CURRENT REPLACEMENT WOOD PARTS

	WOOD	CLAD
Subsill	W2120	– – –
Narrow Subsill	W2122	– – –
Cutback Subsill	W2124	– – –
Sill Extension	W7201	– – –
Sill Filler	– – –	W7202
Jamb Extension (exterior)	W7200	W7204
Jamb Extension (interior)	W8647	W8647
Jamb Extension Filler	W6100	– – –
Wood Glazing Bead – IG	W4102	W4102
Wood Glazing Bead – SG	W4106	W4106
Wood Glazing Bead – SG – ADL	W4100	W4100

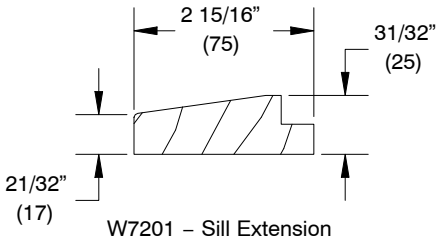

W7201 – Sill Extension

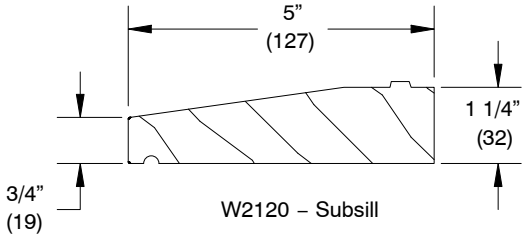

W2120 – Subsill

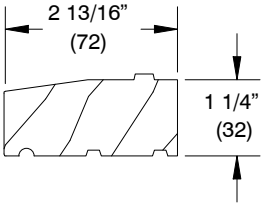

W2122 – Narrow Subsill

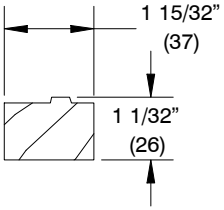

W2124 – Cutback Subsill

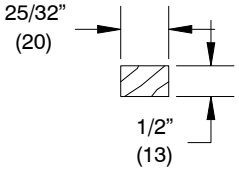

W6100 – Jamb Extension Filler

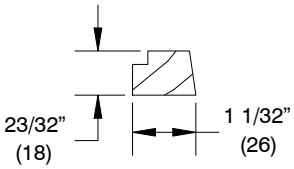

W7202 – Sill Filler

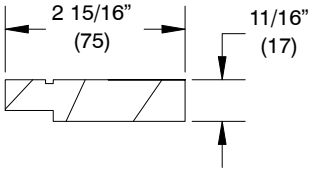

W7200 – Jamb Extension
(exterior Wood)

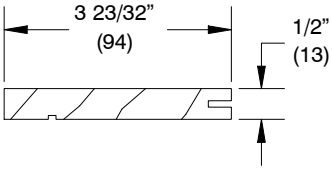

W7204 – Jamb Extension
(exterior Clad)

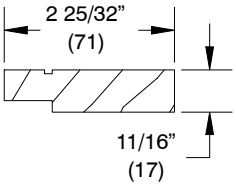

W8647 – Jamb Extension
(interior)

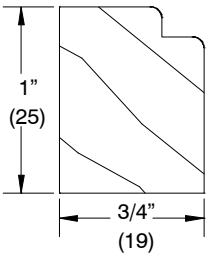

W4106 – Wood Glazing
Bead – SG

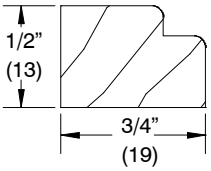

W4102 – Wood Glazing
Bead – IG

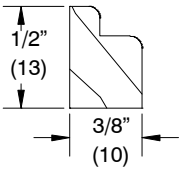

W4100 – Wood Glazing
Bead – SG – ADL

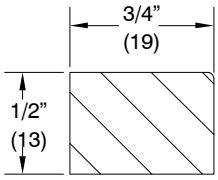

W11721– Wood Glazing
Square – IG

TO ORDER REPLACEMENT WOOD PARTS

When ordering replacement wood parts specify:

1. profile number;
2. call number or rough opening;
3. length;
4. finish.

SASH REPLACEMENT/WEATHER STRIP

ORDERING REPLACEMENT OPERATOR OR STATIONARY SASH FOR TILT-TURN, HOPPER AND INSWING CASEMENT

NOTE: *For sash produced prior to 6/06/2006, see Obsolete Sash Replacement section.*

To order replacement operating or stationary sash specify:

1. size (call number or OM of sash);
2. operation and handing;
3. glazing;
4. finish;
5. handle height (if other than standard).
6. Interior wood glazing bead profile.

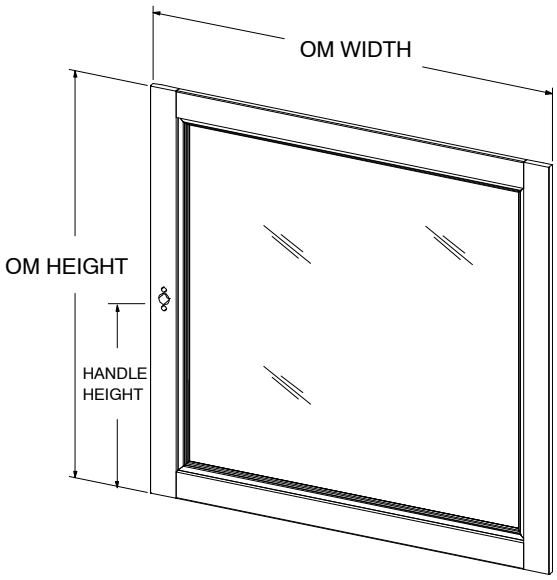

Interior View

Sash OM Height Measure from the Interior			Handle Height
12 7/16″	–	20 5/16″	5 7/16″
20 3/8″	–	25 1/16″	7 13/32″
25 1/8″	–	32 15/16″	11 1/16″
33″	–	40 13/16″	16 31/32″
40 7/8″	–	48 11/16″	20 29/32″
48 3/4″	–	56 9/16″	22 7/8″
56 5/8″	–	64 7/16″	22 7/8″
64 1/2″	–	72 5/16″	22 7/8″
72 3/8″	–	80 3/16″	40 3/32″
80 1/4″	–	88 1/16″	40 3/32″
88 1/8″	–	95 15/16″	40 3/32″

Note: Handle height is measured from the bottom of the sash to the center of the espagnolette mechanism.

ORDERING REPLACEMENT WEATHER STRIP FOR TILT-TURN, HOPPER, INSWING CASEMENT AND ROUND TOP TILT-TURN

When ordering replacement weather strip specify:

1. type of unit;
2. OM of sash measured from the interior;
3. part number;
4. description.

ILLUSTRATION *NOT TO SCALE*	DESCRIPTION	PART NUMBER
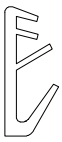	**Gasket Weather Strip** Color: Black Specify length	11900100

SCREENS AND SCREEN PARTS

ORDERING REPLACEMENT SCREENS FOR TILT-TURN, HOPPER AND INSWING CASEMENT

Full screens are standard with aluminum surround and Hi−Transparency fiberglass mesh. Aluminum mesh is available as an option in black, charcoal, bright aluminum, or bright bronze. Determine the outside measurement of the existing screen. Surrounds are available in all standard and select colors.

When ordering replacement screen specify:

1. size; If there is no existing screen to obtain the OM of the panel, determine the size of the EP by using the conversion chart below. The daylight opening is the measurement of the visible glass.
2. color of surround;
3. glass type(if other than standard)

Screen Sizes for Tilt−Turn, Hopper and Inswing Casement Manufactured between 1984−Present

Daylight Opening to OM of Screen

Daylight Width + 3 1/2″ (89) = OM Width of Screen

Daylight Height + 4 5/16″ (110) = OM Height of Screen

NOTE: OM should not include lip.

NOTE: Screens feature plunger type mounting system.

TILT-TURN, HOPPER AND INSWING CASEMENT SCREEN PARTS 2−27−2012 TO PRESENT

ILLUSTRATION *NOT TO SCALE*	DESCRIPTION	COLOR	PART NO.
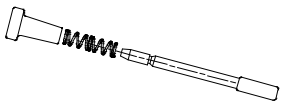	**Plunger and Spring Assembly** Used 2/2012 to present *Includes:* *1 − Plunger bolt (metal)* *1 − Plunger bolt cap (black)* *1 − Plunger bolt spring*	Black	10500706
	Screen Mounting Receptacle M111	White	05070411

OBSOLETE SCREENS AND SCREEN PARTS

ORDERING REPLACEMENT SCREENS FOR TILT-TURN, HOPPER AND INSWING CASEMENT

Full screens are standard with aluminum surround and Hi–Transparency fiberglass mesh. Aluminum mesh is available as an option in black, charcoal, bright aluminum, or bright bronze. Determine the outside measurement of the existing screen. Surrounds are available in all standard and select colors.

When ordering replacement screen specify:

1. size; If there is no existing screen to obtain the OM of the panel, determine the size of the EP by using the conversion chart below. The daylight opening is the measurement of the visible glass.
2. color of surround;
3. glass type(if other than standard)

Screen Sizes for Tilt–Turn, Hopper and Inswing Casement Manufactured between 1984–Present

Daylight Opening to OM of Screen

Daylight Width + 3 1/2″ = OM Width of Screen
Daylight Height + 4 5/16″ = OM Height of Screen

NOTE: OM should not include lip.

NOTE: Screens feature plunger type mounting system.

TILT-TURN, HOPPER AND INSWING CASEMENT SCREEN PARTS PRE 2–27–2012

ILLUSTRATION *NOT TO SCALE*	DESCRIPTION	COLOR	PART NO.
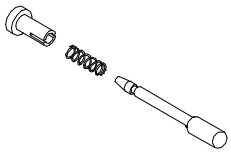	**Plunger and Spring Assembly** M0102 *Includes:* *1 – Plunger bolt (metal)* *1 – Plunger bolt cap (black)* *1 – Plunger bolt spring*	Black	03070731
	Screen Mounting Receptacle M111	White	05070411
	Spline, Screen V1269 Specify lineal feet needed	Black	15221495
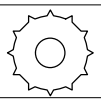	**Spline, Screen** V129	Black	Discontinued Replace with V1269
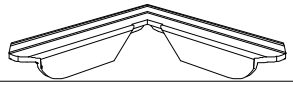	**Corner Key Screen** M0121		15225301
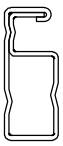	**Screen Surround, Aluminum Profile** A133 Available in 168″ (4267) length	SW BZ PB BN EG	18801100 15231799 15231899 15231699 15231999

INTERIOR ENERGY PANELS AND PARTS

ORDERING REPLACEMENT ENERGY PANELS FOR TILT-TURN, HOPPER AND INSWING CASEMENT

If you are replacing an existing energy panel, determine the outside measurement of the existing energy panel. If there is no existing energy panel from which to obtain the OM of the panel, determine the size of the energy panel by using the conversion below. The daylight opening is the measurement of the visible glass. Energy panels are available in a white aluminum surround (interior panel).

NOTE: Interior energy panel surround changed from vinyl to metal in 1994. Replacement vinyl parts are not available. Metal surround models are compatible with all Tilt-Turn, Hopper and Inswing Casement units.

When ordering energy panels specify type of unit, size and glass type.

Interior Energy Panels for Tilt-Turn, Hopper and Inswing Casement Manufactured between 1984 – Present

Daylight Opening to OM of IEP

Daylight Width + 1 3/8″ = OM Width of IEP
Daylight Height + 1 3/8″ = OM Height of IEP

TILT-TURN, HOPPER AND INSWING CASEMENT ENERGY PANEL PARTS

When ordering energy panels parts specify quantity, description of part including color and part number.

ILLUSTRATION *NOT TO SCALE*	DESCRIPTION	COLOR	PART NO.
	Corner Key, Interior Energy Panel M950		15470016
	Weatherstrip, Interior Energy Panel M0412 Specify Length	WH	15610097
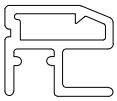	**Interior Energy Panel Surround, Aluminum Profile** A149 For 1/8″ glass and 3/16″ glass Available in 150″ (3810) length Note: Must use V235 for 1/8″ glass	WH	18600899
	Spline V235 For 1/8″ glass only Specify Length	WH	15221211
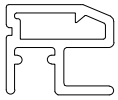	**Interior Energy Panel Surround, Aluminum Profile** A163 For 3/16″ featherweight laminated glass Available in 150″ (3810) length	WH	18600898

OBSOLETE PARTS

When ordering replacement Tilt-Turn parts specify:

1. type of unit;
2. part number;
3. description.

In most cases, Tilt-Turn hardware will feature model numbers stamped on individual parts. The fifth character of the model number indicates the series (example – M490B32). The newest series hardware is sent for replacement. All model numbers are for reference only, Marvin part numbers are required when ordering replacement parts.

NOTE: *Always determine handing of parts with Marvin standard, as viewed from the exterior (Hinged side). Vendor numbers provided view handing from interior.* ***DO NOT SPECIFY USING VENDOR METHOD.***

ILLUSTRATION *NOT TO SCALE*	DESCRIPTION	OPER./ COLOR	PART NO.
	Top Hinge Receiver (Frame) N390A302 *Includes:* *1 – Top hinge receiver* *3 – #8x1 1/2" Phillips flathead wood screws*		10815266
	Top Hinge Receiver Pin (Frame) F710D52		10815267
Left hand shown	**Bottom Hinge (Sash)** N512A0310R N512A0310L *Includes:* *1 – Bottom hinge* *6 – #6x1 1/2" Phillips flathead wood screws* *1 – #8x1 1/2" Phillips flathead wood screws*	LH RH	10815268 10815269
Right Hand Left Hand	**Bottom Hinge Receiver (Frame)** N512A0301R N512A0301L *Includes:* *1 – Bottom hinge receiver* *3 – #8x1 1/2" Phillips flathead wood screws*	LH RH	10815270 10815271
	Strike R604C51 *Includes:* *1 – Strike* *2 – #8x1 1/2" Phillips flathead wood screws*		10815112
	Strike, Corner R604C52 *Includes:* *1 – Strike* *2 – #8x1 1/2" Phillips flathead wood screws*		10815111
	Tilt Position Clip F400C20		10815197

OBSOLETE PARTS

ILLUSTRATION *NOT TO SCALE*	DESCRIPTION	OPER./ COLOR	PART NO.
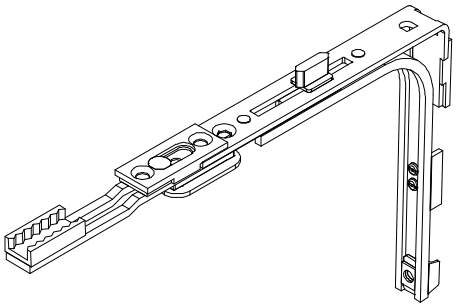	**Corner Drive** R600A01 *Includes:* *1 – Corner drive* *4 – #6 x 1 1/2″ Phillips flathead wood screws* NOTE: For units with sash OM of 14 11/16″ – 18 21/32″.		10815040
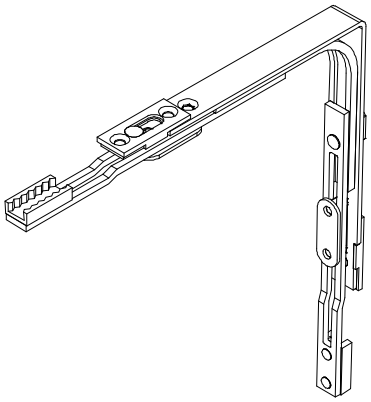	**Corner Drive** R600A11 *Includes:* *1 – Corner drive* *6 – #6 x 1 1/2″ Phillips flathead wood screws* NOTE: For units with sash OM of 18 11/16″ and above.		10815039
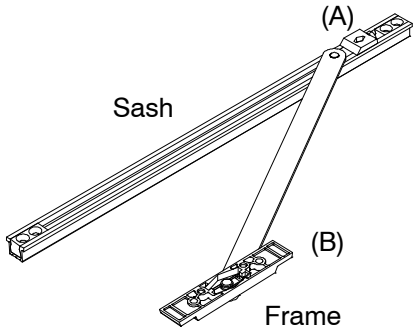 *(This item is for limiting the inswing position.)*	**Friction Limiter** NOTE: Both Sash (A) and Frame (B) parts must be ordered for a **complete assembly**. Spacer (10815171) is used with friction assembly and should also be ordered. ***Sash (A)*** K011B204 Used when daylight opening of the unit is 13 7/8″ to 15″. K011A25 Used when daylight opening of the unit is over 15″. ***Frame (B)*** Friction Bearing Stop KO11A11 *Includes:* *1 – Friction limiter assembly* *4 – #8 x 1 1/2″ Phillips flathead wood screws (frame)* *4 – #6 x 1 1/2″ Phillips flathead wood screws (sash)*		10815302 10815169 10815168
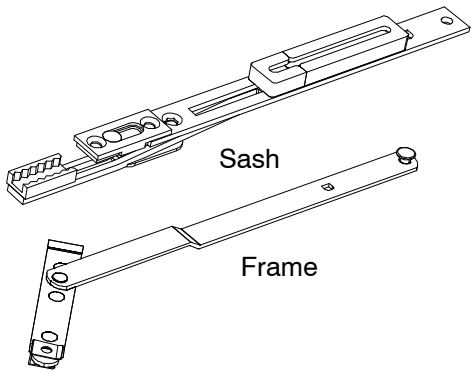 *(This item is for limiting the tilt position.)*	**Stabilizer Arm Assembly** F502A70 *Includes:* *1 – Stabilizer arm assembly* *4 – #6 x 1 1/2″ Phillips flathead wood screws (sash)* *3 – #8 x 1 1/2″ Phillips flathead wood screws (frame)*		10815175

OBSOLETE PARTS

ILLUSTRATION *NOT TO SCALE*	DESCRIPTION	OPER./ COLOR	PART NO.
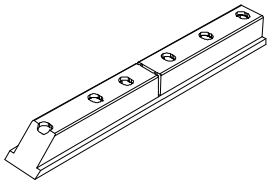	**Spacer** R600A43		10815095
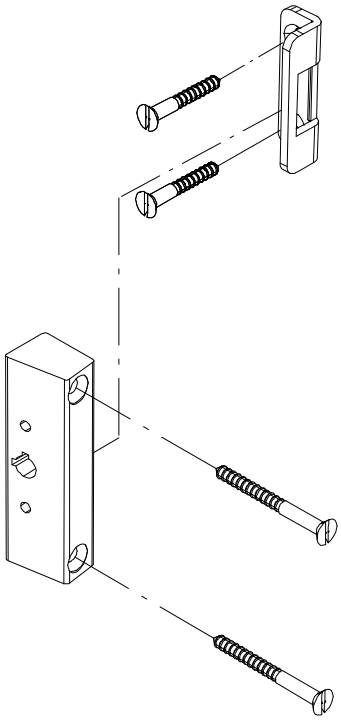	**Security Lock** M811A29 M811A20 *Includes:* *1 – Lock with strike* *2 – #7x1″ slotted flathead screws (strike)* *2 – #7x1 1/2″ slotted flathead screws (lock)*	WH ZYD	10815120 10815125
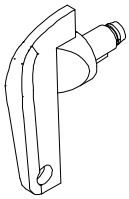	**Security Key**	WH ZYD	10815127 10815126

NOTE: *Always determine handing of parts with Marvin standard, as viewed from the exterior (Hinged side). Vendor numbers provided view handing from interior.* ***DO NOT SPECIFY USING VENDOR METHOD.***

Espagnolette

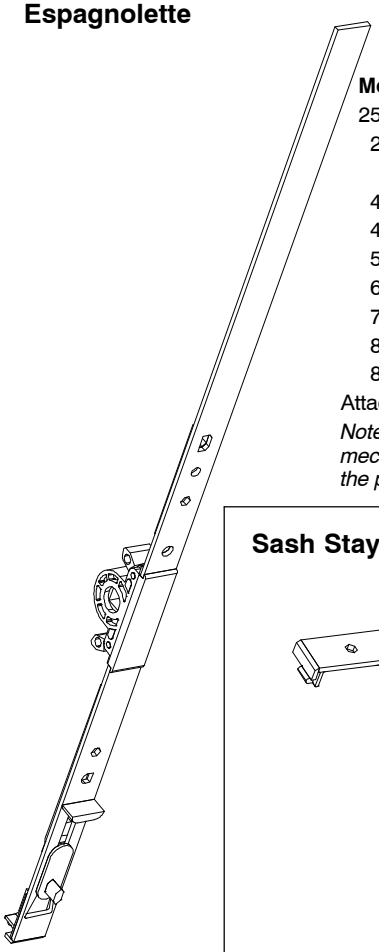

Sash OM Height Measure from the Interior			Handle Height	Model No.	Part No.
25 3/32″	or less		7 7/16″	R601B10	10815041
25 1/8″	–	32 31/32″	11 1/8″	R601B20	10815042
33″	–	40 27/32″	16 15/16″	R601B40	10815043
40 7/8″	–	48 23/32″	20 15/16″	R601B50	10815044
48 3/4″	–	56 19/32″	22 15/16″	R601B60	10815045
56 5/8″	–	64 15/32″	22 15/16″	R601B70	10815046
64 1/2″	–	72 11/32″	22 15/16″	R601B80	10815047
72 3/8″	–	80 7/32″	44 9/16″	R602B10	10815048
80 1/4″	–	88 3/32″	44 9/16″	R602B20	10815049
88 1/8″	–	93 3/16″	44 9/16″	R602B30	10815050

Attached with #6x1 1/2″ Phillips flathead wood screws.

Note: Handle height is measured from the bottom of the sash to the center of the espagnolette mechanism. In addition, if exact sash OM height is provided, the replacement espagnolette will be cut to the proper length.

Sash Stay Guide

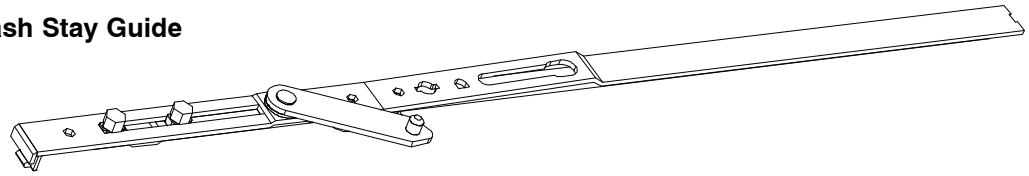

Sash OM Width Measured from the Interior			Model No.	Part No.
25 1/2″	or less		F502A10	10815068
25 17/32″	–	33 3/8″	F502A20	10815069
33 13/32″	–	41 1/4″	F502A30	10815070
41 9/32″	–	49 1/8″	F502A40	10815071
49 5/32″	–	57″	F502A50	10815072
57 1/32″	–	64 7/8″	F502A60	10815073

Attached with #6x 1 1/2″ Phillips flathead wood screws

NOTE: If exact sash OM width is provided, the replacement sash stay guide will be cut to the proper length.

Top Hinge (Sash)

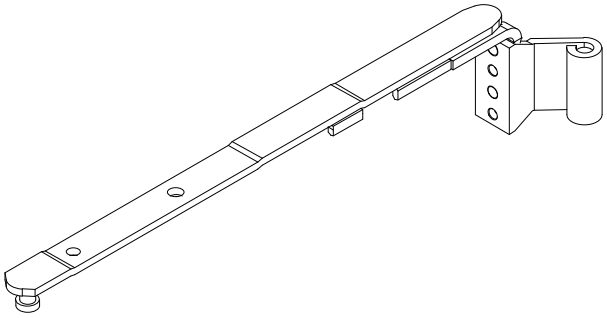

Sash OM Width Measured from the Interior			Model No.	Left Part No.	Right Part No.
25 1/2″		or less	F526A1200R/L	10815260	10815261
25 17/32″	–	33 3/8″	F526A1300R/L	10815262	10815263
33 13/32″	–	64 7/8″	F526A1500R/L	10815264	10815265

Variable Espagnolette (For Special Handle Height Only)

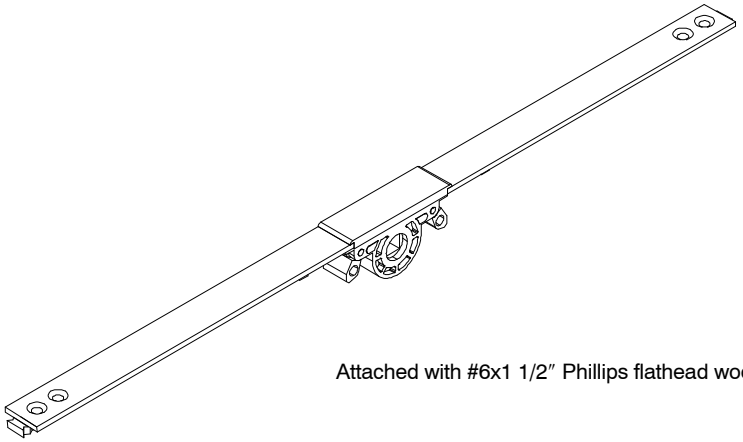

Model No.	Part No.
R610A05	10815051
R610C11	10815052
R610C21	10815053
R610C31	10815054
R610C41	10815055
R610C51	10815056

Attached with #6x1 1/2″ Phillips flathead wood screws.

Center Lock

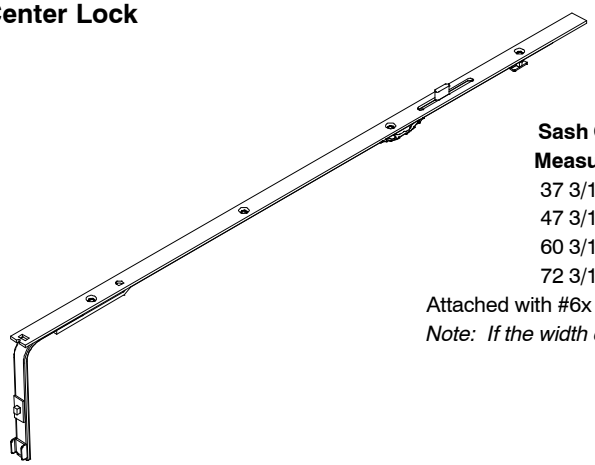

Sash OM Width or Height Measured from the Interior			Model No.	Part No.
37 3/16″	–	47 5/32″	R605A10	10815105
47 3/16″	–	60 5/32″	R605A20	10815106
60 3/16″	–	72 5/32″	R605A30	10815107
72 3/16″	–	95 3/16″	R605A40	10815108

Attached with #6x 1 1/2″ Phillips flathead wood screws

Note: If the width or height of the unit is less than 40″ no center lock is required on that side.

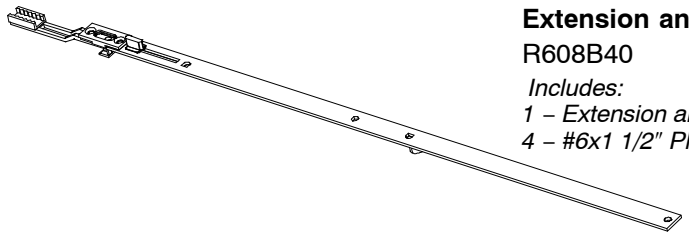

Extension and Lock

R608B40 — 10815172

Includes:
1 – Extension and lock
4 – #6x1 1/2″ Phillips flathead wood screws

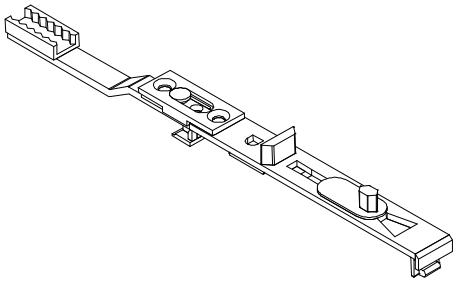

Bottom Extension

R610A02 — 10815058

Includes:
1 – Bottom extension
4 – #6x1″ Phillips flathead wood screws

OBSOLETE PARTS

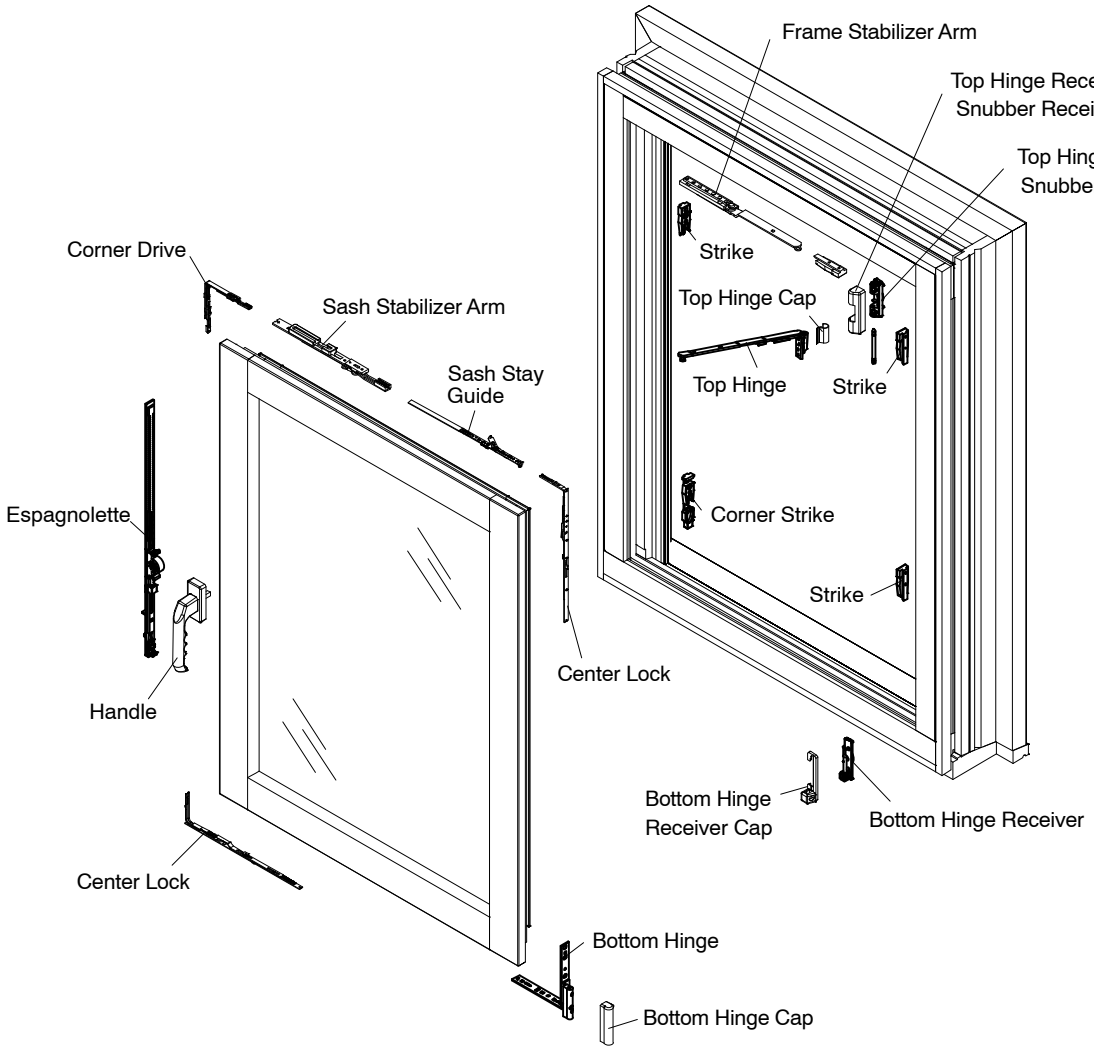

OBSOLETE PARTS

When ordering replacement Hopper parts specify:

1. type of unit;
2. part number;
3. description.

In most cases, Hopper hardware will feature model numbers stamped on individual parts. The fifth character of the model number indicates the series (example – M490A35). The newest series hardware is sent for replacement. All model numbers are for reference only, Marvin part numbers are required when ordering replacement parts.

ILLUSTRATION *NOT TO SCALE*	DESCRIPTION	OPER./ COLOR	PART NO.
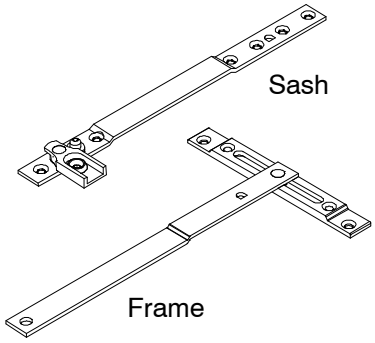	**Sash Limiter Assembly** F010D10 *Includes:* *1 – Sash limiter assembly* *4 – #6x1 1/2" Phillips flathead wood screws (sash)* *2 – #8x1 1/2" Phillips flathead wood screws (frame)*		10815176
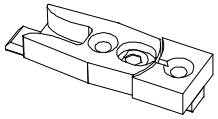	**Strike** R604C51 *Includes:* *1 – Strike* *2 – #8x1 1/2" Phillips flathead wood screws*		10815112
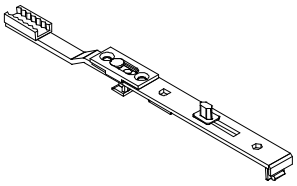	**Top Corner Connector** M720A11 *Includes:* *1 – Top corner connector* *3 – #6x1 1/2" Phillips flathead wood screws*		10815202
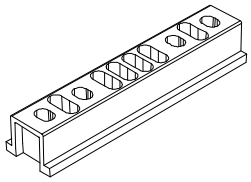	**Shim** M490A38		10815157

Center Lock

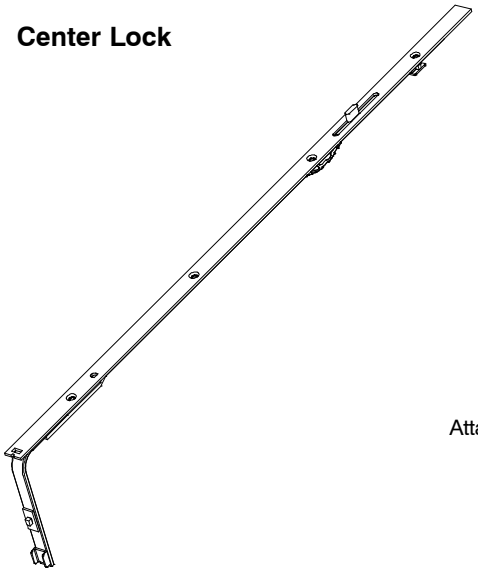

Sash OM Height Measured from the Interior			Model No.	Part No.
37 1/4″	–	40 3/16″	R605A10	10815105
40 1/4″	–	48 3/16″	R605A10	10815105
48 1/4″	–	52 3/16″	R605A20	10815106
52 1/4″	–	55 3/16″	R605A20	10815106
55 1/4″	–	59 3/16″	R605A20	10815106

Attached with #6x 1 1/2″ Phillips flathead wood screws

Operator

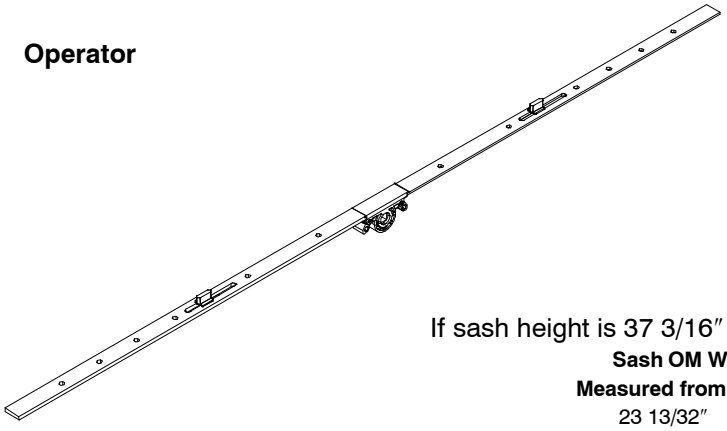

If sash height is 37 3/16″ or less the following operators are used:

Sash OM Width Measured from the Interior			Model No.	Part No.
23 13/32″	or less		M500A90	10815303
23 7/16″	–	37 3/16″	M500A10	10815160
37 1/4″	–	42 11/16″	M500A20	10815161
42 3/4″	–	58 11/16″	M500A30	10815162
58 3/4″	–	69 3/16″	M500A40	10815163

Attached with #6x1 1/2″ Phillips flathead wood screws

Variable Espagnolette

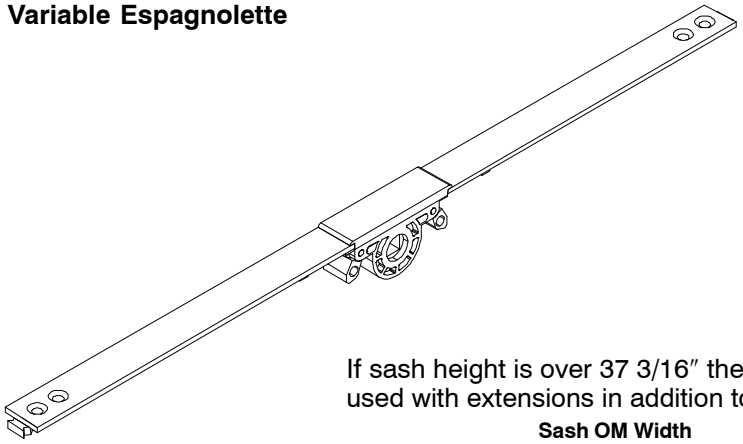

If sash height is over 37 3/16″ the following variable espagnolettes are used with extensions in addition to side strikes and locks.

Sash OM Width Measured from the Interior	Model No.	Part No.
21 15/16″ or less	R610A05	10815051
22″ – 40 7/16″	R610C11	10815052
40 1/2″ – 55 15/16″	R610C21	10815053
56″ – 69 3/16″	R610C31	10815054

Attached with #6x1 1/2″ Phillips flathead wood screws.

OBSOLETE PARTS

When ordering replacement Inswing Casement parts specify:

1. type of unit;
2. part number;
3. description.

In most cases, Inswing Casement hardware will feature model numbers stamped on individual parts. The fifth character of the model number indicates the series (example – M490B31). The newest series hardware is sent for replacement. All model numbers are for reference only, Marvin part numbers are required when ordering replacement parts.

NOTE: *Always determine handing of parts with Marvin standard, as viewed from the exterior (Hinged side). Vendor numbers provided view handing from interior.* ***DO NOT SPECIFY USING VENDOR METHOD.***

ILLUSTRATION *NOT TO SCALE*	DESCRIPTION	OPER./ COLOR	PART NO.
Left hand shown 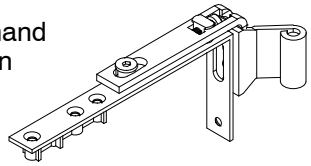	**Top Hinge (Sash)** N612A0320R N612A0320L *Includes:* *1 – Top hinge* *5 – #6x1 1/2" Phillips flathead wood screws*	LH RH	10815274 10815275
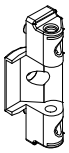	**Top and Center Hinge Receiver (Frame)** N390A302 *1 – Top hinge receiver* *3 – #8x1 1/2" Phillips flathead wood screws*		10815266
	Hinge Receiver Pin (Frame) F710D52		10815267
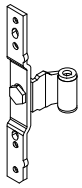	**Center Hinge (Sash)** N612A0360 *Includes:* *2 – M490A38 spacers*		10815276
Left hand shown 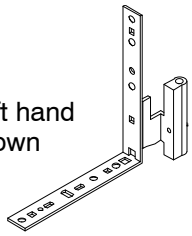	**Bottom Hinge (Sash)** N512A0310R N512A0310L *Includes:* *1 – Bottom hinge* *6 – #6x1 1/2" Phillips flathead wood screws* *1 – #8x1 1/2" Phillips flathead wood screw*	LH RH	10815268 10815269
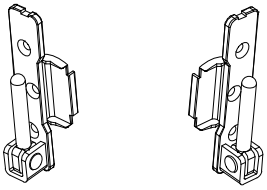 Right Hand Left Hand	**Bottom Hinge Receiver (Frame)** N512A0301R N512A0301L *Includes:* *1 – Bottom hinge receiver* *3 – #8x1 1/2" Phillips flathead wood screws*	LH RH	10815270 10815271
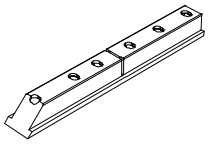	**Spacer** R600B43		10815095

OBSOLETE PARTS

ILLUSTRATION *NOT TO SCALE*	DESCRIPTION	OPER./ COLOR	PART NO.
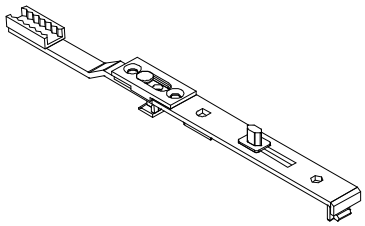	**Top Corner Connector** M720A11 *Includes:* *1 – Top corner connector* *3 – #6x1 1/2″ Phillips flathead wood screws*		10815202
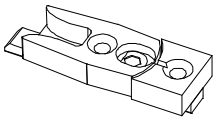	**Strike** R604C51 *Includes:* *1 – Strike* *2 – #8x1 1/2″ Phillips flathead wood screws*		10815112
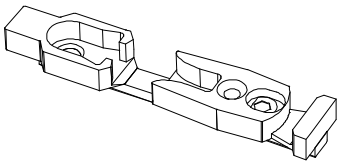	**Strike, Corner** R604C52 *Includes:* *1 – Strike* *2 – #8x1 1/2″ Phillips flathead wood screws*		10815111
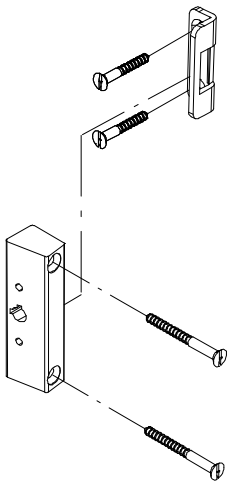	**Security Lock** M811A29 M811A20 *Includes:* *1 – Lock with strike* *2 – #7x1″ slotted flathead screws (strike)* *2 – #7x1 1/2″ slotted flathead screws (lock)*	WH YZD	10815120 10815125
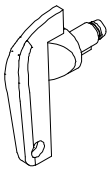	**Security Key**	WH YZD	10815127 10815126

OBSOLETE PARTS

ILLUSTRATION *NOT TO SCALE*	DESCRIPTION	OPER./ COLOR	PART NO.
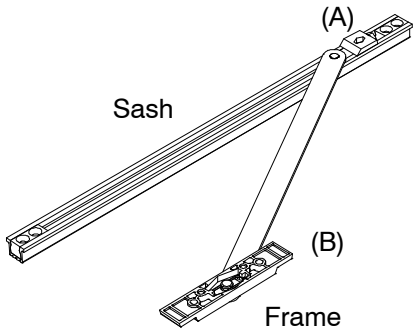	**Friction Limiter Assembly** ***Sash (A)*** K011B204 Used when daylight opening of the unit is 13 7/8″ to 15″. K011A25 Used when daylight opening of the unit is over 15″. ***Frame (B)*** Friction Bearing Stop KO11A11 NOTE: Spacer 10815171 is used with friction assembly and should also be ordered. *Includes:* *1 – Friction limiter assembly* *4 – #8x1 1/2″ Phillips flathead wood screws (frame)* *4 – #6x1 1/2″ Phillips flathead wood screws (sash)*		10815302 10815169 10815168
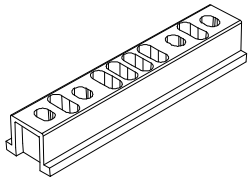	**Shim** M490A38		10815157

Espagnolette

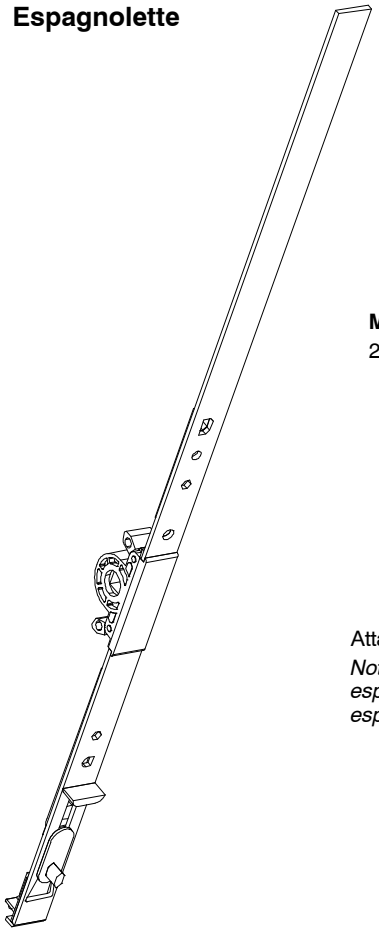

Sash OM Height Measure from the Interior			Handle Height	Model No.	Part No.
25 3/32″	or less		7 7/16″	R601B10	10815041
25 1/8″	–	32 31/32″	11 1/8″	R601B20	10815042
33″	–	40 27/32″	16 15/16″	R601B40	10815043
40 7/8″	–	48 23/32″	20 15/16″	R601B50	10815044
48 3/4″	–	56 19/32″	22 15/16″	R601B60	10815045
56 5/8″	–	64 15/32″	22 15/16″	R601B70	10815046
64 1/2″	–	72 11/32″	22 15/16″	R601B80	10815047
72 3/8″	–	80 7/32″	44 9/16″	R602B10	10815048
80 1/4″	–	88 3/32″	44 9/16″	R602B20	10815049
88 1/8″	–	93 3/16″	44 9/16″	R602B30	10815050

Attached with #6x1 1/2″ Phillips flathead wood screws.

Note: Handle height is measured from the bottom of the sash to the center of the espagnolette mechanism. In addition, if exact sash OM height is provided, the replacement espagnolette will be cut to the proper length.

Variable Espagnolette (For Special Handle Height Only)

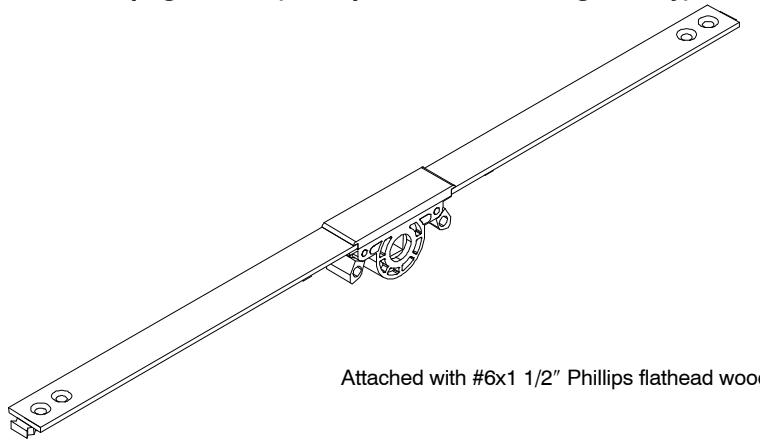

Model No.	Part No.
R610A05	10815051
R610C11	10815052
R610C21	10815053
R610C31	10815054
R610C41	10815055
R610C51	10815056

Attached with #6x1 1/2″ Phillips flathead wood screws.

OBSOLETE PARTS

Center Lock

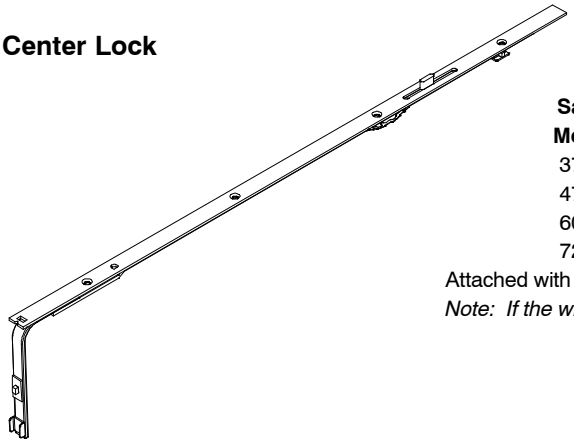

Sash OM Width or Height Measured from the Interior			Model No.	Part No.
37 3/16″	–	47 5/32″	R605A10	10815105
47 3/16″	–	60 5/32″	R605A20	10815106
60 3/16″	–	72 5/32″	R605A30	10815107
72 3/16″	–	95 3/16″	R605A40	10815108

Attached with #6x1 1/2″ Phillips flathead wood screws

Note: If the width or height of the unit is greater than 40″ a center lock is required.

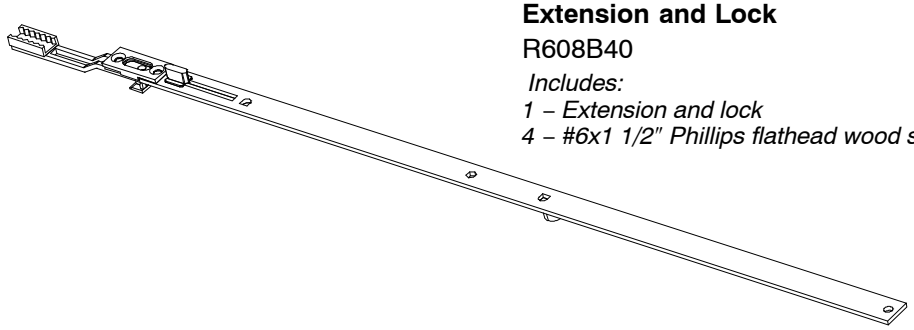

Extension and Lock

R608B40 — 10815172

Includes:
1 – Extension and lock
4 – #6x1 1/2″ Phillips flathead wood screws

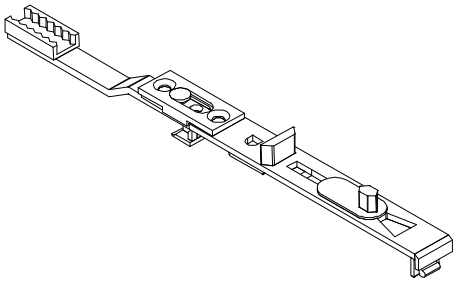

Bottom Extension

R610A02 — 10815058

Includes:
1 – Bottom extension
4 – #6x1″ Phillips flathead wood screws

OBSOLETE PARTS

When ordering replacement Round Top Tilt-Turn parts specify:

1. type of unit;
2. part number;
3. description.

In most cases, Round Top Tilt-Turn hardware will feature model numbers stamped on individual parts. The fifth character of the model number indicates the series (example – R608C02). The newest series hardware will be sent for replacement. All model numbers are for reference only, Marvin part numbers are required when ordering replacement parts.

NOTE: *Always determine handing of parts with Marvin standard, as viewed from the exterior (Hinged side). Vendor numbers provided view handing from interior.* ***DO NOT SPECIFY USING VENDOR METHOD.***

ILLUSTRATION *NOT TO SCALE*	DESCRIPTION	OPER./ COLOR	PART NO.
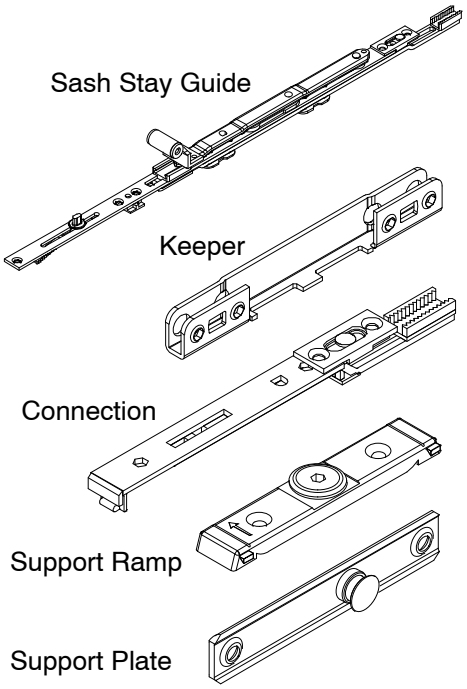	**Round Top Tilt-Turn Hardware** R608A08 *Includes:* *1 – Sash stay guide* *1 – Keeper* *1 – Connection* *1 – Support ramp* *1 – Support plate* *13 – #6x1 1/2" Phillips flathead wood screws (sash stay guide and connection)* *2 – #8x1 1/2" Phillips flathead wood screws (support ramp)* NOTE: Individual parts not available as separate items.		10815272
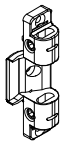	**Top Hinge Receiver (Frame)** N390A034 *Includes:* *1 – Top hinge receiver* *3 – #8x1 1/2" Phillips flathead wood screws*		10815273
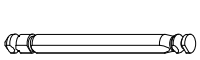	**Top Hinge Receiver Pin** F710D52		10815267
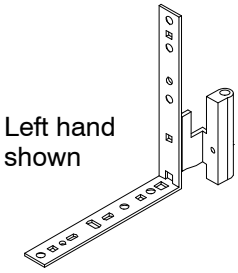	**Bottom Hinge (Sash)** N512A0310R N512A0310L *Includes:* *1 – Bottom hinge* *6 – #6x1 1/2" Phillips flathead wood screws* *1 – #8x1 1/2" Phillips flathead wood screw*	LH RH	10815268 10815269

OBSOLETE PARTS

NOTE: *Always determine handing of parts with Marvin standard, as viewed from the exterior (Hinged side). Vendor numbers provided view handing from interior.* ***DO NOT SPECIFY USING VENDOR METHOD.***

ILLUSTRATION *NOT TO SCALE*	DESCRIPTION	OPER./ COLOR	PART NO.
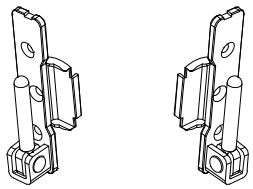 Right Hand Left Hand	**Bottom Hinge Receiver (Frame)** N512A0301R N512A0301L *Includes:* *1 – Bottom hinge receiver* *3 – #8x1 1/2″ Phillips flathead wood screws*	LH RH	10815270 10815271
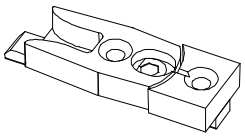	**Strike** R604C51 *Includes:* *1 – Strike* *2 – #8x1 1/2″ Phillips flathead wood screws*		10815112
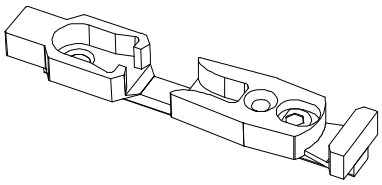	**Strike, Corner** R604C52 *Includes:* *1 – Strike* *2 – #8x1 1/2″ Phillips flathead wood screws*		10815111
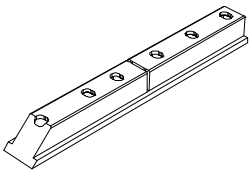	**Spacer** R600B43		10815095
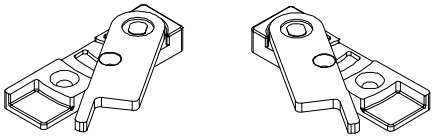 Right Hand Left Hand	**Safety Device, Sash** M803A00R M803A00L *Includes:* *1 – Safety device* *1 – #6 x 1 1/2″ Phillips flathead wood screws*	LH RH	10815182 10815181
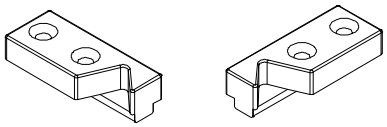 Right Hand Left Hand	**Safety Device Spacer, Frame** M802A95R M802A95L *Includes:* *1 – Spacer* *2 – #8 x 1 1/2″ Phillips flathead wood screws*	LH RH	10815184 10815183

Espagnolette

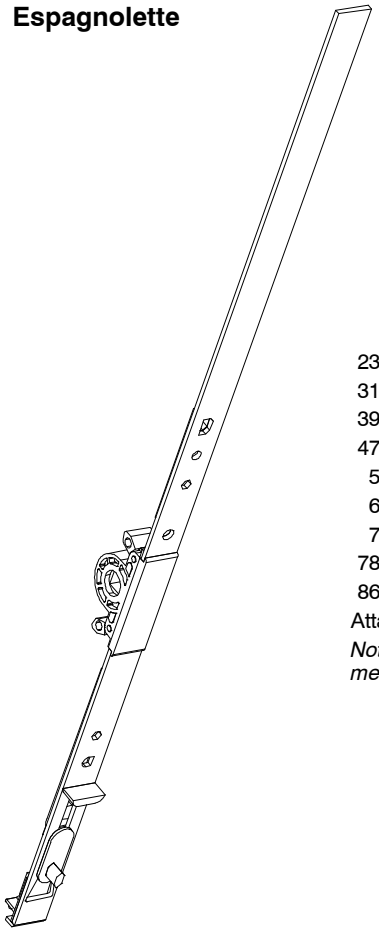

Bottom of Sash to Springline			Handle Height	Model No.	Part No.
23 7/8″	or less		7 7/16″	R601B10	10815041
23 29/32″	–	31 5/8″	11 1/8″	R601B20	10815042
31 21/32″	–	39 1/2″	16 15/16″	R601B40	10815043
39 17/32″	–	47 3/8″	20 15/16″	R601B50	10815044
47 21/32″	–	55 1/4″	22 15/16″	R601B60	10815045
55 9/32″	–	63 1/8″	22 15/16″	R601B70	10815046
63 5/32″	–	71″	22 15/16″	R601B80	10815047
71 1/32″	–	78 1/2″	44 9/16″	R602B10	10815048
78 17/32″	–	86 1/2″	44 9/16″	R602B20	10815049
86 17/32″	–	94 1/2″	44 9/16″	R602B30	10815050

Attached with #6x1 1/2″ Phillips flathead wood screws.

Note: Handle height is measured from the bottom of the sash to the center of the espagnolette mechanism.

Variable Espagnolette (For Special Handle Height Only)

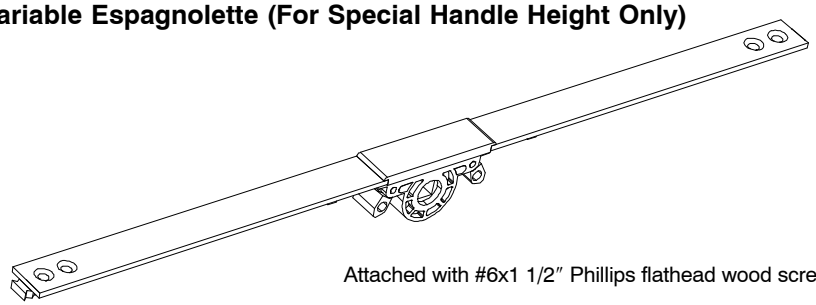

Model No.	Part No.
R610A05	10815051
R610C11	10815052
R610C21	10815053
R610C31	10815054
R610C41	10815055
R610C51	10815056

Attached with #6x1 1/2″ Phillips flathead wood screws.

Round Top Connection

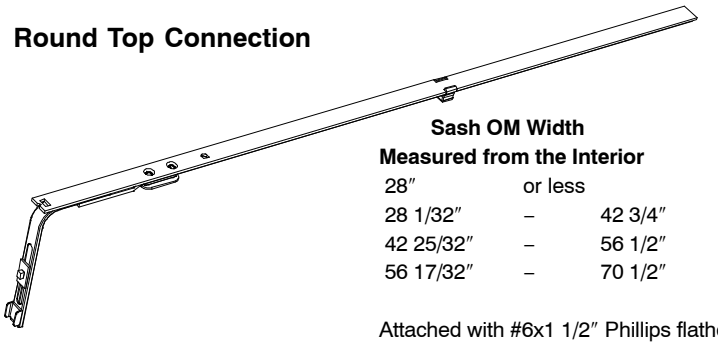

Sash OM Width Measured from the Interior			Bottom of Sash to Springline			Model No.	Part No.
28″	or less		36″	or less		R608A72	10815151
28 1/32″	–	42 3/4″	36 1/32″	–	48″	R608A73	10815152
42 25/32″	–	56 1/2″	48 1/32″	–	62″	R608A74	10815153
56 17/32″	–	70 1/2″	62 1/32″	–	75 1/2″	R608A75	10815154

Attached with #6x1 1/2″ Phillips flathead wood screws.

Note: Units with a sash springline over 75 1/2″ require Extension and Lock 10815172.

OBSOLETE PARTS

ILLUSTRATION *NOT TO SCALE*	DESCRIPTION	OPER./ COLOR	PART NO.
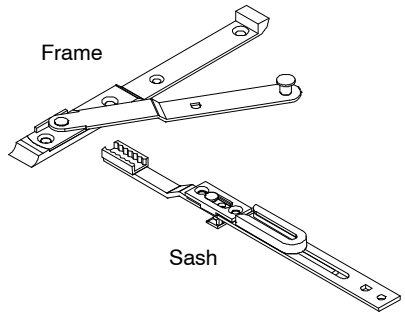	**Round Top Stabilizer Arm Assembly** R608C60 *Includes:* *1 – Stabilizer arm assembly* *3 – #6x1 1/2″ Phillips flathead wood screws (sash)* *4 – #8x1 1/2″ Phillips flathead wood screws (frame)*		10815223
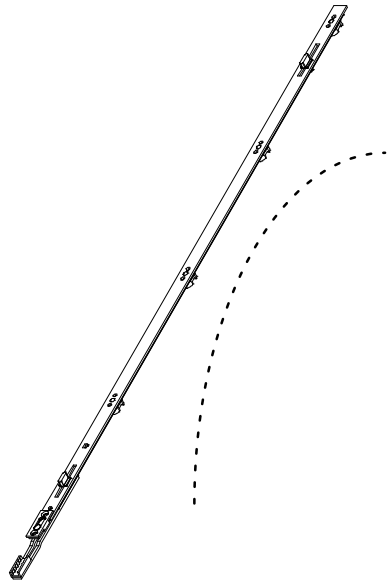	**Round Top Arch Lock** R608A10 *Includes:* *1 – Arch lock* *11 – #6x1 1/2″ Phillips flathead wood screws* NOTE: Frame must have 20″ minimum radius for application. Lock must be formed to unit radius in the field.		10815165
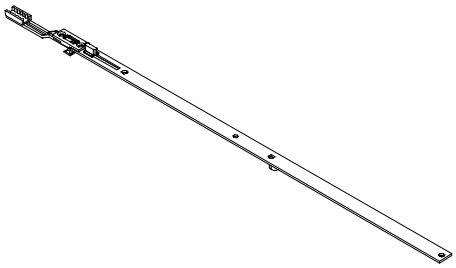	**Extension and Lock** R608B40 *Includes:* *1 – Extension and lock* *4 – #6x1 1/2″ Phillips flathead wood screws*		10815172
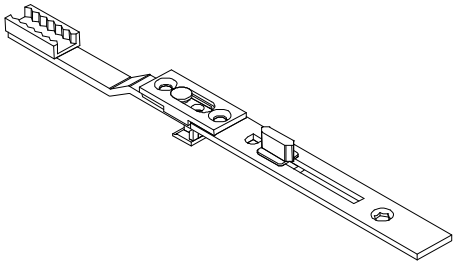	**Round Top Upper Lock** R608B20 *Includes:* *1 – Extension and lock* *4 – #6x1 1/2″ Phillips flathead wood screws* NOTE: Frame must have less than 20″ radius for application.		10815164

OBSOLETE MISCELLANEOUS PARTS

Obsolete parts are subject to availability.

NOTE: *Always determine handing of parts with Marvin standard, as viewed from the exterior (Hinged side). Vendor numbers provided view handing from interior.* ***DO NOT SPECIFY USING VENDOR METHOD.***

ILLUSTRATION *NOT TO SCALE*	DESCRIPTION	OPER./COLOR	PART NO.
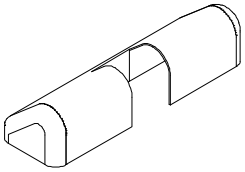	**Top Hinge Cap (Frame)** ***Used up to 10/97*** Overall width 2 13/16″ (71)	WH BN	10815320 10815322
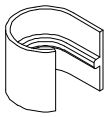	**Top Hinge Cap (Frame)** ***Used up to 10/97***	WH BN	NA
Frame 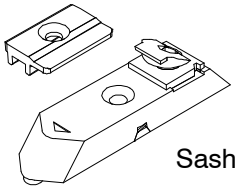 Sash	**Round Top Tilt–Turn Safety Device** R609A20 *Includes:* *1 – Safety device* *2 – #6x1 1/2″ Phillips flathead wood screws*		NA
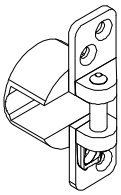	**Top Hinge Receiver (Frame)** ***Used up to 1/26/00*** M490B32 *Includes:* *1 – Top hinge receiver* *4 – #8x1 1/2″ Phillips flathead wood screws*		10815156
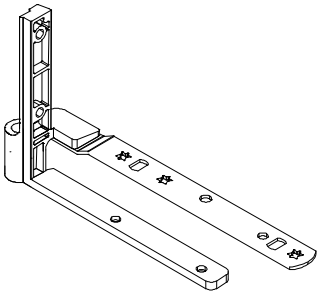	**Bottom Hinge (Sash)** ***Used up to 1/26/00*** R600C61R R600C61L *Includes:* *1 – Bottom hinge* *3 – #6x1 1/2″ Phillips flathead wood screws* *4 – #8x1 1/2″ Phillips flathead wood screws*	LH RH	10815215 10815217
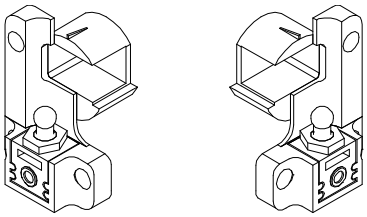 Right Hand Left Hand	**Bottom Hinge Receiver (Frame)** ***Used up to 1/26/00*** R600B62R R600B62L *Includes:* *1 – Bottom hinge receiver* *3 – #8x1 1/2″ Phillips flathead wood screws*	LH RH	NA 10815218
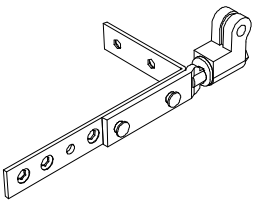	**Top Hinge (Sash)** ***Used up to 1/26/00*** M490B31 *Includes:* *1 – Top hinge* *5 – #6x1 1/2″ Phillips flathead wood screws*		10815155

OBSOLETE MISCELLANEOUS PARTS

Obsolete parts are subject to availability.

NOTE: *Always determine handing of parts with Marvin standard, as viewed from the exterior (Hinged side). Vendor numbers provided view handing from interior.* ***DO NOT SPECIFY USING VENDOR METHOD.***

ILLUSTRATION *NOT TO SCALE*	DESCRIPTION	OPER./ COLOR	PART NO.
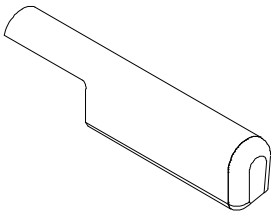	**Vertical Bottom Hinge Cap (Sash)** ***Used up to 1/26/00***	LH WH RH WH LH BN RH BN	10815331 10815330 10815337 10815336
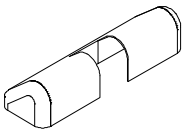	**Top Hinge Cap (Frame)** ***Used from 10/97 – 1/26/00*** Overall width 2 3/8″ (60)	WH BN	NA 10815318
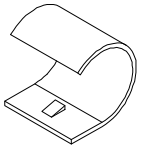	**Top Hinge Cap (Frame)** ***Used from 10/97 – 1/26/00***	WH BN	10815317 NA
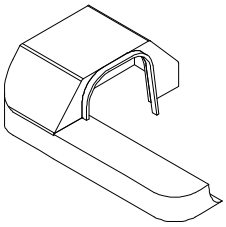	**Bottom Hinge Cap (Frame)** ***Used up to 1/26/00***	LH WH RH WH LH BN RH BN	N/A 10815334 10815341 10815340
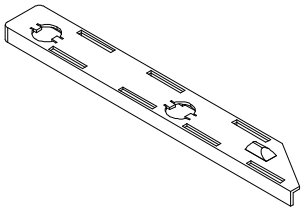	**Horizontal Bottom Hinge Cap (Sash))** ***Used up to 1/26/00***	LH WH RH WH LH BN RH BN	10815333 10815332 10815339 10815338
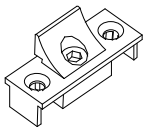	**Snubber (Sash), Inswing Casement** ***Used from 10/97 – 9/00*** M490A35 Hopper		NA
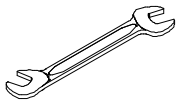	**Adjustment Wrench** 13mm		NA

OBSOLETE MISCELLANEOUS PARTS

Obsolete parts are subject to availability.

NOTE: *Always determine handing of parts with Marvin standard, as viewed from the exterior (Hinged side). Vendor numbers provided view handing from interior.* ***DO NOT SPECIFY USING VENDOR METHOD.***

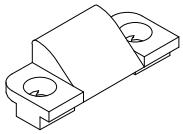	**Snubber (Frame), Inswing Casement** ***Used from 10/97 – 9/00*** M490A36 Hopper		NA
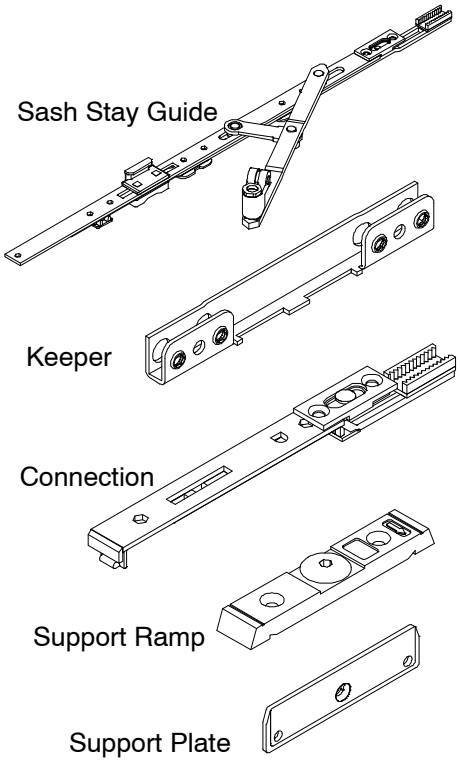	**Round Top Tilt-Turn Hardware** R608A08 *Includes:* *1 – Sash stay guide* *1 – Keeper* *1 – Connection* *1 – Support ramp* *1 – Support plate* *13 – #6x1 1/2" Phillips flathead wood screws* *(sash stay guide and connection)* *2 – #8x1 1/2" Phillips flathead wood screws* *(support ramp)* NOTE: Individual parts not available as separate items.		10815166 Check availability
	Top Hinge, Complete (Frame) Sash OM width Measured from the interior *25 1/2″ or less* *25 17/32″ – 33 3/8″* *33 13/32″ – 49 1/8″* *49 5/32″ – 64 7/8″* *Attached with #8x 1 1/2″ Phillips flathead wood screws*	 F507B10 F507B20 X516B30 F507B40	Check availability 10815078 10815079 10815080 10815081

OBSOLETE MISCELLANEOUS PARTS

Obsolete parts are subject to availability.

NOTE: *Since the vendor determines handing from the interior, some parts may be stamped with an "L" or "R."* ***For Marvin handing identification****, an "L" will mean right hand and an "R" will mean left hand. DO NOT SPECIFY USING VENDOR METHOD.*

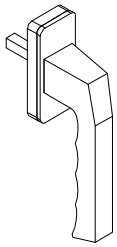	**Pistol Grip Handle** *Includes:* *1 – Pistol grip handle* *1 – Installation package with #5x35mm machine screws* NOTE: Handle style may vary depending on current stock.	GD	NA
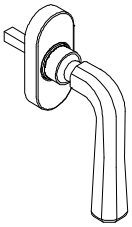	**Designer Handle** *Includes:* *1 – Designer handle* *1 – Installation package with #5x35mm machine screws* NOTE: Handle style may vary depending on current stock.	BS	NA
	4 mm Allen Wrench		10815231

OBSOLETE SASH REPLACEMENT

ORDERING REPLACEMENT OPERATOR OR STATIONARY SASH FOR TILT-TURN, HOPPER AND INSWING CASEMENT

NOTE: *This information is for sash produced prior to 6/06/2006.*

To order replacement operating or stationary sash specify:

1. size (call number or OM of sash);
2. operation and handing;
3. glazing;
4. finish;
5. handle height (if other than standard);

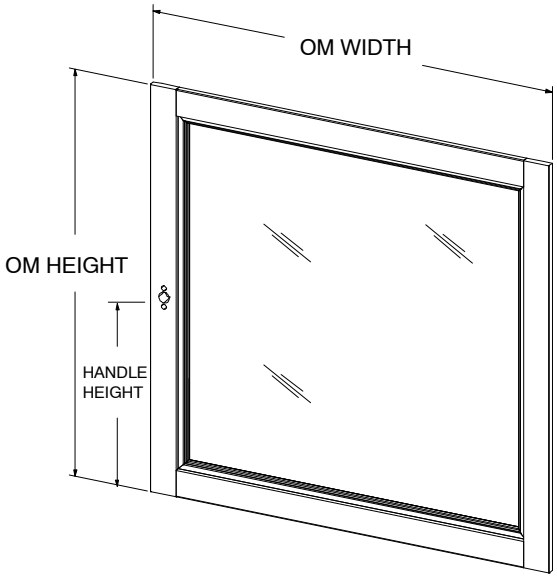

Interior View

Sash OM Height Measure from the Interior			Handle Height
25 3/32″	or less		7 7/16″
25 1/8″	–	32 31/32″	11 1/8″
33″	–	40 27/32″	16 15/16″
40 7/8″	–	48 23/32″	20 15/16″
48 3/4″	–	56 19/32″	22 15/16″
56 5/8″	–	64 15/32″	22 15/16″
64 1/2″	–	72 11/32″	22 15/16″
72 3/8″	–	80 7/32″	44 9/16″
80 1/4″	–	88 3/32″	44 9/16″
88 1/8″	–	93 3/16″	44 9/16″

Note: Handle height is measured from the bottom of the sash to the center of the espagnolette mechanism.