CHAPTER 4

BOWS AND BAYS

Table of Contents

	PAGE
History	**4.3**
Ultimate Casement Bow and Bay **Part Identification – Clad**	
Clad Ultimate Casement Bow or Bay	4.12
Clad Ultimate Casement 45° Bay	4.13
Clad Ultimate Casement 90° Bay	4.14
Clad Ultimate Casement Bow	4.15
Clad Ultimate Push Out Casement Bow or Bay	4.16
Clad Ultimate Push Out Casement 45° Bay	4.17
Clad Ultimate Push Out Casement 90° Bay	4.18
Clad Ultimate Push Out Casement Bow	4.19
Part Identification – Wood	
Wood Ultimate Casement Bow or Bay	4.20
Wood Ultimate Casement 45° Bay	4.21
Wood Ultimate Casement 90° Bay	4.22
Wood Ultimate Casement Bow	4.23
Wood Ultimate Push Out Casement Bow or Bay	4.24
Wood Ultimate Push Out Casement 45° Bay	4.25
Wood Ultimate Push Out Casement 90° Bay	4.26
Wood Ultimate Push Out Casement Bow	4.27
Casemaster Bow and Bay **Part Identification – Clad**	
Clad Casemaster Bow or Bay	4.8
Clad Casemaster 45° Bay	4.9
Clad Casemaster 90° Bay	4.10
Clad Casemaster Bow	4.11
Part Identification – Wood	
Wood Casemaster Bow or Bay	4.4
Wood Casemaster 45° Bay	4.5
Wood Casemaster 90° Bay	4.6
Wood Casemaster Bow	4.7

PAGE

Ultimate Double Hung Bay
Part Identification – Head Jamb and Sill Details
Clad Ultimate Double Hung Bay 4.30
Wood Ultimate Double Hung Bay 4.28
Part Identification – Jamb Details
Clad Ultimate Double Hung Bay 4.31
Wood Ultimate Double Hung Bay 4.29
Wood 90° Bent Glass Triangle Bay 4.32
Replacement Parts 4.33
Obsolete
Obsolete Sun Bay Information 4.37

ATTENTION:

- Specification and technical data are subject to change without notice.
- Numbers listed in parentheses ( ) are metric equivalents in millimeters rounded to the nearest whole number.

HISTORY

PRODUCED	UNIT TYPE	FEATURES OR CHANGES	STATUS
1962	Casement Bows	Introduced 4, 5 and 6 wide bow units with head and seat board.	1979
1971	Wood Double Hung Bays	Introduced 30 and 45 degree bay units with head and seat board.	Present
1974	Wood Casemaster Bows and Bay	Introduced 45 degree bay and 5 wide bow units with head and seat board.	Present
1976	Wood Casemaster Bow	Added 4 and 6 wide bow units.	Present
1978	Clad Casemaster Bows and Bay	Introduced 45 degree bay and 4, 5 and 6 wide bow units with head and seat board.	Present
1979	Clad Double Hung Bay	Introduced 45 degree bay unit with head and seat board.	Present
1981	Wood Casemaster and Double Hung Bays	Introduced 60 degree bay units with head and seat board.	Present
1982	Wood Casemaster Bays	Introduced 30 and 90 degree bay units with head and seat board. The 90 degree bay features 1 7/8″ top and side flat casing.	Present
1983	Clad Double Hung and Clad Casemaster Bays	Introduced 30 degree bay units with head and seat board.	Present
1983	Sun Bays	Unit featured a 90 degree bay configuration with polygon shaped operating flankers, 1″ direct glazed center section and a 1″ direct glazed sloped top. Unit was complete with seat board, lever operators, cam locks, butt hinges, 3″ top flat casing and 1 1/2″ side flat casing.	1994
1987	Clad Casemaster Bay	Introduced 90° bay units with head and seat board.	Present
1991	Wood 90 Degree Bent Glass Triangle Bay	Unit features 1″ direct glazed bent glass, clear brick mould casing and clear sill. Head and seat board included.	1999
1992	Sun Bays	Weather strip upgraded.	1994
2003	Wood and Clad Casemaster Bow & Bay	3/31/03 Satin Taupe (TP) hardware replaces bronze as standard. New interior stops, Satin Taupe aluminum screens, optional wood surround screens are available. New screen location and fastening system. New one–piece clad sash extrusion.	Present
	Wood and Clad Ultimate Double Hung	3/31/03 Satin Taupe (TP) hardware replaces bronze as standard.	Present
	Wood and Clad Casemaster Bow & Bay	4/14/03 Newly designed Satin Taupe (TP) folding handle is standard.	Present
2004	Wood and Clad Bow & Bay	1/2004 Added Oil Rubbed Bronze and Satin Chrome to available hardware finishes	Present
2005	Wood and Clad Bow & Bay	2/2005 Added cable support system	Present
2008	Clad Bow & Bay	7/28/2008 Added Clad Ultimate Casement. Mixed grain Douglas fir is now a standard option.	Present
2009	Wood & Clad Bow & Bay	1/26/2009 Added Wood Ultimate Casement, and wood and clad Ultimate Push out.	Present
2009	All	3/23/2009 Added LoĒ^3-366™ as a standard option for all products. Added Cedro Macho as a standard option for all clad products.	Present
2011	All	04/25/2011 Added LoĒ-180™ as a standard option for all products. White painted interior finish option introduced for all products	Present
2012	All	12–17–2012 Clear interior finish option introduced for all products.	Present

PART IDENTIFICATION

WOOD CASEMASTER BOW OR BAY

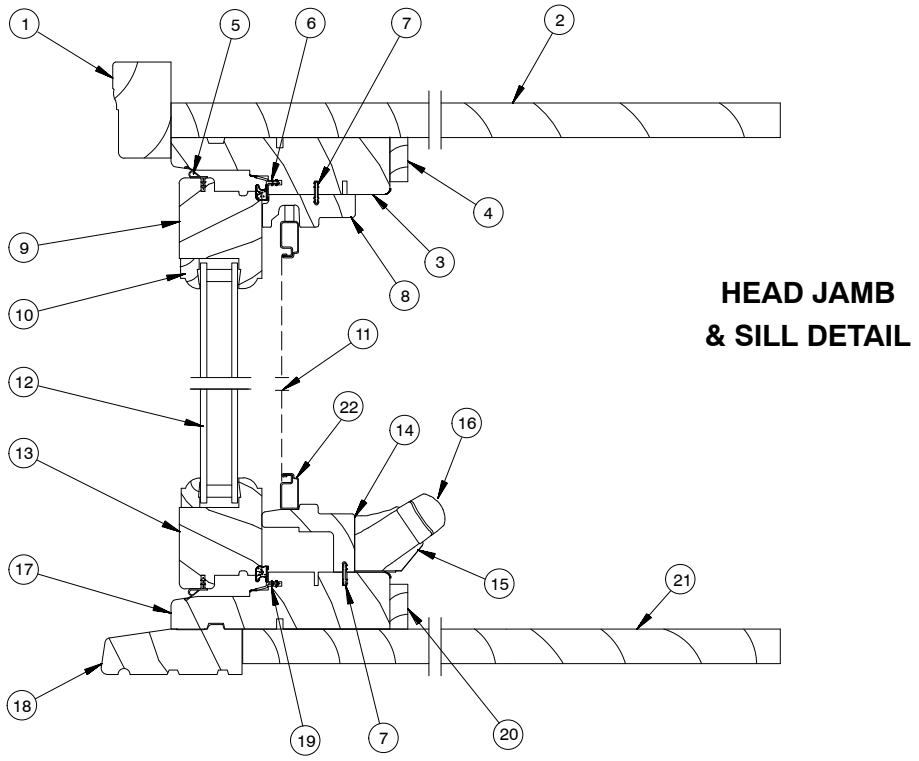

NOTE: Not to scale; specifications subject to change without notice.

1. Top Brick Mould Casing
2. Head Board
3. Head Jamb
4. Top Interior Trim
5. Sash Weather Strip
6. Head Jamb Weather Strip
7. Connecting Barb
8. Head Jamb Stop
9. Top Rail
10. Glazing Bead
11. Screen Mesh
12. Insulated Glass
13. Bottom Rail
14. Hardware Cover
15. Folding Crank Cover
16. Folding Crank Handle
17. Sill
18. Subsill
19. Sill Weather Strip
20. Bottom Interior Trim
21. Seat Board
22. Screen Frame

PART IDENTIFICATION

WOOD CASEMASTER BAY

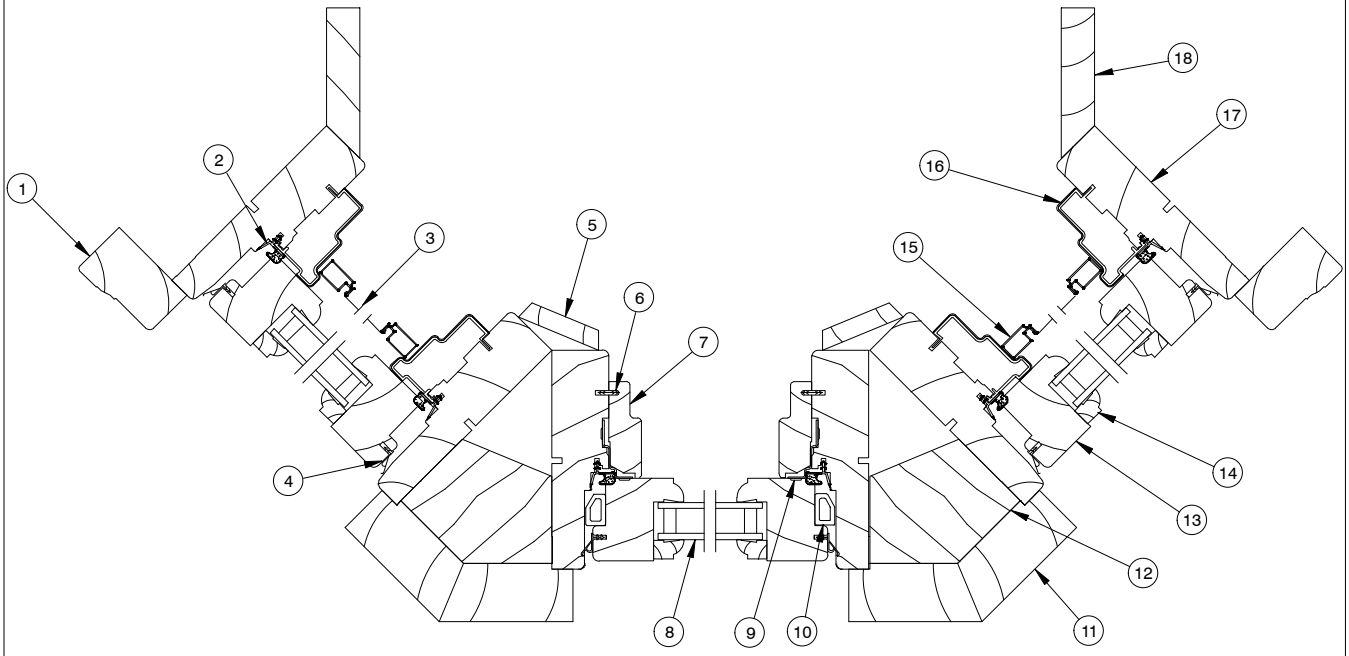

JAMB DETAIL

NOTE: Not to scale; specifications subject to change without notice.

1. Side Brick Mould Casing
2. Frame Weather Strip
3. Screen Mesh
4. Sash Weather Strip
5. Interior Mull Trim
6. Connecting Barb
7. Stationary Side Stop
8. Insulated Glass
9. Stationary Jamb Bracket
10. Stationary Sash Blocks
11. Exterior Mull Casing
12. Mull Block
13. Stile
14. Glazing Bead
15. Screen Frame
16. Side Stop
17. Jamb
18. Return Jamb

PART IDENTIFICATION

WOOD CASEMASTER 90° BAY

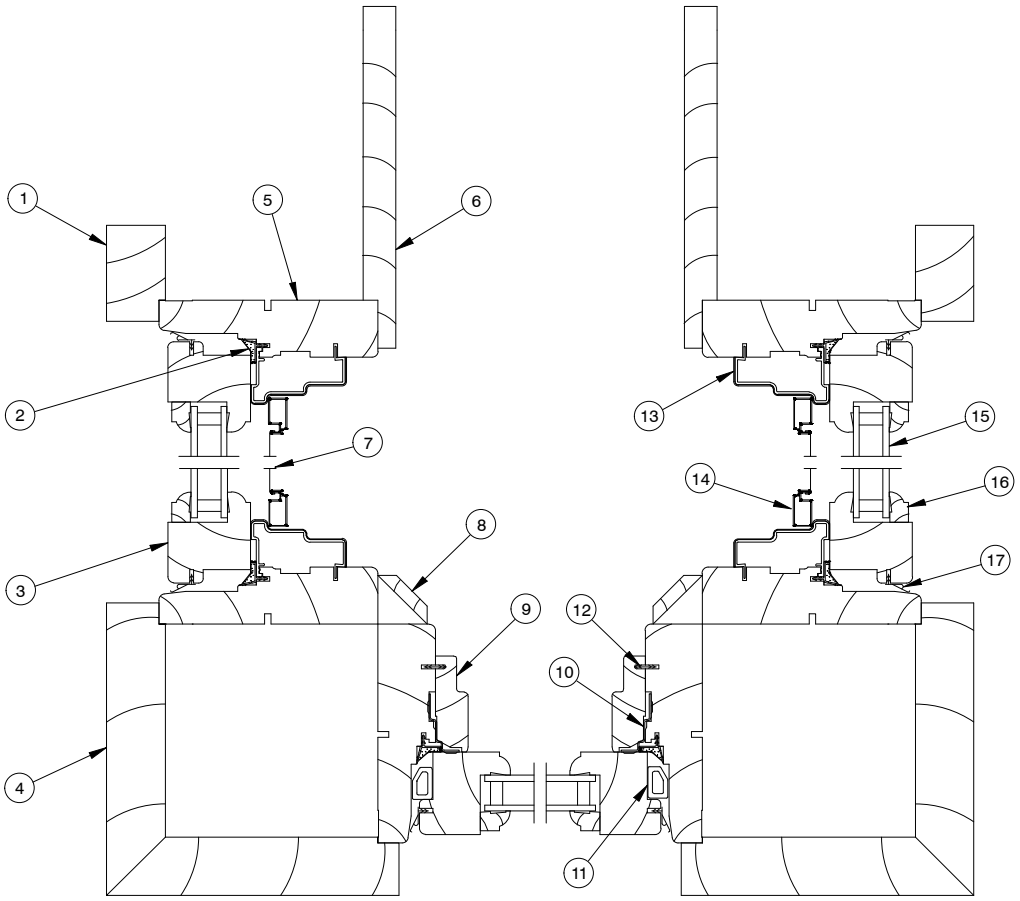

JAMB DETAIL

NOTE: Not to scale; specifications subject to change without notice.

1. Side Flat Casing
2. Frame Weather Strip
3. Stile
4. Exterior Mull Casing
5. Jamb
6. Return Jamb
7. Screen Mesh
8. Interior Mull Trim
9. Stationary Side Stop
10. Stationary Jamb Bracket
11. Stationary Sash Block
12. Connecting Barb
13. Side Stop
14. Screen Frame
15. Insulated Glass
16. Glazing Bead
17. Sash Weather Strip

PART IDENTIFICATION

WOOD CASEMASTER BOW

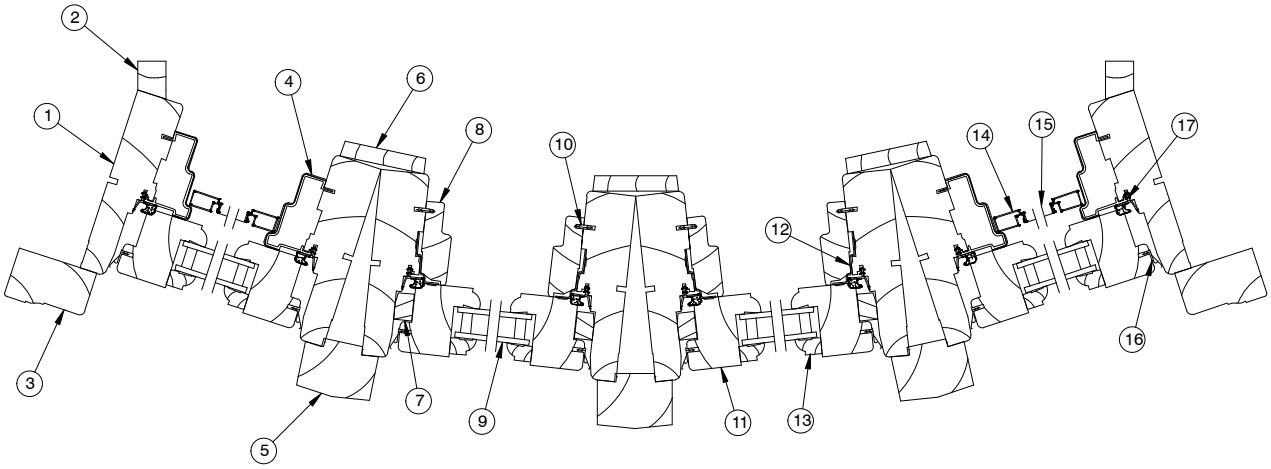

JAMB DETAIL

NOTE: Not to scale; specifications subject to change without notice.

1. Jamb
2. Return Jamb
3. Side Brick Mould Casing
4. Side Stop
5. Exterior Mull Casing
6. Interior Mull Trim
7. Stationary Sash Block
8. Stationary Side Stop
9. Insulated Glass
10. Connecting Barb
11. Stile
12. Stationary Sash Bracket
13. Glazing Bead
14. Screen Frame
15. Screen Mesh
16. Sash Weather Strip
17. Frame Weather Strip

PART IDENTIFICATION

CLAD CASEMASTER BOW OR BAY

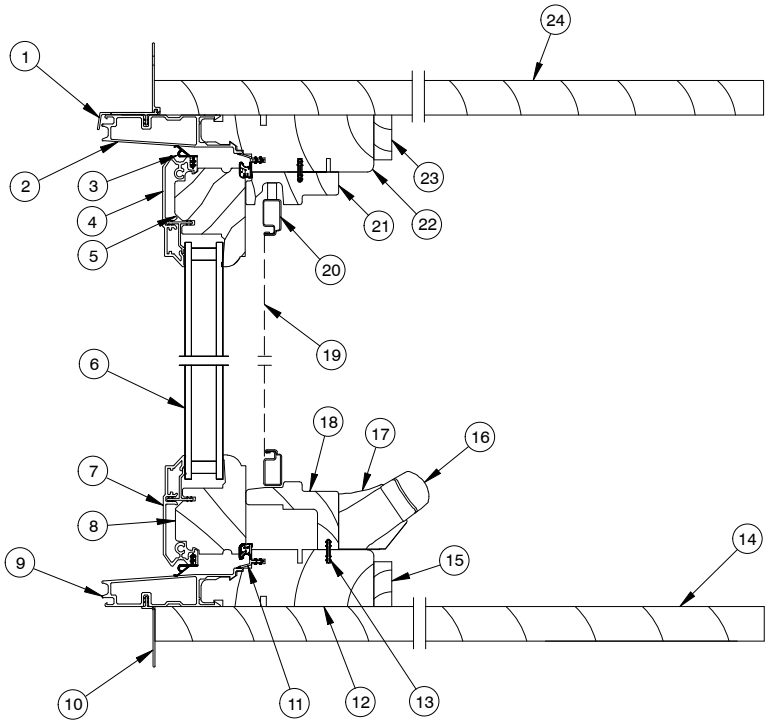

HEAD JAMB
& SILL DETAIL

NOTE: Not to scale; specifications subject to change without notice.

1. Head Jamb Nailing Fin/Drip Cap
2. Head Jamb Cladding
3. Sash Weather Strip
4. Top Rail Cladding
5. Top Rail
6. Insulated Glass
7. Bottom Rail Cladding
8. Bottom Rail
9. Sill Cladding
10. Sill Nailing Fin
11. Frame Weather Strip
12. Sill
13. Connecting Barb
14. Seat Board
15. Bottom Interior Trim
16. Folding Crank Handle
17. Folding Crank Cover
18. Hardware Cover
19. Screen Mesh
20. Screen Frame
21. Head Jamb Stop
22. Head Jamb
23. Top Interior Trim
24. Head Board

PART IDENTIFICATION

CLAD CASEMASTER BAY

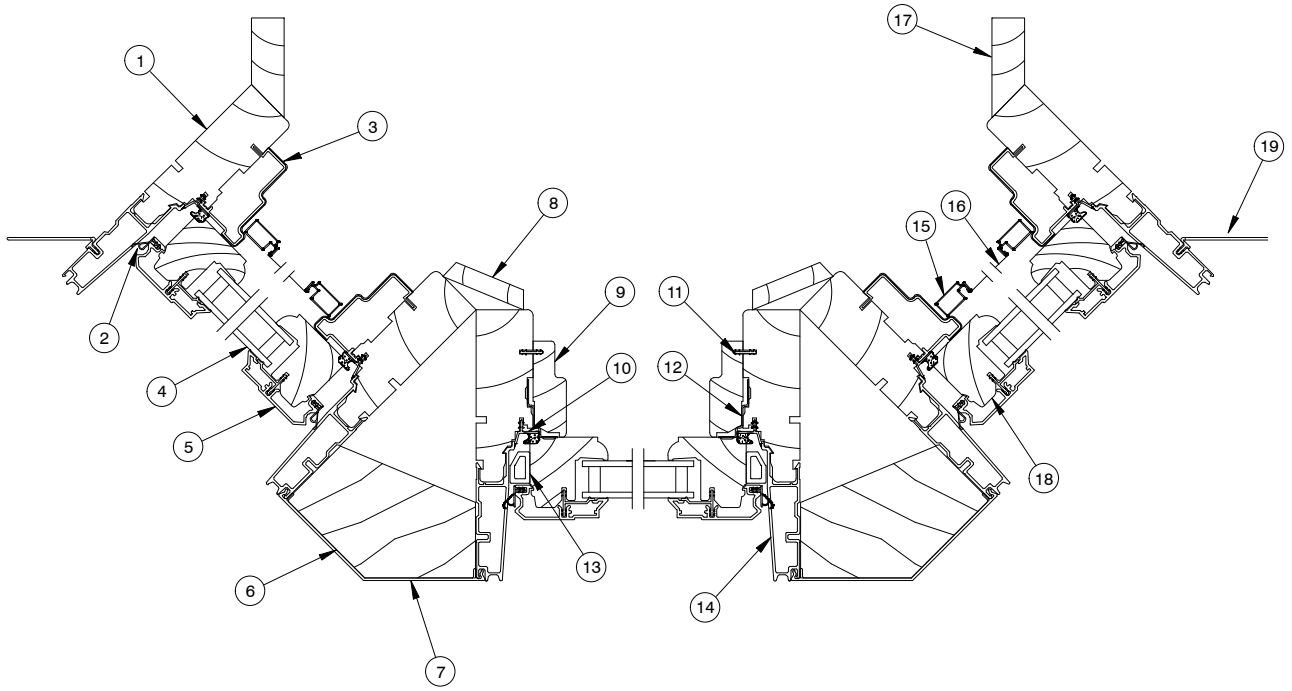

HEAD JAMB
& SILL DETAIL

NOTE: Not to scale; specifications subject to change without notice.

1. Jamb
2. Sash Weather Strip
3. Side Stop
4. Insulated Glass
5. Stile Cladding
6. Mull Block
7. Mull Cap
8. Interior Mull Trim
9. Stationary Side Stop
10. Frame Weather Strip
11. Connecting Barb
12. Stationary Jamb Bracket
13. Stationary Sash Block
14. Jamb Cladding
15. Screen Frame
16. Screen Mesh
17. Return Jamb
18. Stile
19. Jamb Nailing Fin

PART IDENTIFICATION

CLAD CASEMASTER 90° BAY

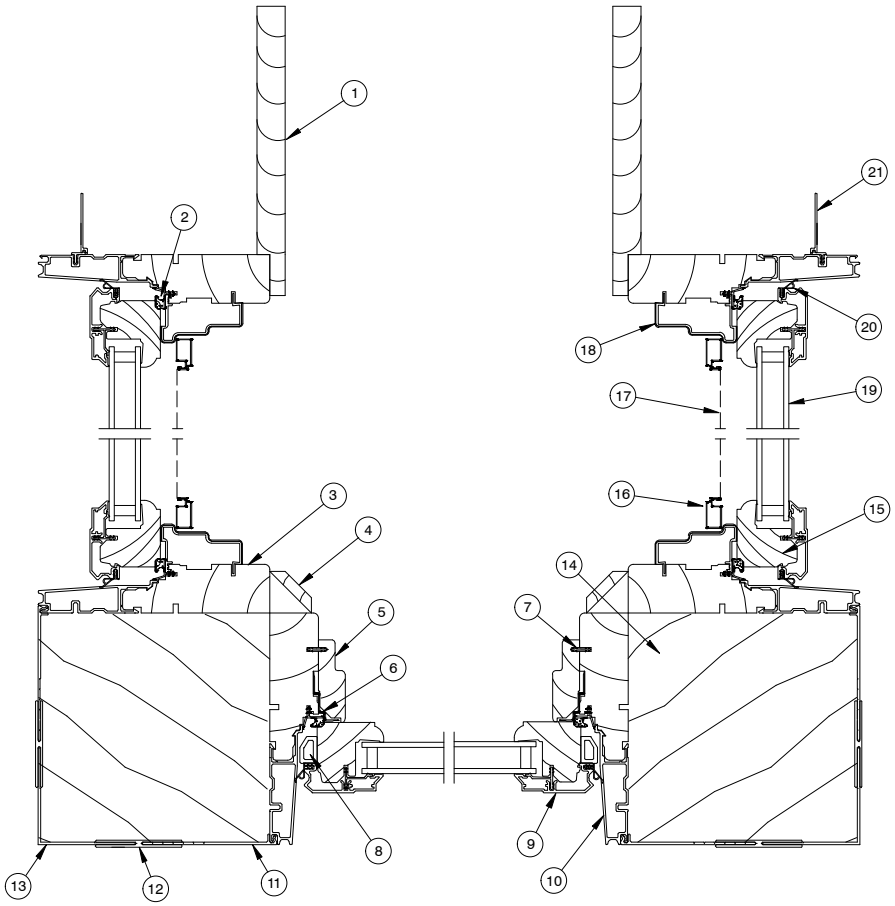

HEAD JAMB
& SILL DETAIL

NOTE: Not to scale; specifications subject to change without notice.

1. Return Jamb
2. Frame Weather Strip
3. Jamb
4. Interior Mull Trim
5. Stationary Side Stop
6. Stationary Sash Bracket
7. Connecting Barb
8. Stationary Sash Block
9. Stile Cladding
10. Jamb Cladding
11. Clad Frame Expander
12. Clad Mull Expander
13. 90 Degree Bay Corner Cover
14. Mull Block
15. Stile
16. Screen Frame
17. Screen Mesh
18. Side Stop
19. Insulated Glass
20. Sash Weather Strip
21. Jamb Nailing Fin

PART IDENTIFICATION

CLAD CASEMASTER BOW

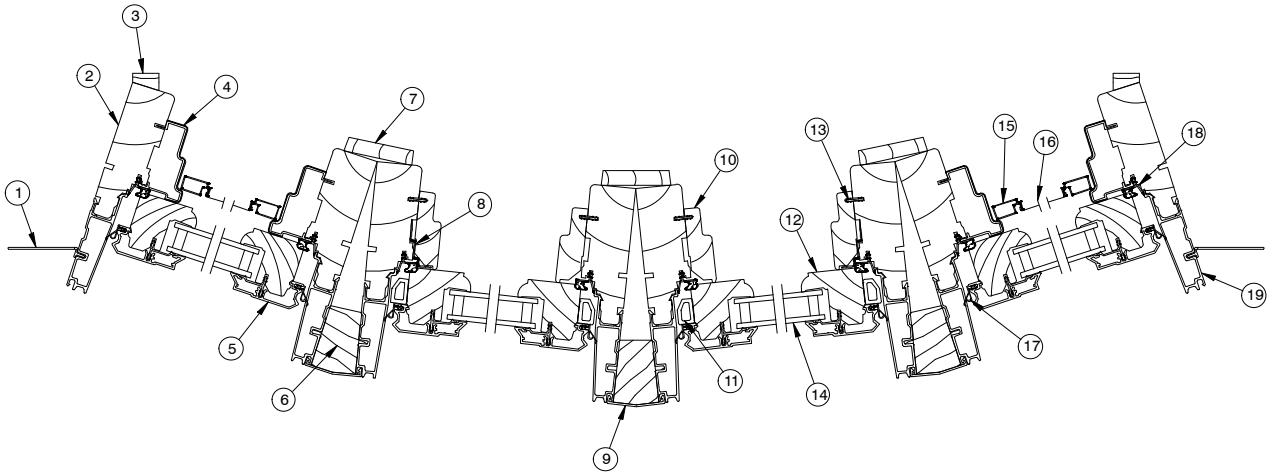

JAMB DETAIL

NOTE: Not to scale; specifications subject to change without notice.

1. Jamb Nailing Fin
2. Jamb
3. Return Jamb
4. Side Stop
5. Stile Cladding
6. Mull Block
7. Interior Mull Trim
8. Stationary Sash Bracket
9. Clad Mull Cap
10. Side Stop
11. Stationary Sash Block
12. Stile
13. Connecting Barb
14. Insulated Glass
15. Screen Frame
16. Screen Mesh
17. Sash Weather Strip
18. Frame Weather Strip
19. Jamb Cladding

PART IDENTIFICATION

CLAD ULTIMATE CASEMENT BOW OR BAY

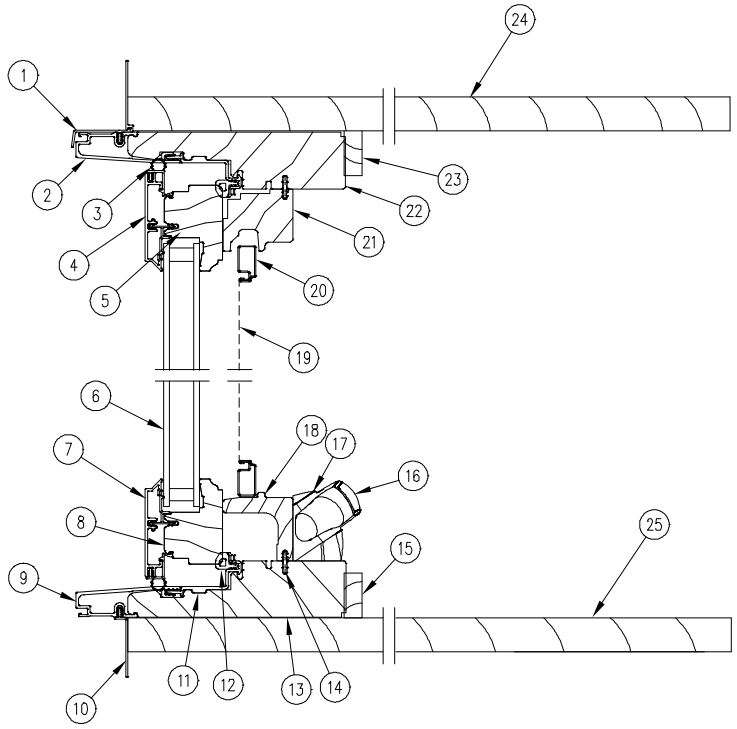

HEAD JAMB
& SILL DETAIL

NOTE: Not to scale; specifications subject to change without notice.

1. Head Jamb Nailing Fin/Drip Cap
2. Head Jamb Cladding
3. Sash Weather Strip
4. Top Rail Cladding
5. Top Rail
6. Insulated Glass
7. Bottom Rail Cladding
8. Bottom Rail
9. Sill Cladding
10. Sill Nailing Fin
11. Frame Thermal Break
12. Frame Weather Strip
13. Sill
14. Connecting Barb
15. Bottom Interior Trim
16. Folding Crank Handle
17. Folding Crank Cover
18. Hardware Cover
19. Screen Mesh
20. Screen Frame
21. Head Jamb Stop
22. Head Jamb
23. Top Interior Trim
24. Head Board
25. Seat Board

PART IDENTIFICATION

CLAD ULTIMATE CASEMENT 45° BAY

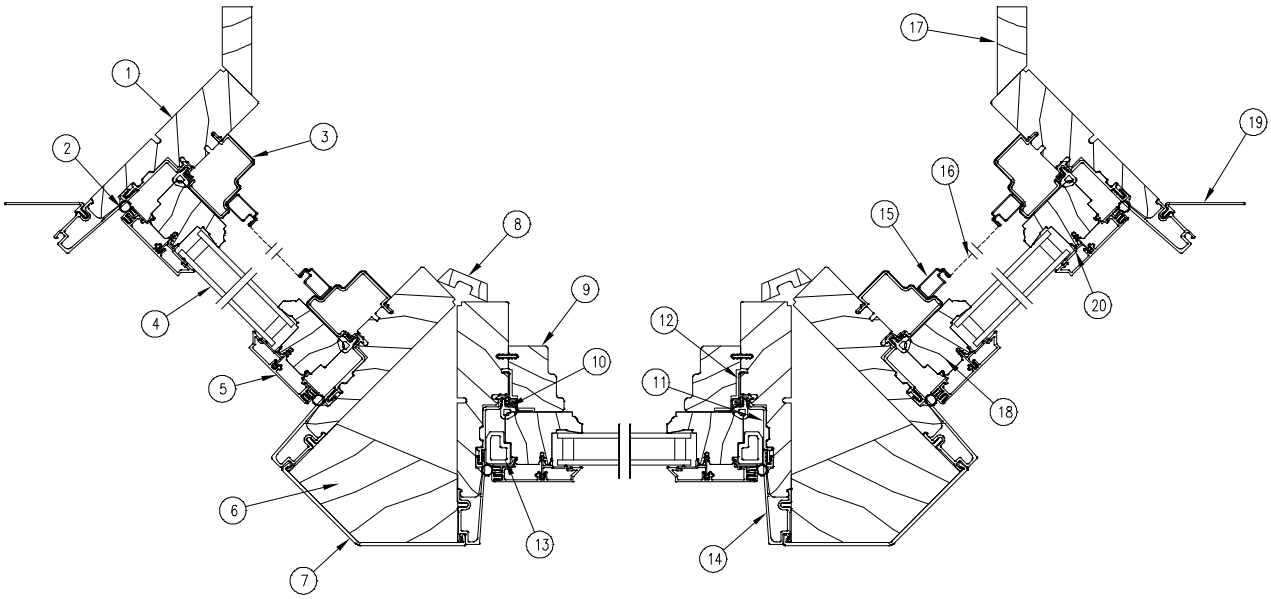

JAMB DETAIL

NOTE: Not to scale; specifications subject to change without notice.

1. Jamb
2. Sash Weather Strip
3. Side Stop
4. Insulated Glass
5. Stile Cladding
6. Mull Block
7. Mull Cap
8. Interior Mull Trim
9. Stationary Side Stop
10. Frame Weather Strip
11. Thermal Break
12. Stationary Jamb Bracket
13. Stationary Sash Block
14. Jamb Cladding
15. Screen Frame
16. Screen Mesh
17. Return Jamb
18. Stile
19. Jamb Nailing Fin
20. Sash Glazing Bead

PART IDENTIFICATION

CLAD ULTIMATE CASEMENT 90° BAY

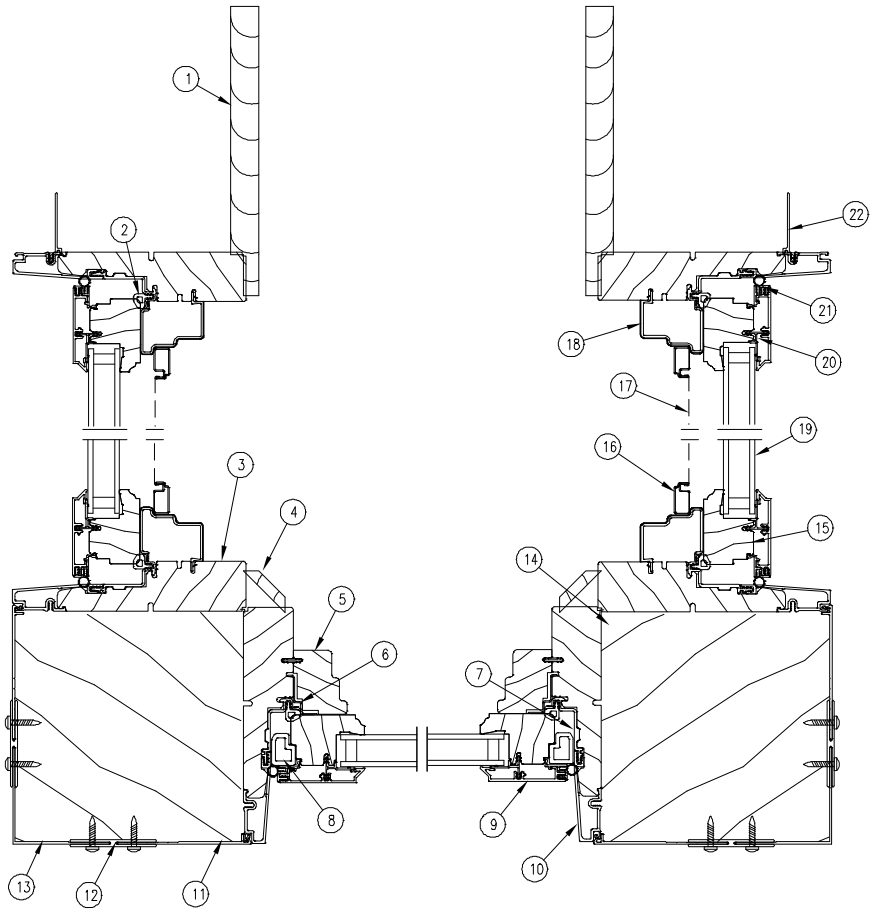

HEAD JAMB
& SILL DETAIL

NOTE: Not to scale; specifications subject to change without notice.

1. Return Jamb
2. Frame Weather Strip
3. Jamb
4. Interior Mull Trim
5. Stationary Side Stop
6. Stationary Sash Bracket
7. Frame Thermal Break
8. Stationary Sash Block
9. Stile Cladding
10. Jamb Cladding
11. Clad Frame Expander
12. Clad Mull Expander
13. 90 Degree Bay Corner Cover
14. Mull Block
15. Stile
16. Screen Frame
17. Screen Mesh
18. Side Stop
19. Insulated Glass
20. Sash Glazing Bead
21. Sash Weather Strip
22. Jamb Nailing Fin

PART IDENTIFICATION

CLAD ULTIMATE CASEMENT BOW

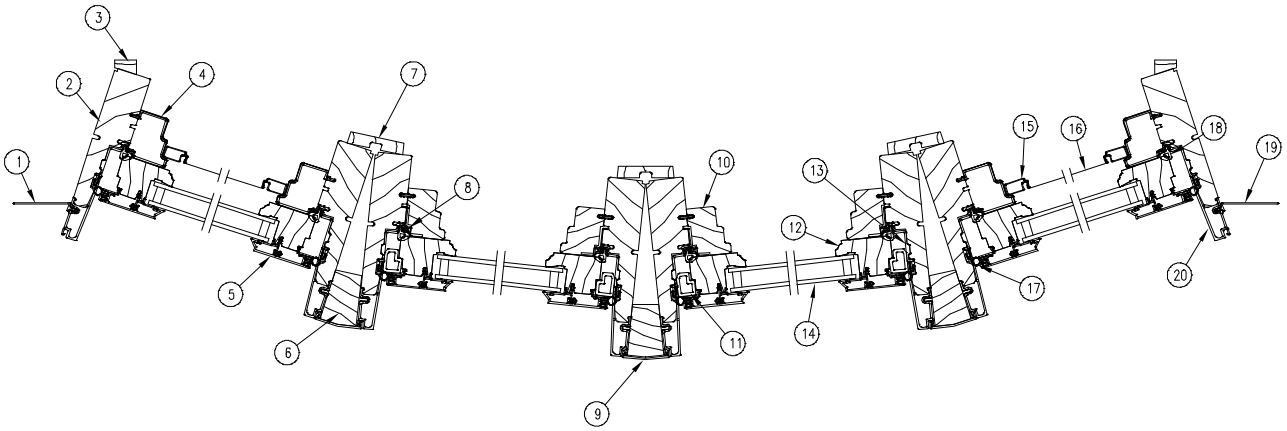

JAMB DETAIL

NOTE: Not to scale; specifications subject to change without notice.

1. Jamb Nailing Fin
2. Jamb
3. Return Jamb
4. Side Stop
5. Stile Cladding
6. Mull Block
7. Interior Mull Trim
8. Stationary Sash Bracket
9. Clad Mull Cap
10. Side Stop
11. Stationary Sash Block
12. Stile
13. Frame Thermal Break
14. Insulated Glass
15. Screen Frame
16. Screen Mesh
17. Sash Weather Strip
18. Frame Weather Strip
19. Jamb Nailing Fin
20. Jamb Cladding

PART IDENTIFICATION

CLAD ULTIMATE PUSH OUT CASEMENT BOW OR BAY

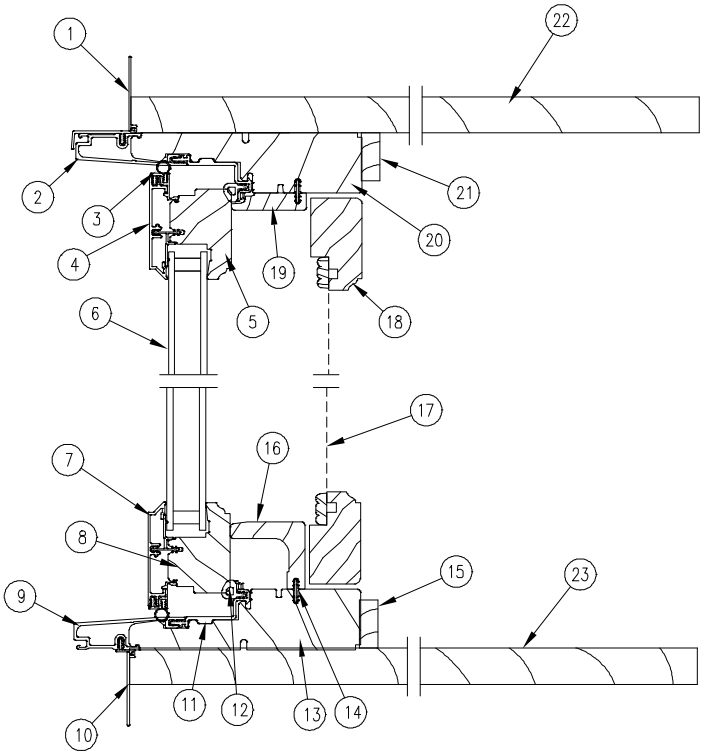

HEAD JAMB
& SILL DETAIL

NOTE: Not to scale; specifications subject to change without notice.

1. Head Jamb Nailing Fin/Drip Cap
2. Head Jamb Cladding
3. Sash Weather Strip
4. Top Rail Cladding
5. Top Rail
6. Insulated Glass
7. Bottom Rail Cladding
8. Bottom Rail
9. Sill Cladding
10. Sill Nailing Fin
11. Frame Thermal Break
12. Frame Weather Strip
13. Sill
14. Connecting Barb
15. Bottom Interior Trim
16. Sill Cover
17. Screen Mesh
18. Wood Screen Frame
19. Head Jamb Stop
20. Head Jamb
21. Top Interior Trim
22. Head Board
23. Seat Board

PART IDENTIFICATION

CLAD ULTIMATE PUSH OUT CASEMENT 45° BAY

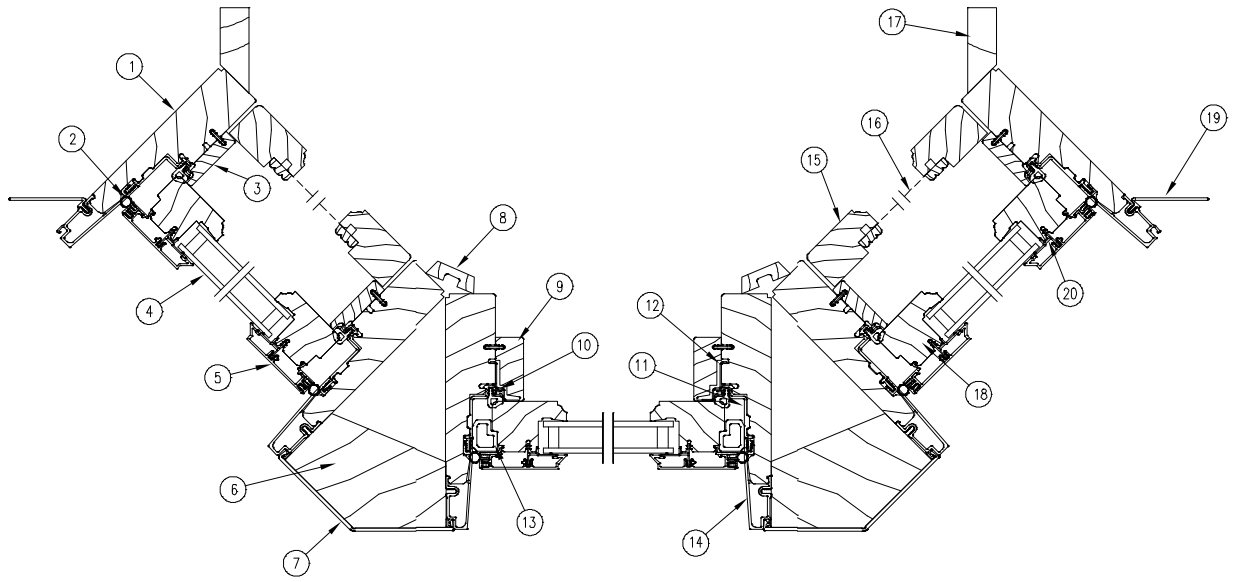

JAMB DETAIL

NOTE: Not to scale; specifications subject to change without notice.

1. Jamb
2. Sash Weather Strip
3. Side Stop
4. Insulated Glass
5. Stile Cladding
6. Mull Block
7. Mull Cap
8. Interior Mull Trim
9. Stationary Side Stop
10. Frame Weather Strip
11. Thermal Break
12. Stationary Jamb Bracket
13. Stationary Sash Block
14. Jamb Cladding
15. Screen Frame
16. Screen Mesh
17. Return Jamb
18. Stile
19. Jamb Nailing Fin
20. Sash Glazing Bead

PART IDENTIFICATION

CLAD ULTIMATE PUSH OUT CASEMENT 90° BAY

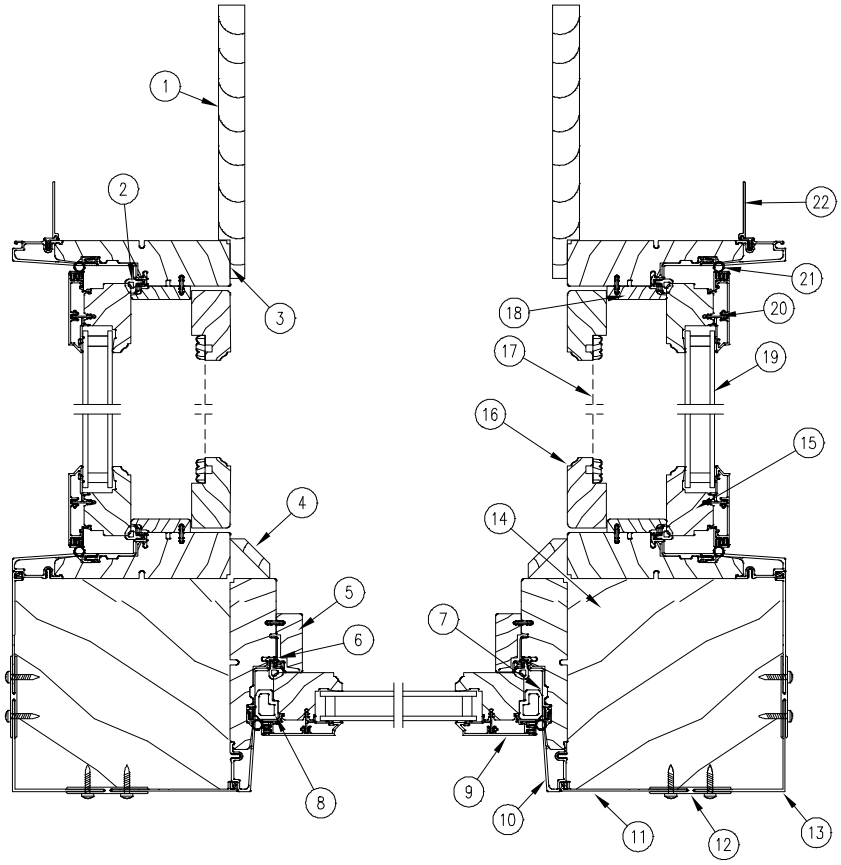

HEAD JAMB
& SILL DETAIL

NOTE: Not to scale; specifications subject to change without notice.

1. Return Jamb
2. Frame Weather Strip
3. Jamb
4. Interior Mull Trim
5. Stationary Side Stop
6. Stationary Sash Bracket
7. Frame Thermal Break
8. Stationary Sash Block
9. Stile Cladding
10. Jamb Cladding
11. Clad Frame Expander
12. Clad Mull Expander
13. 90 Degree Bay Corner Cover
14. Mull Block
15. Stile
16. Screen Frame
17. Screen Mesh
18. Jamb Stop
19. Insulated Glass
20. Sash Glazing Bead
21. Sash Weather Strip
22. Jamb Nailing Fin

PART IDENTIFICATION

CLAD ULTIMATE PUSH OUT CASEMENT BOW

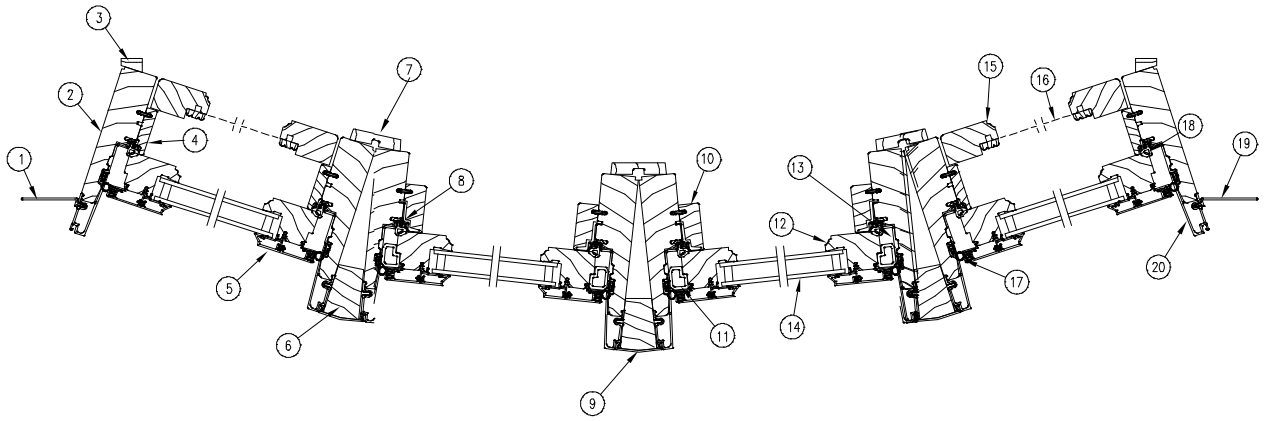

JAMB DETAIL

NOTE: Not to scale; specifications subject to change without notice.

1. Jamb Nailing Fin
2. Jamb
3. Return Jamb
4. Side Stop
5. Stile Cladding
6. Mull Block
7. Interior Mull Trim
8. Stationary Sash Bracket
9. Clad Mull Cap
10. Side Stop
11. Stationary Sash Block
12. Stile
13. Frame Thermal Break
14. Insulated Glass
15. Screen Frame
16. Screen Mesh
17. Sash Weather Strip
18. Frame Weather Strip
19. Jamb Nailing Fin
20. Jamb Cladding

PART IDENTIFICATION

WOOD ULTIMATE CASEMENT BOW OR BAY

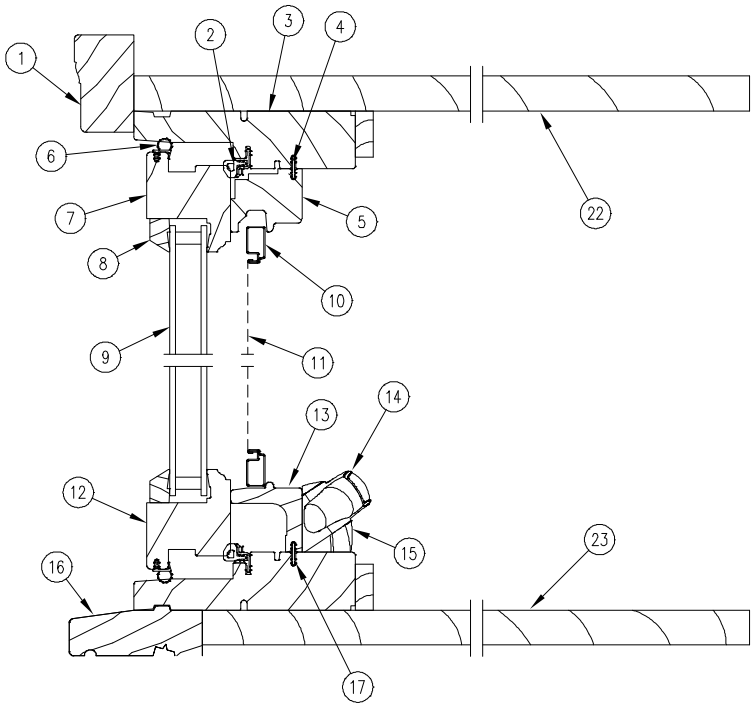

HEAD JAMB
& SILL DETAIL

NOTE: Not to scale; specifications subject to change without notice.

1. Head Jamb Brick Mould Casing
2. Frame Weather Strip
3. Head Jamb
4. Connecting Barb
5. Head Jamb Stop
6. Sash Weather Strip
7. Top Rail
8. Glazing Bead
9. Insulated Glass
10. Screen Frame
11. Screen Mesh
12. Bottom Rail
13. Hardware Cover
14. Folding Crank Handle
15. Folding Crank Cover
16. Subsill
17. Sill
18. Jamb Brick Mould Casing
19. Jamb
20. Jamb Stop
21. Stile
22. Headboard
23. Seatboard

PART IDENTIFICATION

WOOD ULTIMATE CASEMENT 45° BAY

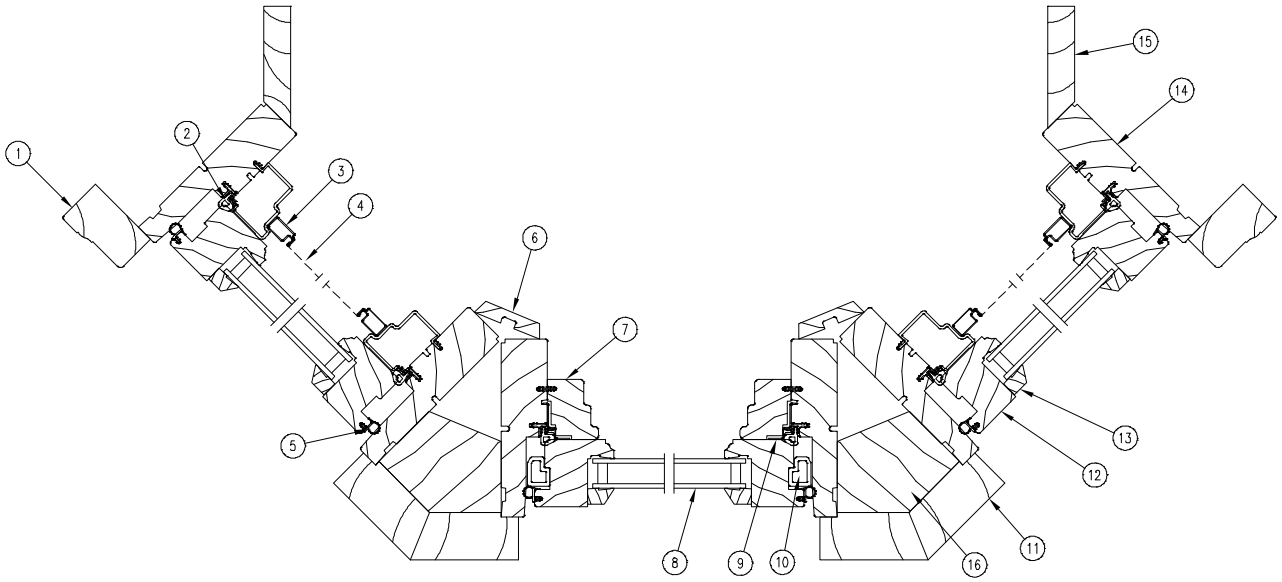

JAMB DETAIL

NOTE: Not to scale; specifications subject to change without notice.

1. Side Brick Mould Casing
2. Frame Weather Strip
3. Screen Frame
4. Screen Mesh
5. Sash Weather Strip
6. Interior Mull Trim
7. Side Stop
8. Insulated Glass
9. Stationary Jamb Bracket
10. Stationary Sash Blocks
11. Exterior Mull Casing
12. Stile
13. Glazing Bead
14. Jamb
15. Return Jamb
16. Mull Block

PART IDENTIFICATION

WOOD ULTIMATE CASEMENT 90° BAY

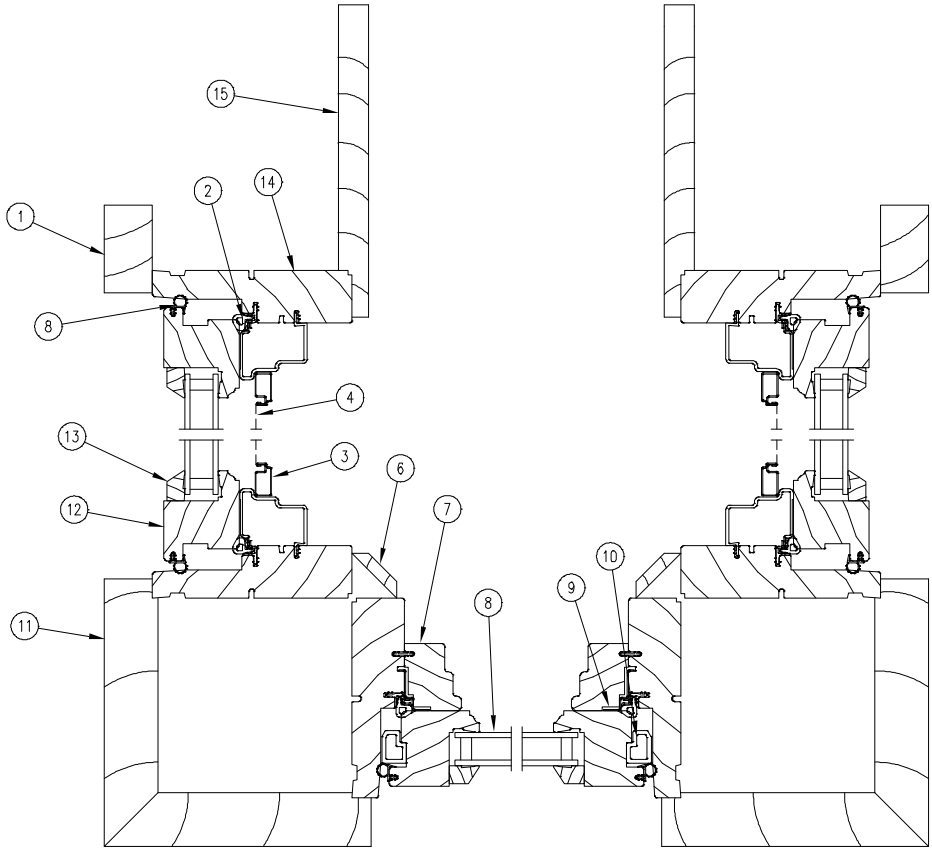

HEAD JAMB
& SILL DETAIL

NOTE: Not to scale; specifications subject to change without notice.

1. Side Flat Casing
2. Frame Weather Strip
3. Screen Frame
4. Screen Mesh
5. Sash Weather Strip
6. Interior Mull Trim
7. Side Stop
8. Insulated Glass
9. Stationary Jamb Bracket
10. Stationary Sash Blocks
11. Exterior Mull Casing
12. Stile
13. Glazing Bead
14. Jamb
15. Return Jamb

PART IDENTIFICATION

WOOD ULTIMATE CASEMENT BOW

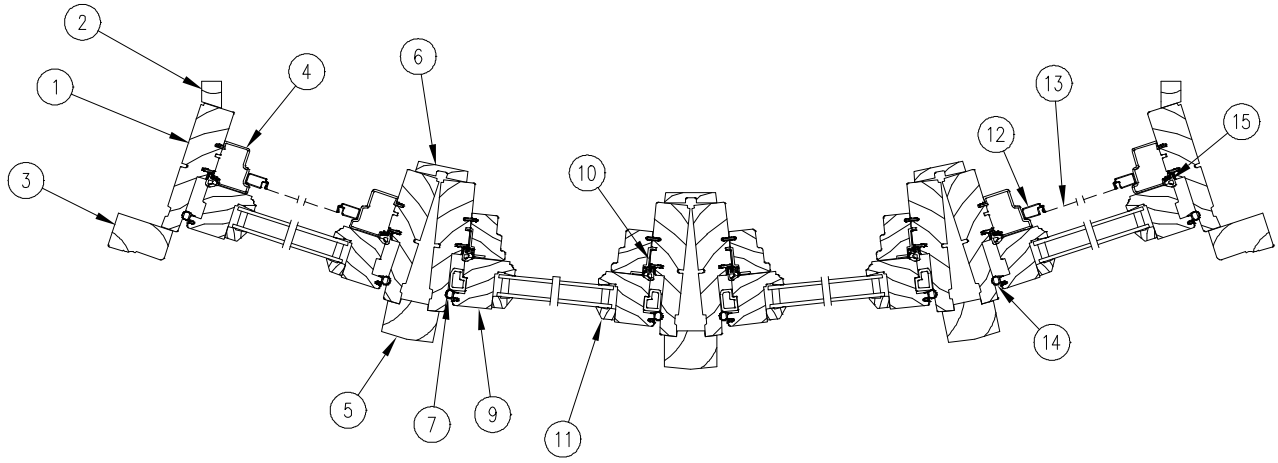

JAMB DETAIL

NOTE: Not to scale; specifications subject to change without notice.

1. Jamb
2. Return Jamb
3. Side Brick Mould Casing
4. Side Stop
5. Exterior Mull Casing
6. Interior Mull Trim
7. Stationary Sash Block
8. Insulated Glass
9. Stile
10. Stationary Sash Bracket
11. Glazing Bead
12. Screen Frame
13. Screen Mesh
14. Sash Weather Strip
15. Frame Weather Strip

PART IDENTIFICATION

WOOD ULTIMATE PUSH OUT CASEMENT BOW OR BAY

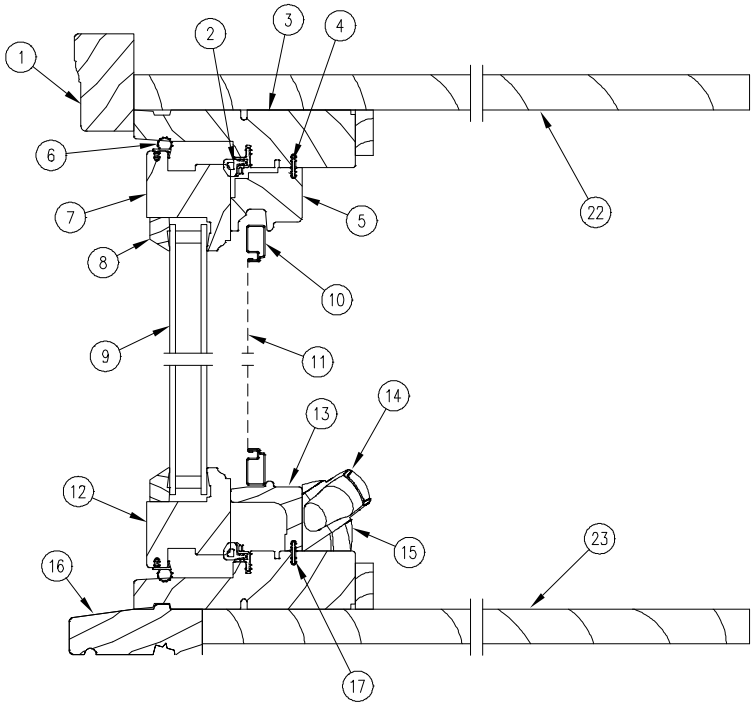

HEAD JAMB
& SILL DETAIL

NOTE: Not to scale; specifications subject to change without notice.

1. Head Jamb Brick Mould Casing
2. Frame Weather Strip
3. Head Jamb
4. Connecting Barb
5. Head Jamb Stop
6. Sash Weather Strip
7. Top Rail
8. Glazing Bead
9. Insulated Glass
10. Screen Frame
11. Screen Mesh
12. Bottom Rail
13. Hardware Cover
14. Folding Crank Handle
15. Folding Crank Cover
16. Subsill
17. Sill
18. Jamb Brick Mould Casing
19. Jamb
20. Jamb Stop
21. Stile
22. Headboard
23. Seatboard

PART IDENTIFICATION

WOOD ULTIMATE PUSH OUT CASEMENT 45° BAY

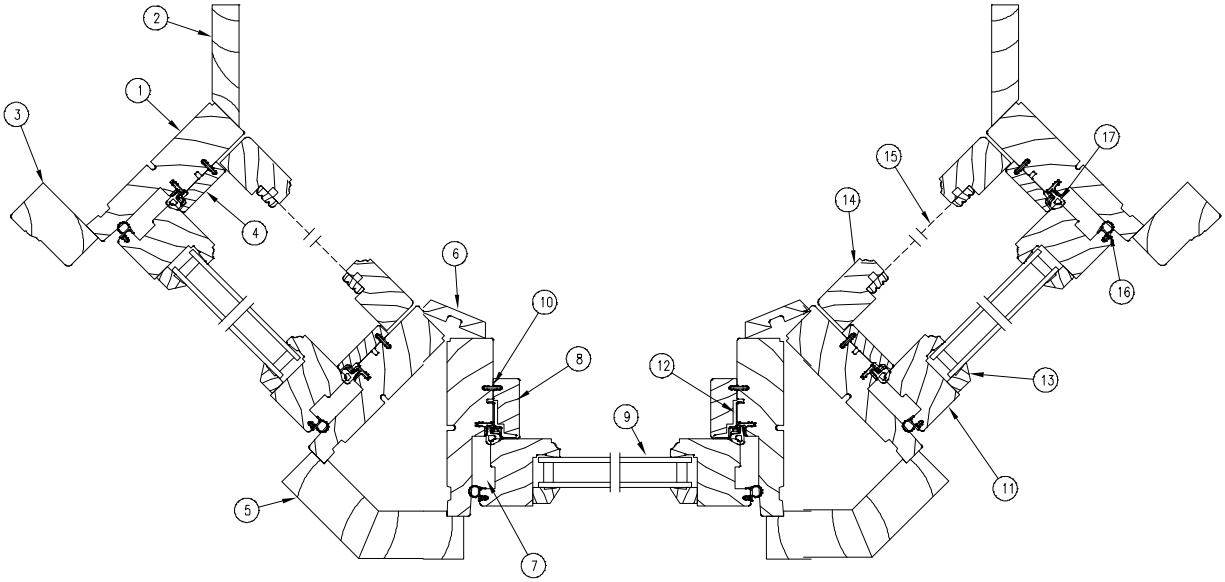

JAMB DETAIL

NOTE: Not to scale; specifications subject to change without notice.

1. Jamb
2. Return Jamb
3. Side Brick Mould Casing
4. Jamb Stop
5. Exterior Mull Casing
6. Interior Mull Trim
7. Stationary Sash Block
8. Stationary Side Stop
9. Insulated Glass
10. Connecting Barb
11. Stile
12. Stationary Sash Bracket
13. Glazing Bead
14. Wood Screen Frame
15. Screen Mesh
16. Sash Weather Strip
17. Frame Weather Strip

PART IDENTIFICATION

WOOD ULTIMATE PUSH OUT CASEMENT 90° BAY

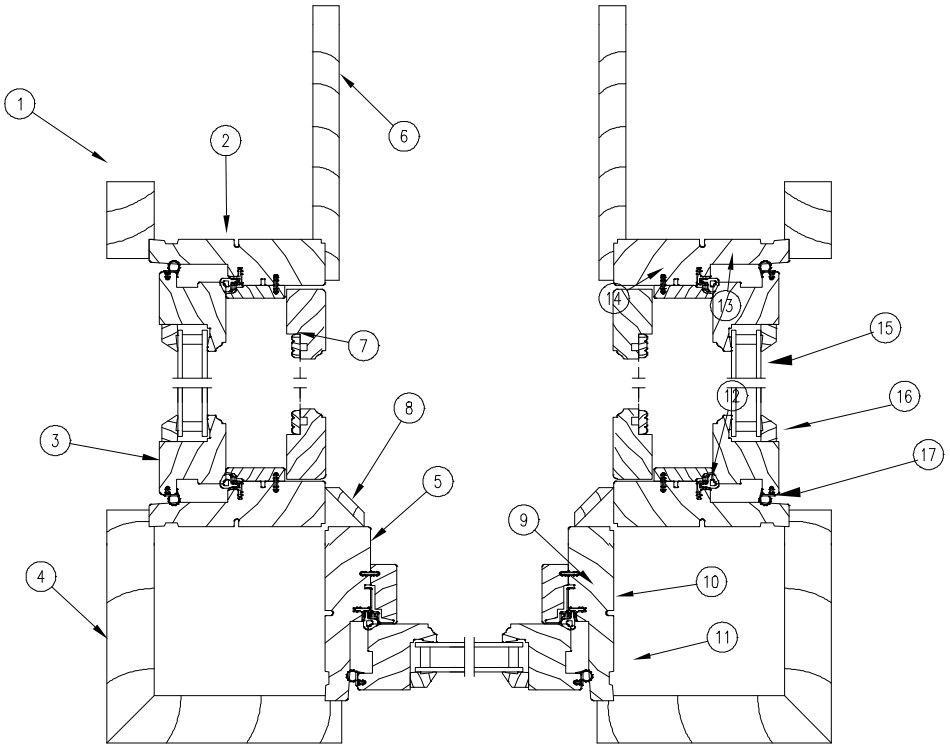

HEAD JAMB
& SILL DETAIL

NOTE: Not to scale; specifications subject to change without notice.

1. Side Flat Casing
2. Frame Weather Strip
3. Stile
4. Exterior Mull Casing
5. Jamb
6. Return Jamb
7. Screen Mesh
8. Interior Mull Trim
9. Stationary Side Stop
10. Stationary Jamb Bracket
11. Stationary Sash Bracket
12. Connecting Barb
13. Jamb Stop
14. Wood Screen Frame
15. Insulated Glass
16. Glazing Bead
17. Sash Weatherstrip

PART IDENTIFICATION

WOOD ULTIMATE PUSH OUT CASEMENT BOW

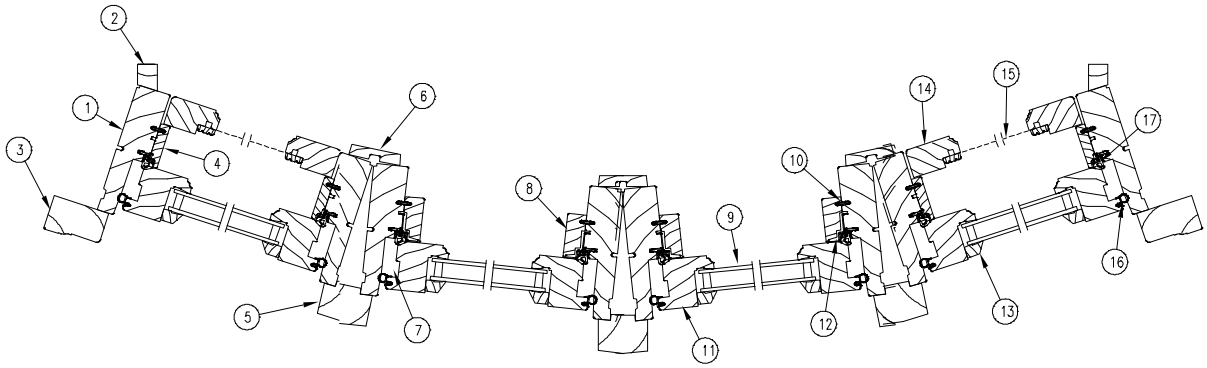

JAMB DETAIL

NOTE: Not to scale; specifications subject to change without notice.

1. Jamb
2. Return Jamb
3. Side Brick Mould Casing
4. Jamb Stop
5. Exterior Mull Casing
6. Interior Mull Trim
7. Stationary Sash Block
8. Stationary Side Stop
9. Insulated Glass
10. Connecting Barb
11. Stile
12. Stationary Sash Bracket
13. Glazing Bead
14. Wood Screen Frame
15. Screen Mesh
16. Sash Weather Strip
17. Frame Weather Strip

PART IDENTIFICATION

WOOD ULTIMATE DOUBLE HUNG BAY

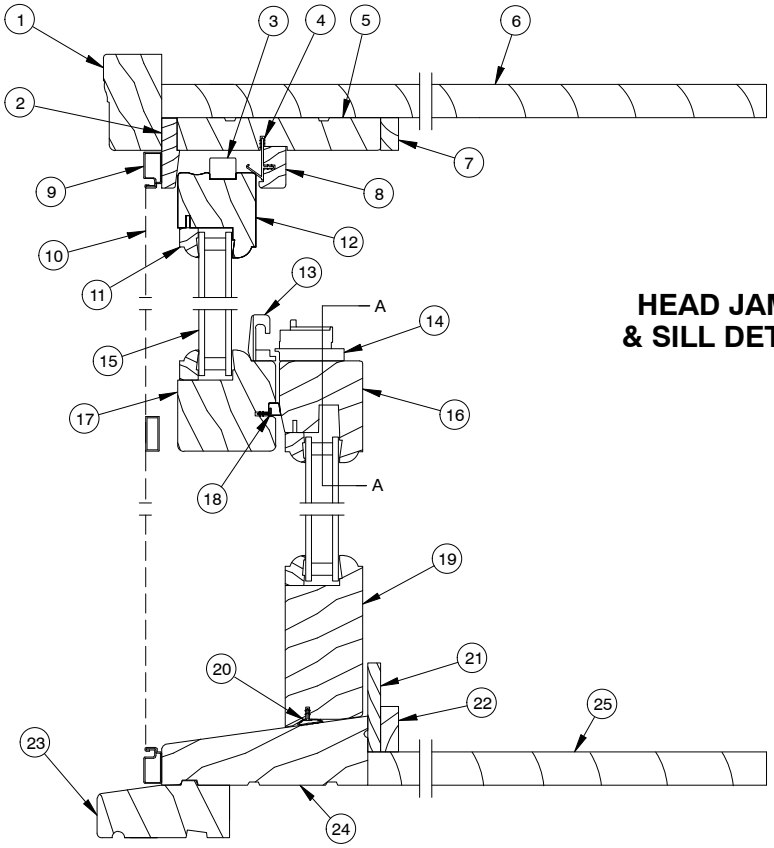

HEAD JAMB & SILL DETAIL

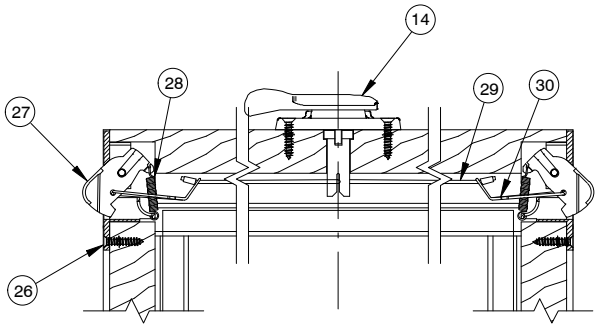

SECTION A–A

NOTE: Not to scale; specifications subject to change without notice.

1. Top Brick Mould Casing
2. Top Blind Stop
3. Tilt Latch
4. Parting Stop Weather Strip
5. Head Jamb
6. Head Board
7. Top Interior Trim
8. Parting Stop
9. Screen Frame
10. Screen Mesh
11. Glazing Bead
12. Top Rail
13. Sash Keeper
14. Sash Lock
15. Insulated Glass
16. Bottom Check Rail
17. Top Check Rail
18. Check Rail Weather Strip
19. Bottom Rail
20. Bottom Rail Weather Strip
21. Sill Liner
22. Bottom Interior Trim
23. Subsill
24. Sill
25. Seat Board
26. End Plate
27. Locking Blade
28. Extension Spring
29. Operation Cord
30. Pull Yoke

PART IDENTIFICATION

WOOD ULTIMATE DOUBLE HUNG BAY

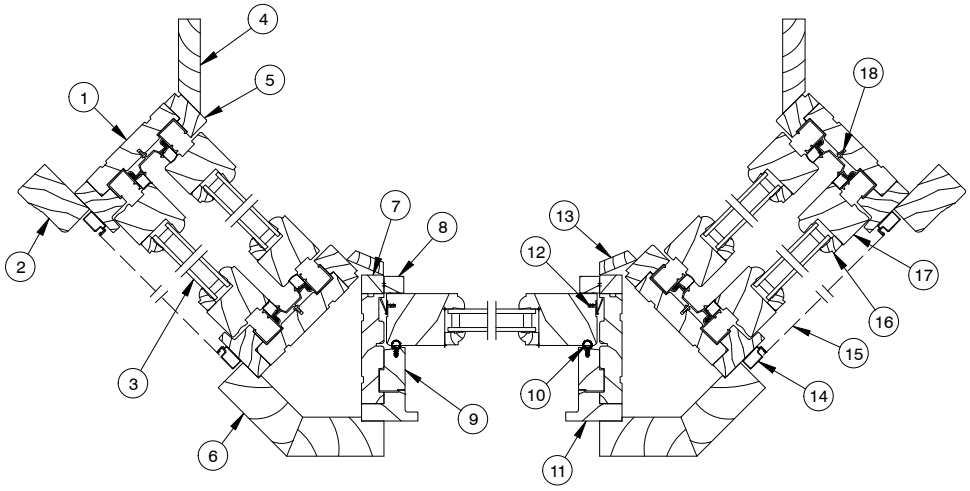

JAMB DETAIL

NOTE: Not to scale; specifications subject to change without notice.

1. Jamb
2. Side Brick Mould Casing
3. Insulated Glass
4. Return Jamb
5. Jamb Liner
6. Exterior Mull Casing
7. Picture Jamb Liner
8. Interior Stop
9. Exterior Filler
10. Exterior Filler Weather Strip
11. Exterior Blindstop
12. Vinyl Retainer
13. Interior Mull Trim
14. Screen Frame
15. Screen Mesh
16. Glazing Bead
17. Stile
18. Vinyl Jamb Carrier

PART IDENTIFICATION

CLAD ULTIMATE DOUBLE HUNG BAY

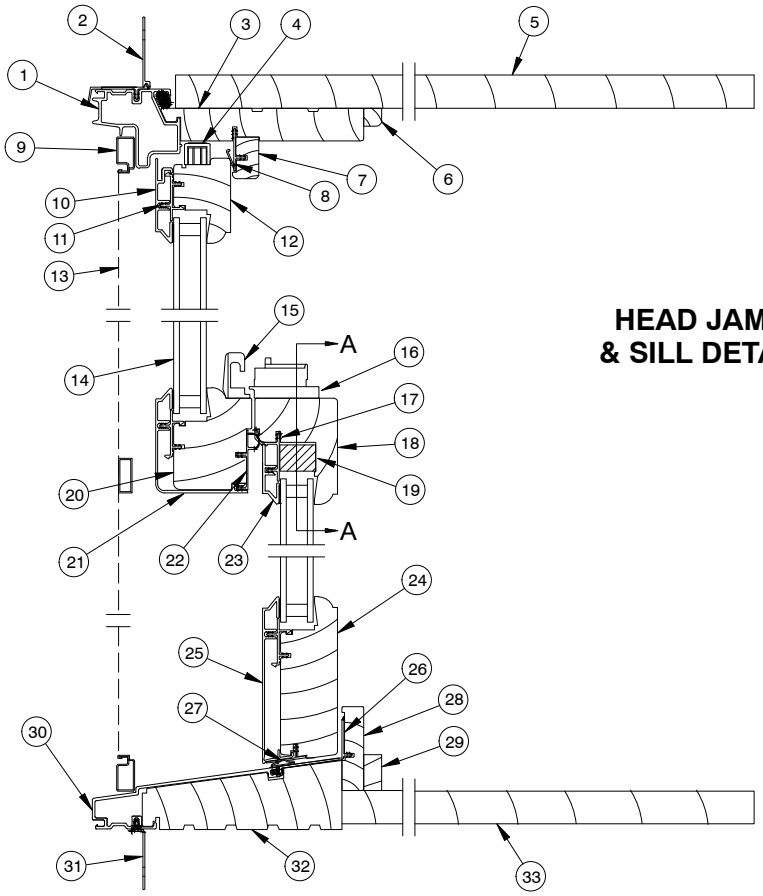

HEAD JAMB & SILL DETAIL

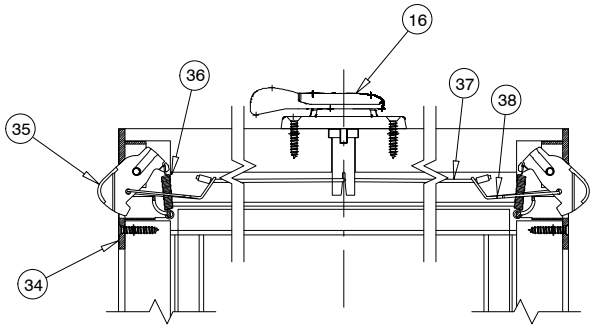

SECTION A–A

NOTE: Not to scale; specifications subject to change without notice.

1. Head Jamb Cladding
2. Head Jamb Nailing Fin/Drip Cap
3. Head Jamb
4. Tilt Latch
5. Head Board
6. Top Interior Trim
7. Parting Stop
8. Parting Stop Weather Strip
9. Screen Frame
10. Top Rail Cladding
11. Sash Cladding Clip
12. Top Rail
13. Screen Mesh
14. Insulated Glass
15. Sash Keeper
16. Sash Lock
17. Bottom Checkrail Cladding Connection
18. Bottom Checkrail
19. Bottom Checkrail Sub. Assembly (Section A–A)
20. Top Checkrail
21. Top Checkrail Cladding
22. Top Checkrail Weather Strip
23. Bottom Checkrail Cladding
24. Bottom Rail
25. Bottom Rail Cladding
26. Sill Cover
27. Bottom Rail Weather Strip
28. Sill Liner
29. Bottom Interior Trim
30. Sill Cladding
31. Sill Nailing Fin
32. Sill
33. Seat Board
34. End Plate
35. Locking Blade
36. Extension Spring
37. Operation Cord
38. Pull Yolk

PART IDENTIFICATION

CLAD ULTIMATE DOUBLE HUNG BAY

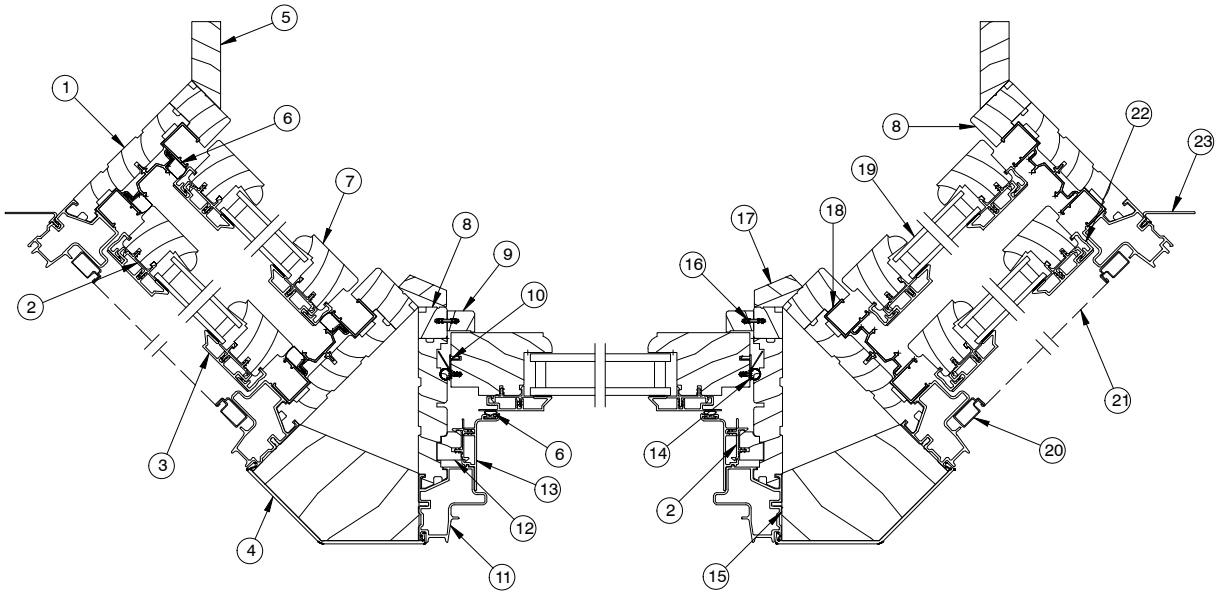

JAMB DETAIL

NOTE: Not to scale; specifications subject to change without notice.

1. Jamb
2. Sash Cladding Connector
3. Stile Cladding
4. Clad Mull Cap
5. Return Jamb
6. Frame Weather Strip
7. Stile
8. Jamb Liner
9. Interior Sash Stop
10. Vinyl Retainer
11. Jamb Cladding
12. Jamb Block
13. Jamb Filler Cladding
14. Sash Weather Strip
15. Mull Block
16. Connecting Barb
17. Interior Mull Trim
18. Vinyl Jamb Carrier
19. Insulated Glass
20. Screen Frame
21. Screen Mesh
22. Contact Strip
23. Jamb Nailing Fin

PART IDENTIFICATION

WOOD 90° BENT GLASS TRIANGLE BAY

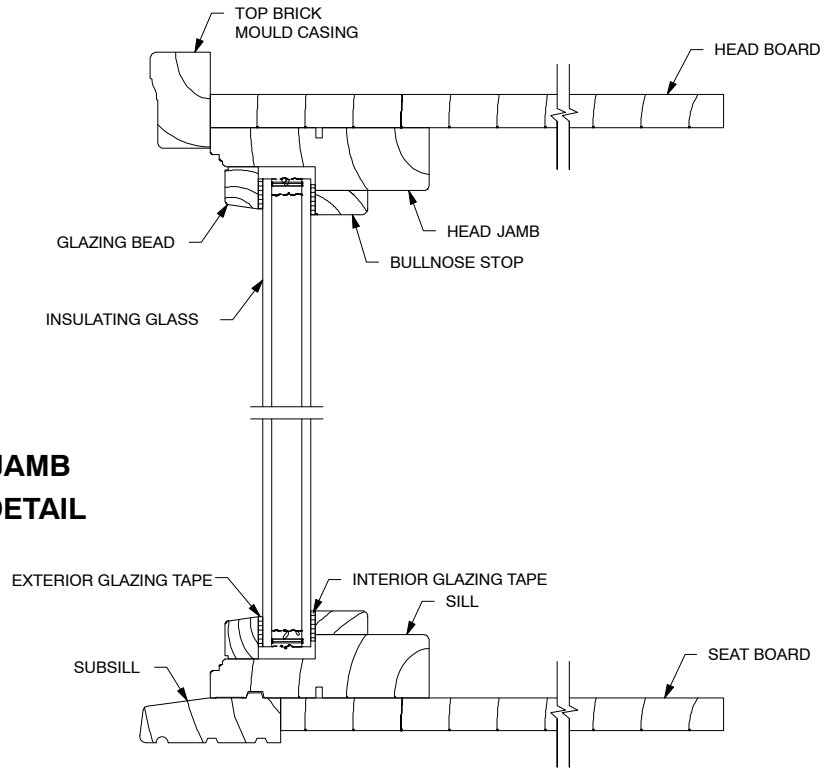

HEAD JAMB & SILL DETAIL

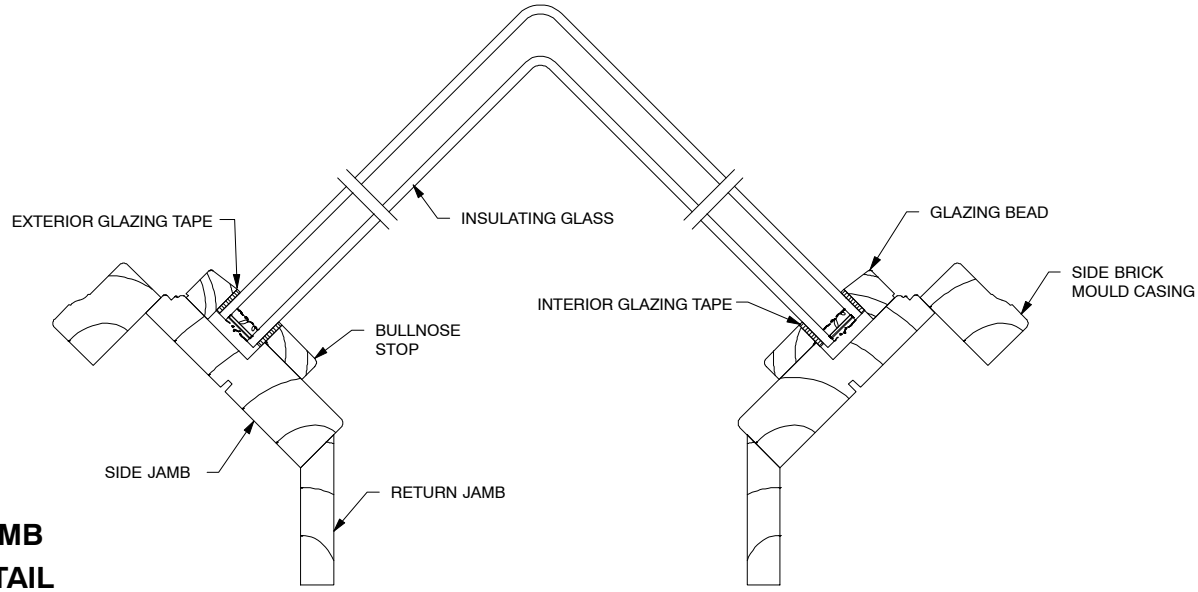

JAMB DETAIL

NOTE: Not to scale; specifications subject to change without notice.

REPLACEMENT PARTS FOR BOWS AND BAYS

Wood and Clad Ultimate Double Hung, Ultimate Casement and Casemaster Bows or Bays utilize many of the parts found in their respective sections of the Parts Manual. Please refer to these for additional information.

REPLACEMENT ALUMINUM BOW AND BAY PARTS

When ordering replacement aluminum parts specify:

1. profile number;
2. finish.

NOTE: Most replacement aluminum parts are supplied in 168″ (4267) or 150″ (3810) lengths.

	CLAD
Mull Cap – Bow	A124
Mull Cap – 30° Bays	A122
Mull Cap – 45° Bays	A123
Corner Cover – 90° Bays	A127
3″ Frame Expander	A109
2″ Mullion Expander	A108

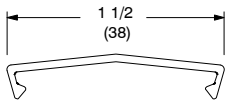

A124 – Mull Cap Bow

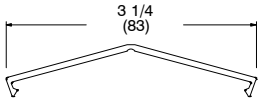

A122 – Mull Cap 30° Bays

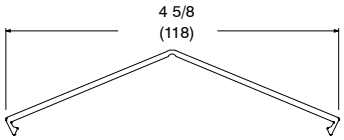

A123 – Mull Cap 45° Bays

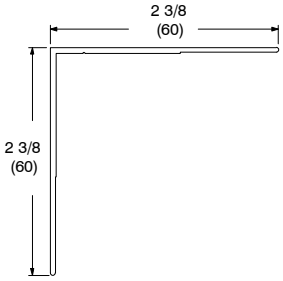

A127 – Corner Cover 90° Bays

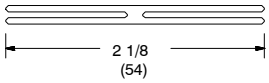

A108 – 2″ Mullion Expander

(Misc Mouldings, Extrusions and Accessories section)

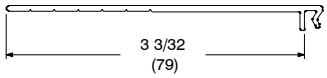

A109 – 3″ Frame Expander

(Misc Mouldings, Extrusions and Accessories section)

CURRENT REPLACEMENT BOW AND BAY WOOD PARTS
For Clad and Wood Ultimate Double Hung (UDH), Ultimate Casement (UCA) and Casemaster (CM)

	CLAD	WOOD
Interior Trim – UCA/CM Bow/Bay (top or bottom) UDH Bay (bottom)	W6110	W6110
Interior Trim – UDH Bay (top)	W1181	W1181
Interior Mull Trim – UCA/CM Bow & Clad UDH	W1189	W1189
Interior Mull Trim – 30 degree UCA/CM Bay	W1185	W1185
Interior Mull Trim – 45 degree UCA/CM Bay	W1187	W1187
Interior Mull Trim – 60 degree UCA/CM Bay	– – –	W1176
Interior Mull Trim – 90 degree UCA/CM Bay	W1179	W1179
Interior Mull Trim – 30 degree UDH Bay	W1182	W1182
Interior Mull Trim – 45 degree UDH Bay	W1184	W1184
Interior Mull Trim – 60 degree UDH Bay	– – –	W1177
Interior Mull Trim – 90 degree UDH Bay	W1178	W1178
Exterior Mull Casing – UCA/CM Bow	– – –	W1132
Exterior Mull Casing – 30° UCA/CM Bay	– – –	W1102
Exterior Mull Casing – 45° UCA/CM Bay	– – –	W1104
Exterior Mull Casing – 60° UCA/CM Bay	– – –	W1106
Exterior Mull Casing – 90° UCA/CM Bay	– – –	W1108
Exterior Mull Casing – 30° UDH Bay	– – –	W1110
Exterior Mull Casing – 45° UDH Bay	– – –	W1112
Exterior Mull Casing – 60° UDH Bay	– – –	W1114
Exterior Mull Casing – 90° UDH Bay	– – –	W1116
Mull Block – Clad UCA/CM Bow	W7318	– – –
Mull Block – 30° Clad Bays	W7308	– – –
Mull Block – 45° Clad Bays	W7310	– – –

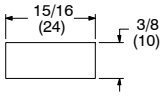

W6110 – Interior Trim UCA/CM Bow/Bay (top or bottom) UDH (bottom)

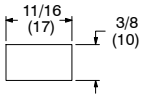

W1181 – Interior Trim – UDH Bay (top)

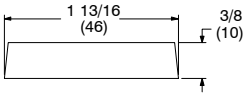

W1189 – Interior Mull Trim - UCA/CM Bow and Bay Clad UDH

W1185 – Interior Mull Trim – 30° UCA/CM Bay

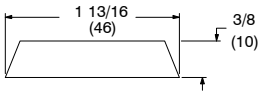

W1187 – Interior Mull Trim – 45° UCA/CM Bay

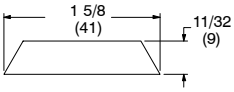

W1176 – Interior Mull Trim – 60° Wood UCA/CM Bay

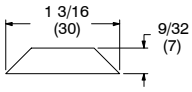

W1179 – Interior Mull Trim – 90° UCA/CM Bay

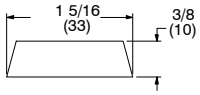

W1182 – Interior Mull Trim – 30° UDH Bay

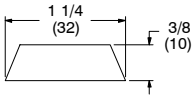

W1184 – Interior Mull Trim – 45° UDH Bay

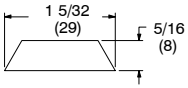

W1177 – Interior MullTrim – 60° Wood UDH Bay

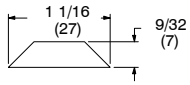

W1178 – Interior Mull Trim – 90° UDH Bay

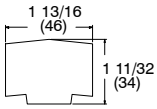

W1132 – Exterior Mull Casing UCA/CM Bow

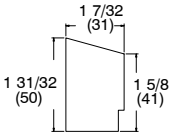

W1102 – Exterior Mull Casing – 30° UCA/CM Bay

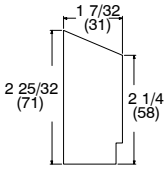

W1104 Exterior Mull Casing – 45° UCA/CM Bay

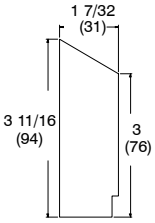

W1106 Exterior Mull Casing – 60° UCA/CM Bay

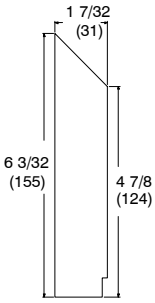

W1108 Exterior Mull Casing – 90° UCA/CM Bay

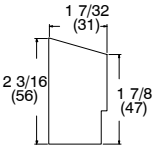

W1110 Exterior Mull Casing – 30° UDH Bay

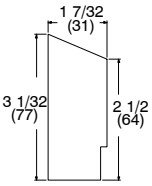

W1112 – Exterior Mull Casing – 45° UDH Bay

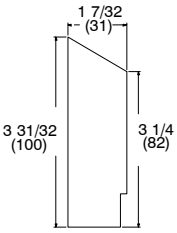

W1114 – Exterior Mull Casing – 60° UDH Bay

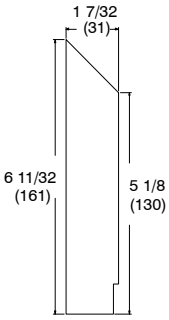

W1116 – Exterior Mull Casing – 90° UDH Bay

TO ORDER REPLACEMENT WOOD PARTS

When ordering replacement wood parts specify:

1. profile number;
2. size – (call number or length);
3. finish.

NOTE: Wood bay exterior mull casing is shipped as an assembled pair.

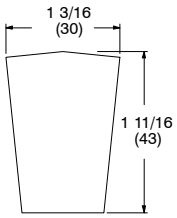

W7318 – Mull Block Clad UCA/CM Bow

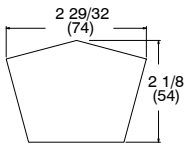

W7308 – Mull Block 30° Clad Bays

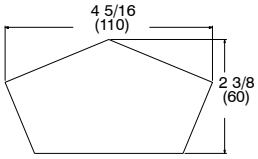

W7310 – Mull Block 45° Clad Bays

TO ORDER REPLACEMENT HEAD OR SEAT BOARDS

NOTE: REPLACEMENT HEAD AND SEAT BOARD MATERIAL IS RECTANGULAR IN SHAPE. For assistance in determining size required contact Marvin Technical Support with the unit type & finish (bow/bay, clad/wood), angle (30/45/90, etc), unit size, projection and jamb depth.

PLYWOOD CORE/CLEAR PINE VENEER HEAD AND SEAT BOARD AVAILABILITY CHART

Stock Size	Part Number
16 x 72	18218202
16 x 96	18218204
16 x 108	18218206
18 x 72	18218402
18 x 84	18218404
18 x 108	18218406
20 x 84	18218602
20 x 96	18218604
20 x 108	18218606
20 x 120	18218608
22 x 72	18218702
22 x 84	18218704
22 x 96	18218706
22 x 108	18218708
22 x 132	18218710
24 x 72	18218902
24 x 84	18218904
24 x 96	18218906
24 x 120	18218910
24 x 132	18218912
24 x 144	18218914
26 x 84	18219002
26 x 108	18219004
27 x 120	18219104
28 x 96	18219202
28 x 108	18219204
30 x 108	18219302
30 x 132	18219304
30 x 144	18219306
42 x 168	18219510

OPTIONAL PARTS

ILLUSTRATION *NOT TO SCALE*	DESCRIPTION	OPER./ COLOR	PART NO.
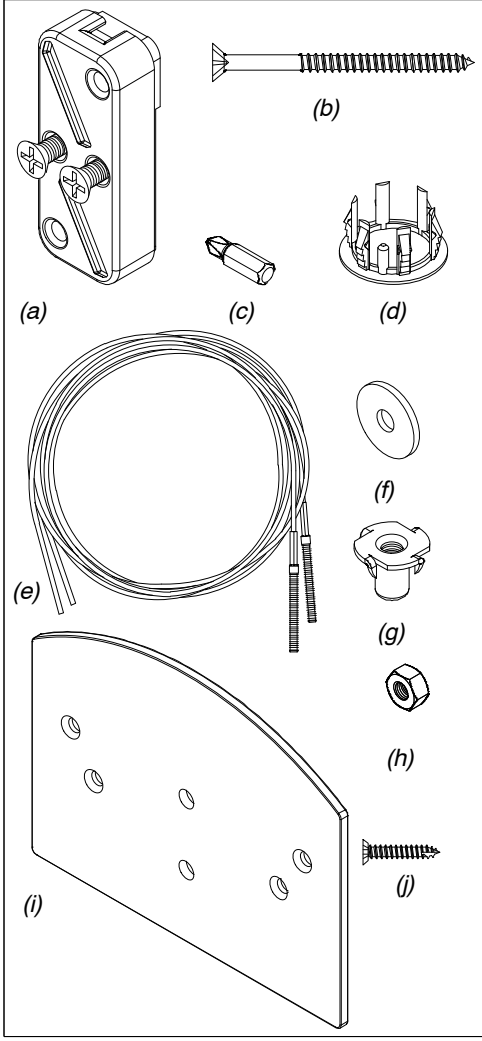	**Cable Support System – Field Installation Kit** *Includes:* *2 – Cable clamps 1/4″ x 3 1/8″ (zinc die–cast) (a)* *4 – Heavy–shank mounting screws #12 x 3″ (b)* *1 – #3 Phillips drive bit (c)* *2 – Adjustment hole plugs (d)* *2 – Cable assemblies – 9’ or 12’ x 1/8″ diameter (e)* *2 – Fender washers – 0.25″ x 0.265″ x 0.06″ (f)* *2 – T–nuts, 3 prong 5/16″ – 18″ x 3/8″ (g)* *4 – Heavy hex nuts 1/4″ – 28″ (h)* *2 – Installation Plates (10500560) (UDH units only) (i)* *4 – #7 x 7/8″ screws (11800778) (UDH units only) (j)*	9’ CM 12’ CM 9’ UDH 12’ UDH	11850134 11850135 11850136 11850137
	Bow/Bay Installation Plate Package *(UDH only)* *Includes:* *2 – Installation plates (10500560) (i)* *4 – #7 x 7/8″ screws (11800778) (j)*		11850133

OBSOLETE SUN BAY PARTS

When ordering obsolete Sun Bay parts specify:

1. part number;
2. description.

ILLUSTRATION *NOT TO SCALE*	DESCRIPTION	OPER./ COLOR	PART NO.
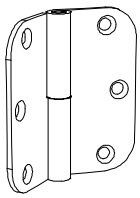	**Butt Hinge, Stainless Steel** *Includes:* *1 – SS hinge* *3 – SS #7x7/8″ Phillips head wood screws (11800777)* *3 – 8–32x5/8″ Phillips head machine screws (05080233) and T–nuts (05080234)* NOTE: Handing on butt hinges are viewed from the interior. Example – if your Sun Bay sash is on the right hand side of the unit, it requires a right hand hinge.	LH RH	10929102 10929103
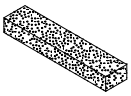	**Foam Pad, Butt Hinge**		No longer available
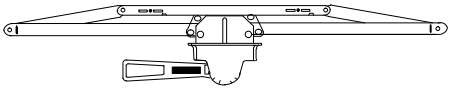	**Lever Operator** *Includes:* *1 – Dual pull lever operator* *4 – #8x1″ Phillips flathead wood screws* NOTE: Handing on operators are viewed from the interior. Example – if your Sun Bay sash is on the right hand side of the unit, it requires right hand hardware.	LH BZ LH WH LH BS RH BZ RH WH RH BS	No longer available No longer available
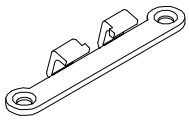	**Sash Hook** *Includes:* *1 – Sash hook* *2 – #7HD – #8x1″ Phillips flathead wood screws (11800773)*		10820008

OBSOLETE REPLACEMENT WOOD PARTS

Glazing Stop – Head Jamb	W7054
Glazing Stop – Top Mull	W7056
Glazing Stop – Bottom Mull	W7058
Glazing Stop – Sloped Top (1″ IG)	W4094
Glazing Stop – Front (3/16″ Single Glaze)	W4098
Screen Channel	W7028
Hardware Cover	W7064
Hardware Cover Filler	W7041
Mull Casing (top and front)	W6152

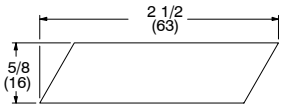

W7054 – Glazing Stop – Head Jamb

W7056 – Glazing Stop – Top Mull

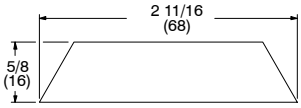

W7058 – Glazing Stop – Bottom Mull

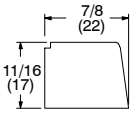

W4094 – Glazing Stop – Sloped Top (1″ IG)

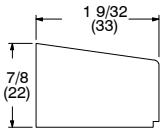

W4098 – Glazing Stop – Front (3/16″ Single Glaze)

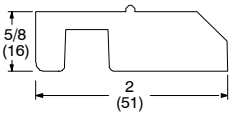

W7028 – Screen Channel

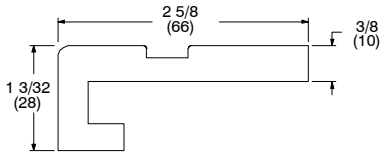

W7064 – Hardware Cover

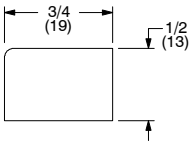

W7041 – Hardware Cover Filler

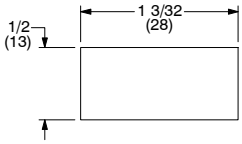

W6152 – Mull Casing (top and front)

When ordering replacement wood parts specify:

1. profile number;
2. call number or rough opening;
3. length;
4. finish.

OBSOLETE SASH REPLACEMENT

Sun Bays featured a direct glazed front and sloped top. Sun Bays sides were in-sash and are replaceable based on standard size in the chart below.

Call Number	OM of Sash
CN 1640	14 5/16″ width x 28 7/16″ (short side) x 36 11/16″ (long side)

When ordering replacement Sun Bays sash specify:

1. call number;
2. glazing;
3. finish;
4. handling (left or right as viewed from the exterior).

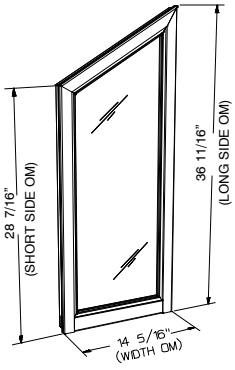

OBSOLETE WEATHER STRIP

OBSOLETE SUN BAY WEATHER STRIP

When ordering replacement weather strip specify:

1. quantity;
2. color;
3. part number;
4. description.

ILLUSTRATION *NOT TO SCALE*	DESCRIPTION	LENGTH	PART NUMBER
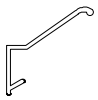	**Frame Weather Strip** V101 Used between 1983 – 1992 Color: White		No longer available Replaced with: – – – V673 – Top Casing V191 – Sash V192 – Head Jamb, Jamb and Sill
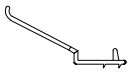	**Top Casing Weather Strip** V673 Used between 1992 – 1994 Color: Beige Replacement for V101.	84″ (2134) 144″ (3658)	15899984 15899999
	Sash Weather Strip V191 Used between 1992 – 1994 Color: Beige	150″ (3810)	No longer available
	Head Jamb, Jamb and Sill Weather Strip V192 Used between 1992 – 1994 Color: Beige	84″ (2134)	15900058

OBSOLETE SCREENS AND SCREEN PARTS

ORDERING REPLACEMENT SCREENS FOR SUN BAYS

Sun Bay side vent screens are available with aluminum surround and charcoal colored fiberglass 18 x 16 screen mesh. Aluminum mesh is available as an option in black, charcoal, bright aluminum or bright bronze. Surrounds are available in bronze or white.

NOTE: Dimensions shown are OM of screen.

When ordering replacement screen specify:

1. handing (left or right as viewed from the exterior)
2. color;
3. mesh type (if other than standard).

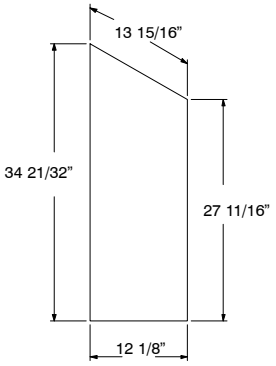

CN1640 SIDE VENT SCREEN

OBSOLETE SUN BAY SCREEN PARTS

ILLUSTRATION *NOT TO SCALE*	DESCRIPTION	OPER./COLOR	PART NO.
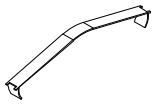	**Leaf Spring** M0104		11868835
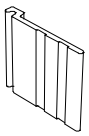	**Finger Pull, Clear** V254 Replaces colored finger pull		11860350

OBSOLETE ENERGY PANELS

ORDERING REPLACEMENT ENERGY PANELS FOR SUN BAYS

If you are replacing an existing energy panel, determine the outside measurement of the existing energy panel. Energy panels are available for Sun Bay side vents or front stationary panel with bronze, white, brown or pebble gray surrounds.

When ordering energy panels specify:

1. size;
   a. front EP – if there is no existing EP from which to obtain the OM (of the front panel), determine the size of the panel based on the chart below.
   b. side panel – specify handing (left or right as viewed from the exterior).
2. color of surround;
3. glass type.

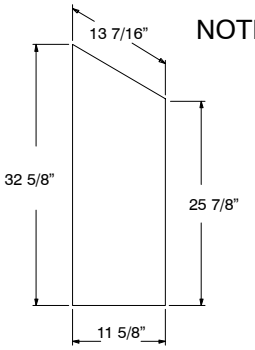

NOTE: Dimensions shown are OM of EP.

CN1640 SIDE VENT ENERGY PANEL

Sun Bay Front Stationary Energy Panel			
WIDTH		**HEIGHT**	
SIZE	**OM WIDTH**	**SIZE**	**OM HEIGHT**
WSBAY 40	40 13/16″	WSBAY	27 5/16″
WSBAY 48	48 13/16″		
WSBAY 56	56 13/16″		
WSBAY 64	64 13/16″		
WSBAY 72	72 13/16″		

OBSOLETE SUN BAY ENERGY PANEL PARTS

Energy panels are attached with turn buttons. Turn button styles may vary depending on current stock. You will receive the most current style in the color of your choice. (Obsolete black turn buttons will be replaced by brown.)

When ordering energy panels parts specify:

1. quantity;
2. description;
3. color;
4. part number.

ILLUSTRATION *NOT TO SCALE*	DESCRIPTION	PART NUMBER		
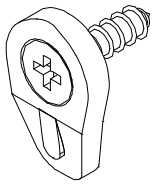	**Turn Buttons with SS Screws** #8x3/4″	Each	Pkg of 8	Pkg of 100
	AR	11869310	N/A	11869316
	BZ	11869311	11869451	11869317
	PB	11869312	11869452	11869318
	BN	11869313	11869453	11869319
	SW	11869314	11869454	11869320
	CL	11869315	11869455	11869321