WOOD ULTIMATE INSERT DOUBLE HUNG
Screen Installation Instructions

ATTENTION: The following instruction details the procedure to install a screen into a Wood Ultimate Insert Double Hung.

BEFORE YOU BEGIN

Check to insure that the screen will fit the opening and that you have all the parts necessary to complete installation.

PARTS SUPPLIED		
ILLUSTRATIONS (not to scale)	**DESCRIPTION AND COLOR**	**PART/PROFILE NUMBER**
	4– Screen Pin Receptacle 02061829	11900576
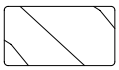	Exterior header and jamb trim	W8602
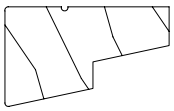	Exterior sill trim	W8599

YOU WILL NEED TO SUPPLY	
9/32″ drill bit	Power drill/driver
Hammer	Finishing nails
Reciprocating saw	Safety glasses

Installing Exterior Trim

1. Complete installation of the insert unit by inserting the optional exterior sill trim under the sill until the small dimple is aligned with the Insert unit sill. If necessary, trim the sill trim to fit. Nail the sill trim into place using 1 1/4″ finishing nails or staples. Next cut the optional Marvin head jamb trim to length, align with the groove on the insert header and nail into place. Cut the optional side jamb trim to length, align it with the groove on the insert jamb and nail into place. See illustration 1.

IMPORTANT: Proper placement of the exterior trim parts is required for installation of a Marvin screen.

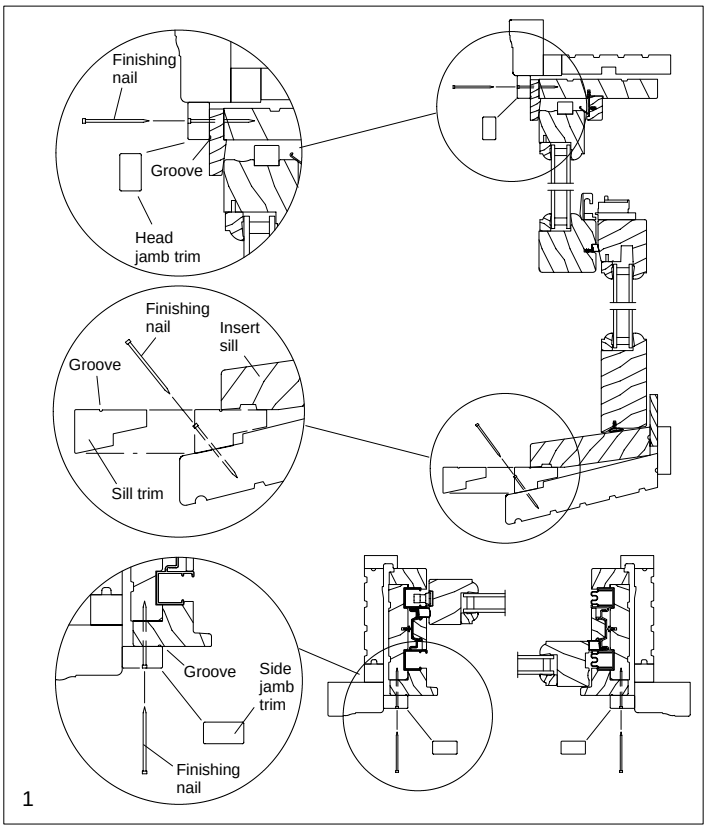

19972167
11/3/2003

Installing the Screen

2. Place the screen onto the WINDH unit and mark the location of the top and side plunger bolts. Drill a 9/32″ hole in the center of the screen channel at these locations and insert the supplied screen pin receptacle. See illustration 2.

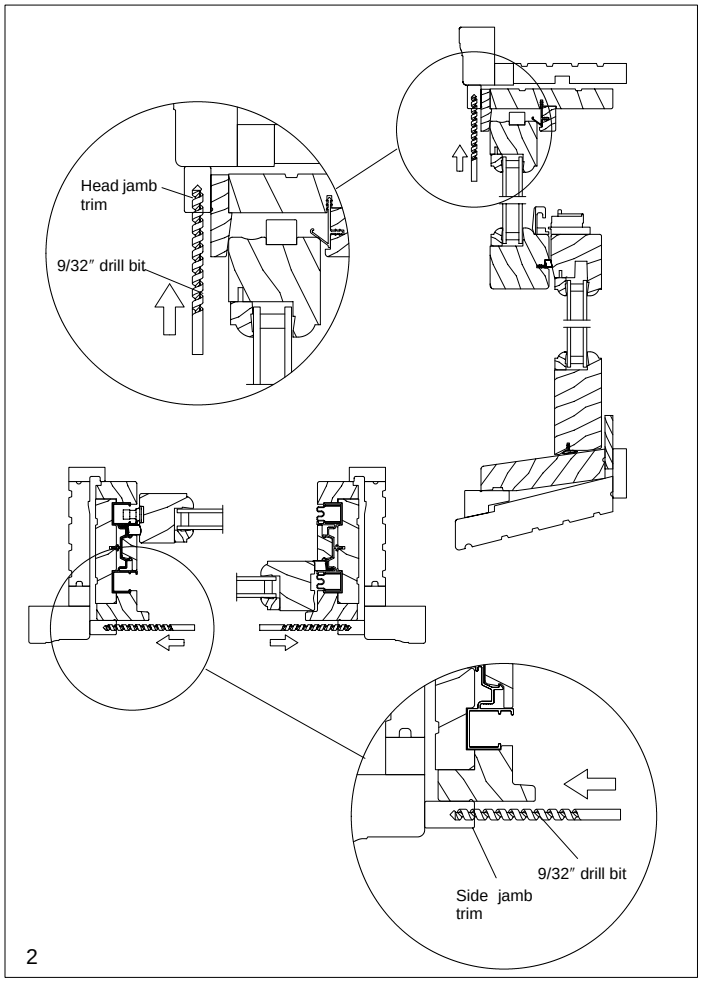
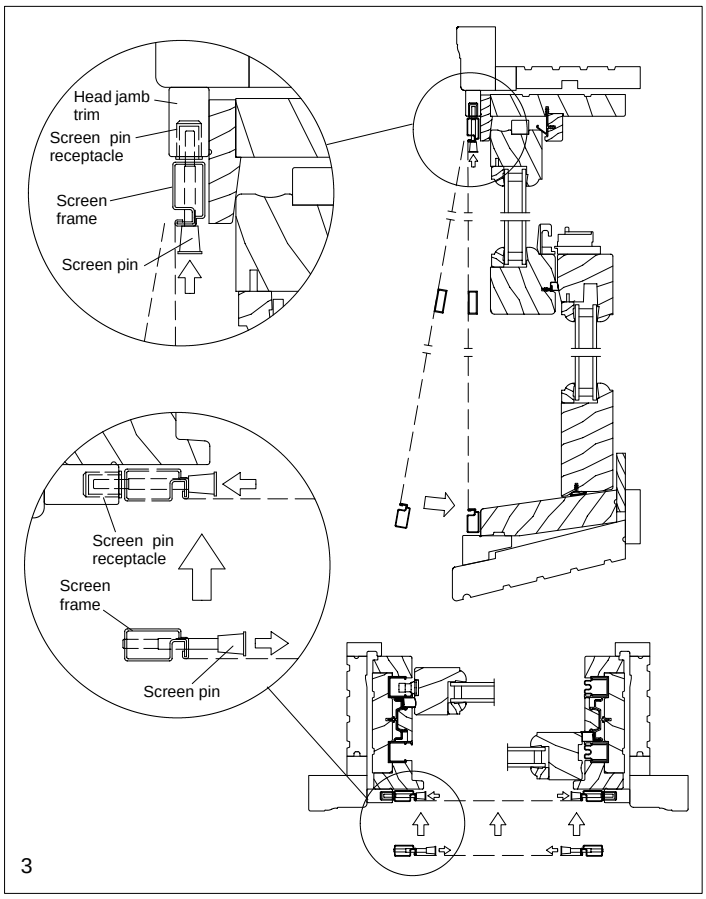
3. When installing screen, place screen sideways through window frame, turn to an upright position and place top plunger bolts into the screen pin receptacle located at head jamb. Pull screen towards the interior, holding the side plungers in the open position. When screen is flush against frame, release plungers to lock into the side screen pin receptacle. See illustration 3.