Clad Ultimate Insert Double Hung (CIndH)

Field Mulling Instructions

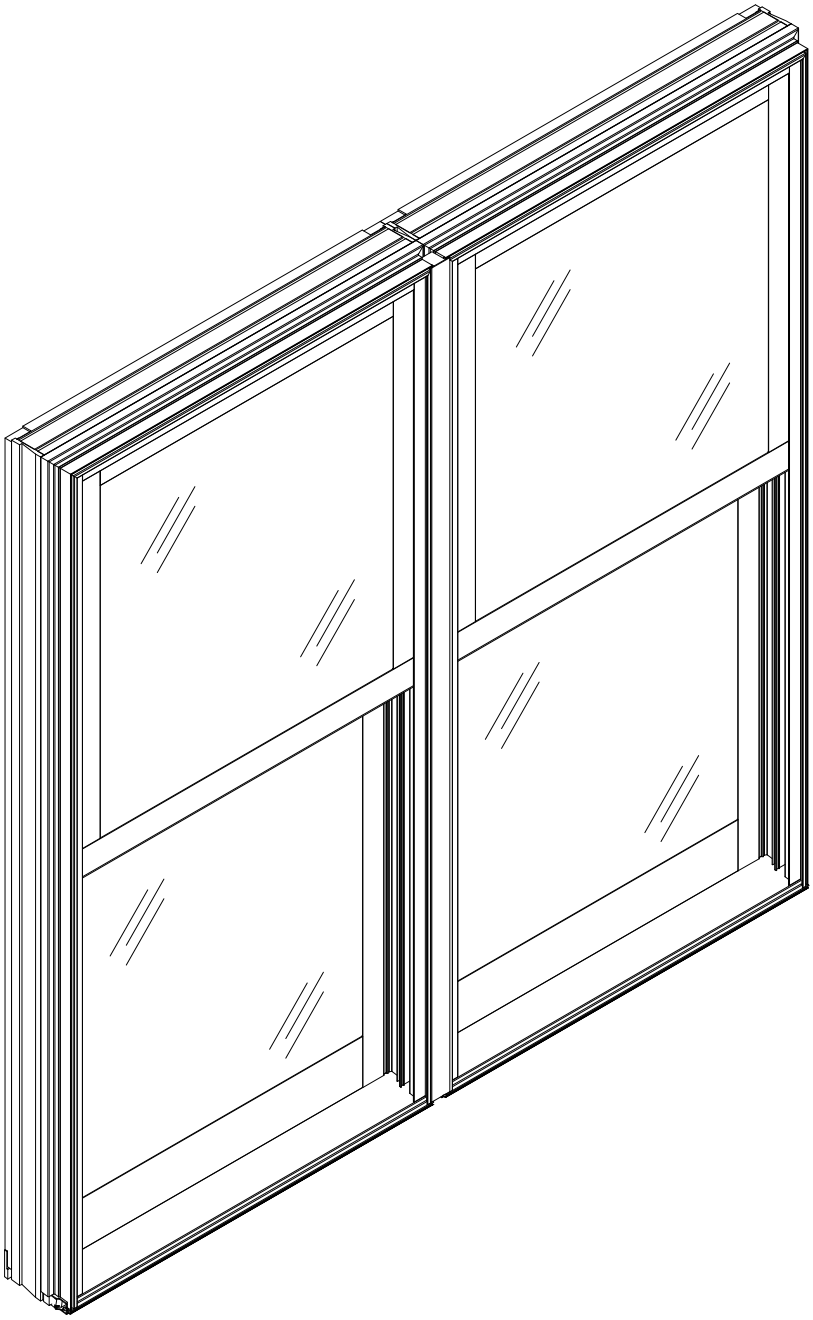

MARVIN®
Windows and Doors
Built around you.®

2013–02–27
19970085

Table of Contents

	Page
CINDH Vertical Mulling	1
CINDH Horizontal Mulling	6

Vertical Mulling

Note: Numbers listed in parentheses ( ) are metric equivalents in millimeters rounded to the nearest whole number.

Attention: The following instructions pertain to mulling a CINDH operator or picture unit to a CINDH operator or picture unit. Unless stated in the caption below the illustration or in the preceding text, the illustrations found in the following vertical mulling instructions will detail mulling two CINDH operator units.

You Will Need To Supply

Safety glasses	Scrap wood blocks
Hammer	Clamps
Screen spline roller	Power miter saw or hack saw
Power driver/drill with Phillips head bit	
1/2" x 5/8" crown staples with gun	

Vertical Mull Kit – 120″ (3048)

Color	Part Number
Stone White	11900556
Brown	11900546
Pebble	11900547
Bronze	11900548
Evergreen	11900549

Parts Supplied W/Vertical Mull Kit

ILLUSTRATIONS (not to scale)	DESCRIPTION AND COLOR	PART/PROFILE NUMBER
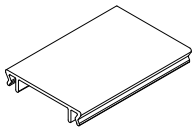	A111 Mull cover 120″ (3048)	SW 18600645 BN 18600611 PB 18600621 BZ 18600631 EG 18600641
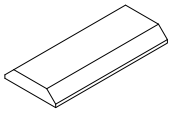	W1065 Vertical mull trim 120″ (3048)	30803098
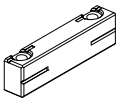	Mullion sill end plug	10500505
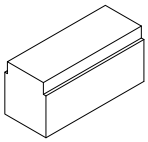	3 – Vertical mull foam filler 40″ (1016)	10500025
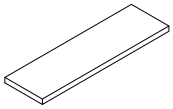	2 – 3/8 x 1/8″ Mull tape 120″ (3048)	10500051
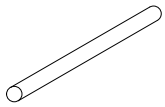	20′ (6096) – Frame kerf weatherstrip	15910100

Parts Supplied W/Vertical Mull Kit (Cont.)

ILLUSTRATIONS (not to scale)	DESCRIPTION AND COLOR	PART/PROFILE NUMBER
	1 – #10–24 x 1/4″ T–nut *(for operator to operator mulling only)*	05080251
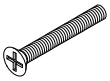	1 – #10 x 1 1/4″ Phillips flathead machine screw *(for operator to operator mulling only)*	05060500
	1 – Finish washer *(for operator to operator mulling only)*	05080311
	5 – #7 x 7/8″ Phillips flathead wood screws	11800778

Vertical Mull Procedures

1. Remove screen, sash, and any shipping material including banding at check rail. Remove any staples or nails from the frame that will interfere with the mulling and/or installation of assembly. Lay frames to be mulled on a flat sturdy surface in the desired mulling configuration exterior side up.
2. Remove the #7 x 1 1/2″ screws from sill corners on both units at mullion. Pry sill plug out with screw driver and discard. See illustration 1. For 14 degree sill, remove riser screws prior to removal of #7 x 1 1/2" screws. Save riser screws for later use. Rotate 14 degree sill upwards and snap riser off of unit.

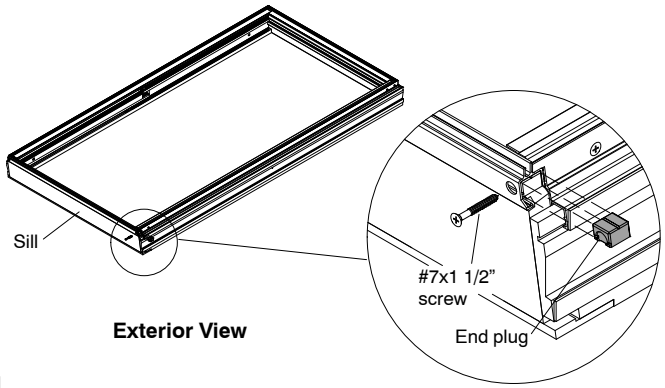

1

3. Insert the mullion sill end plug into sill cavity on one unit. Align holes on plug and sill. Fasten with the #7 x 1 1/2″ screw removed earlier. See illustration 2.

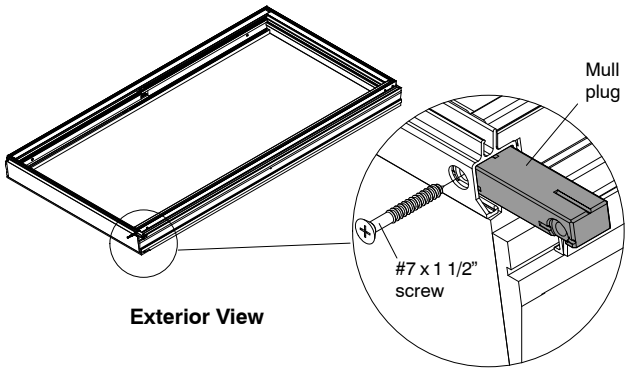

2

4. Apply mull sealing tape to the full length of one of the jambs where the cladding meets the wood frame member. Apply another length of tape to the wood frame member just behind jamb liner. See illustration 3. Remove paper backing from mull tape.

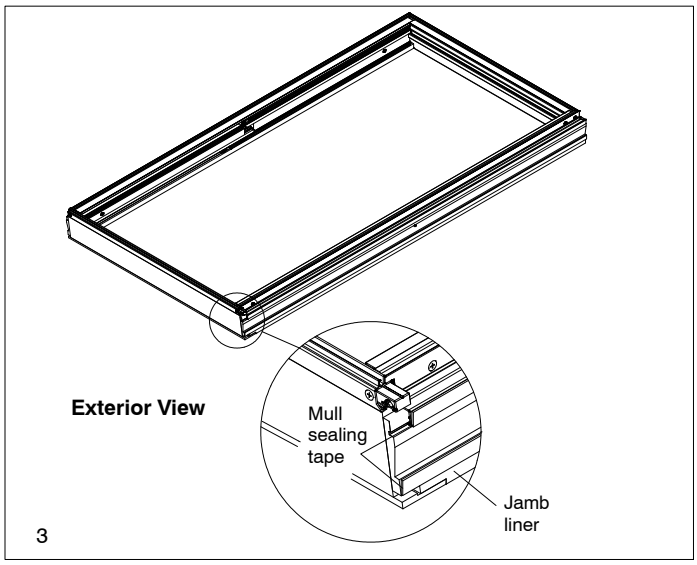

5. Turn frames over so the interior side is up. Slide units together making sure mull plug is inserted in sill cavity of adjacent unit as shown in illustration 4. Fasten with #7x1 1/2″ screw removed earlier.

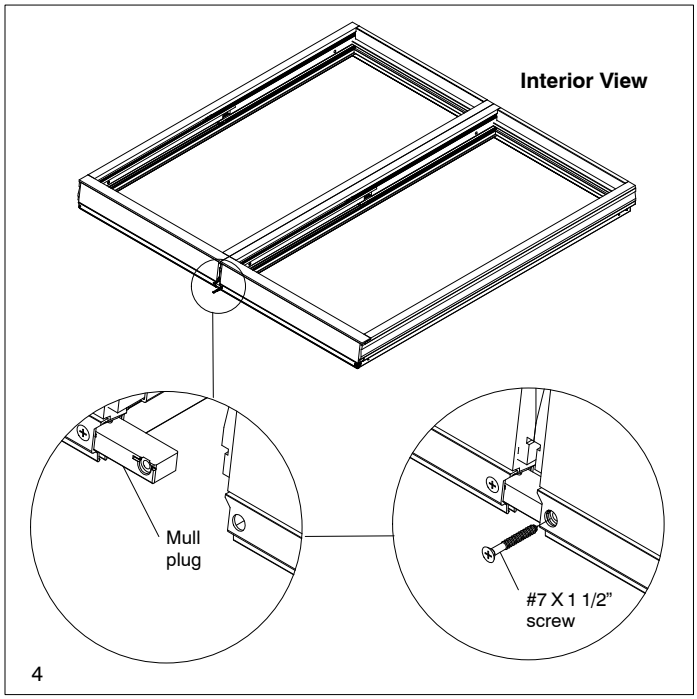

6. If mulling any configuration involving a picture unit skip to step 7. If mulling two operator units, insert T–nut in check rail installation hole on one jamb. Lightly clamp units on the interior so the jamb liners are flush. Make sure frames are even and flush at the sill. While holding T–nut, insert #10 x 1 1/4″ machine screw and finish washer from other side until it engages with the T–nut. Tighten machine screw. See illustration 5.

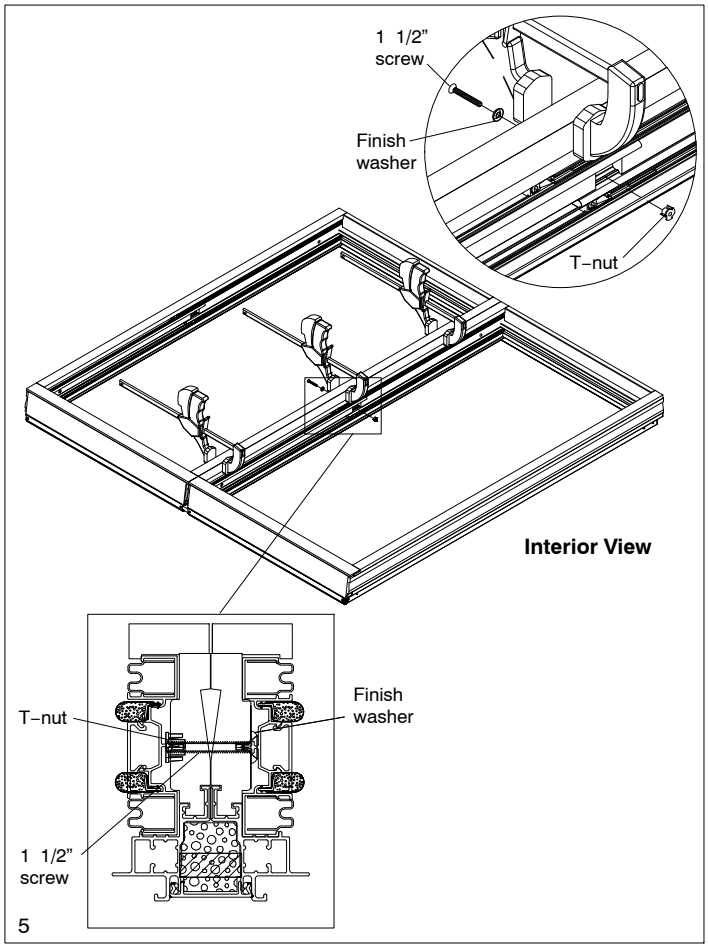

7. Continue mulling interior with 1/2″ x 5/8″ crown staples 2″(51) from each end and spaced every 3–5″ (76–127). See illustration 6. When mulling units involving an operator unit, skip to step 9.

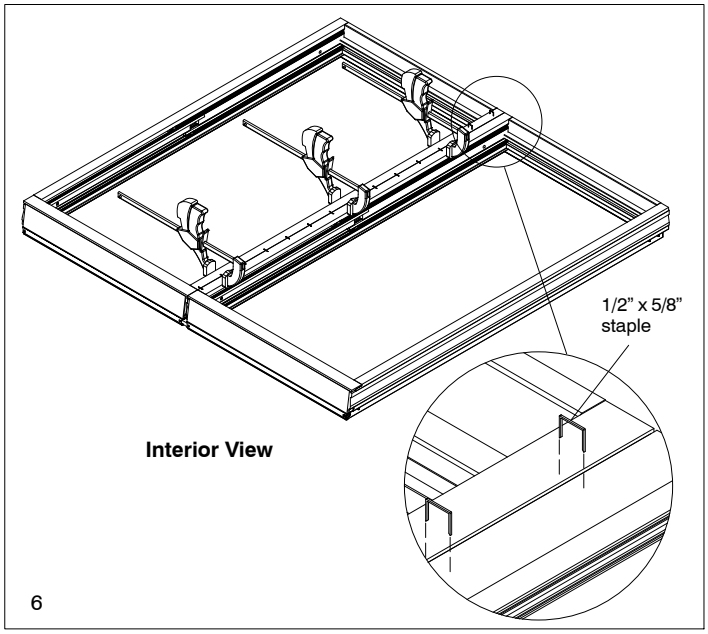

8. If mulling two operator units, fasten mulled jambs together by screwing one #7x7/8″ wood screw through the bottom installation hole from one side and inserting another screw through the top installation hole from the opposite side. See illustration 7. Skip to step 10.

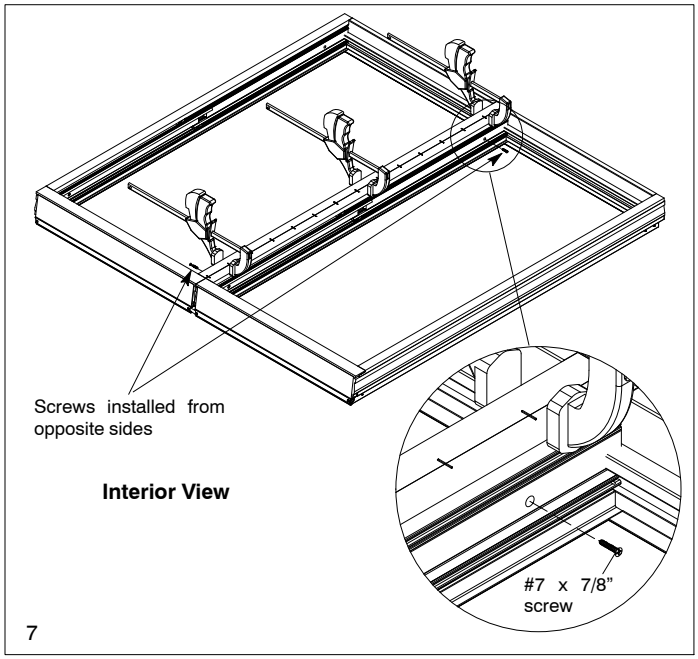

9. If mulling any configuration involving a picture unit, fasten jambs by driving the #7 x 7/8″ screws through the pre–drilled screw holes in picture units jambs as shown in illustration 8.

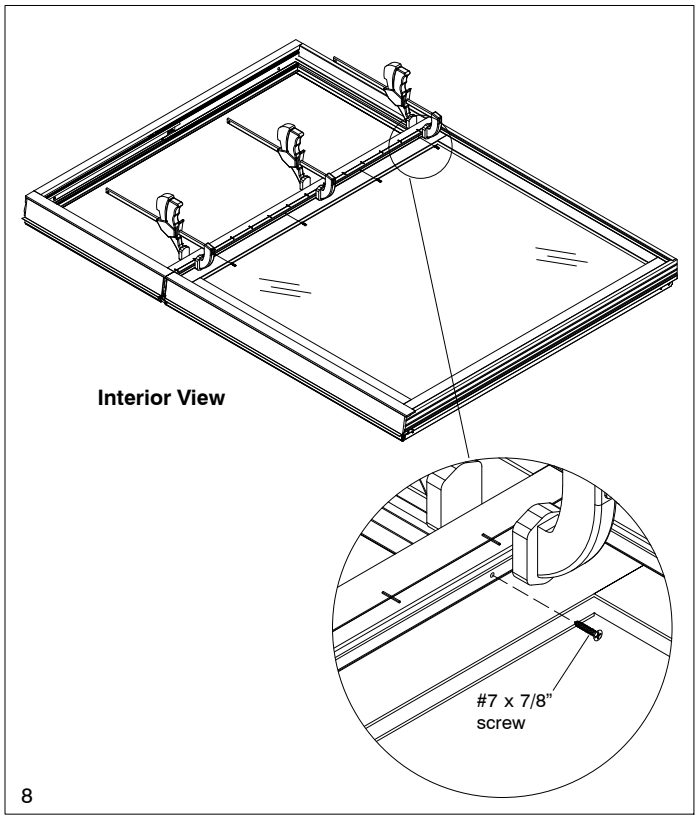

10. Carefully turn assembly over (exterior side up). Apply frame kerf weather strip to the vertical accessory kerf at mullion on both windows with a screen spline roller. Stop short of horizontal accessory kerf. See illustration 9.

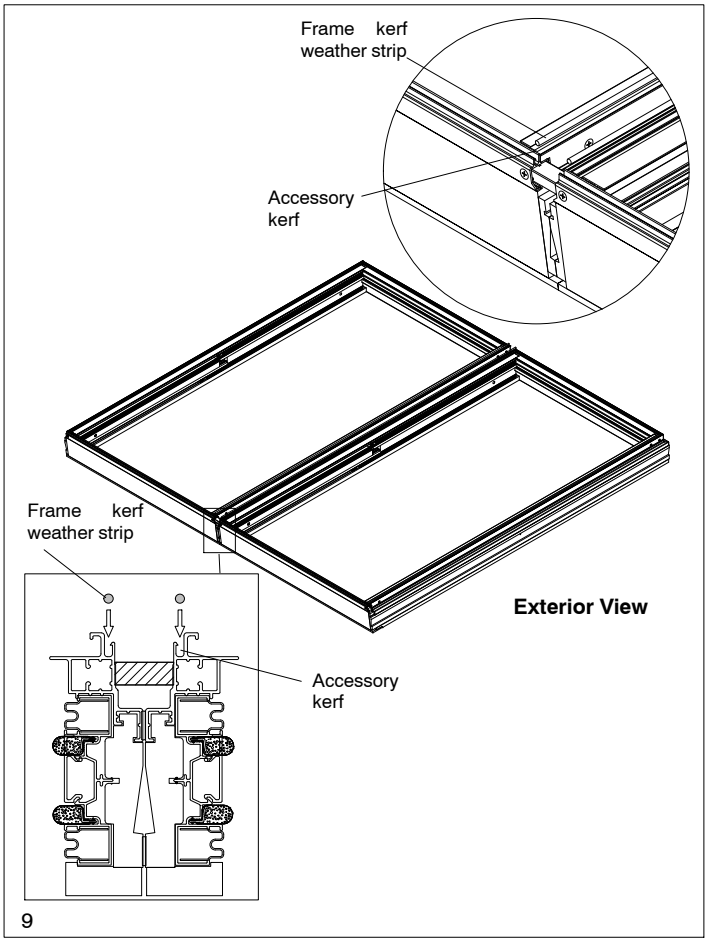

Note: Steps 11 and 12 are for units with a 14 degree sill riser only.

11. Attach the riser and weather strip to the sill as shown in illustration 10.

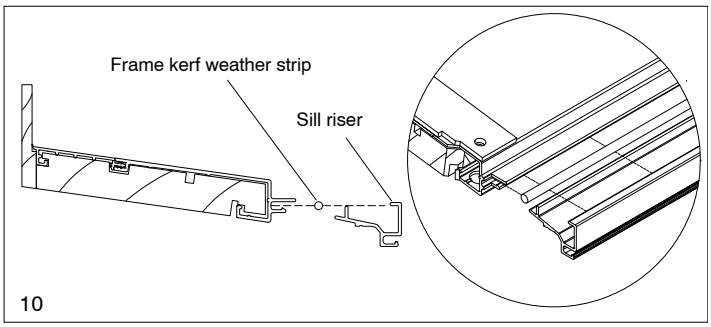

Note: Reuse existing screw holes in sill liner.

12. Fasten the riser to the sill with the same #8x5/8″ screws that were removed in step 1. See illustration 11.

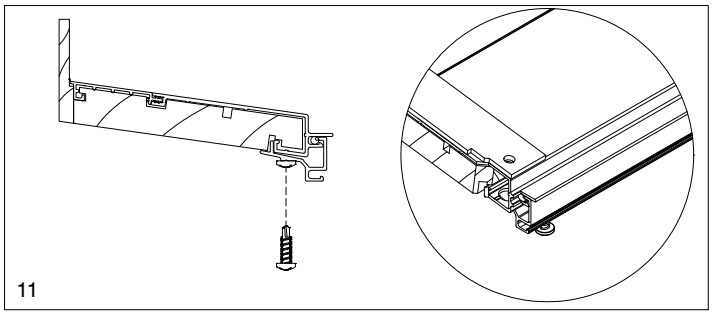

13. Cut a piece of the mull foam filler to the length of the mull and place in mull cavity. Foam filler should extend from the sill mull plug to the very top of the unit. See illustration 12.

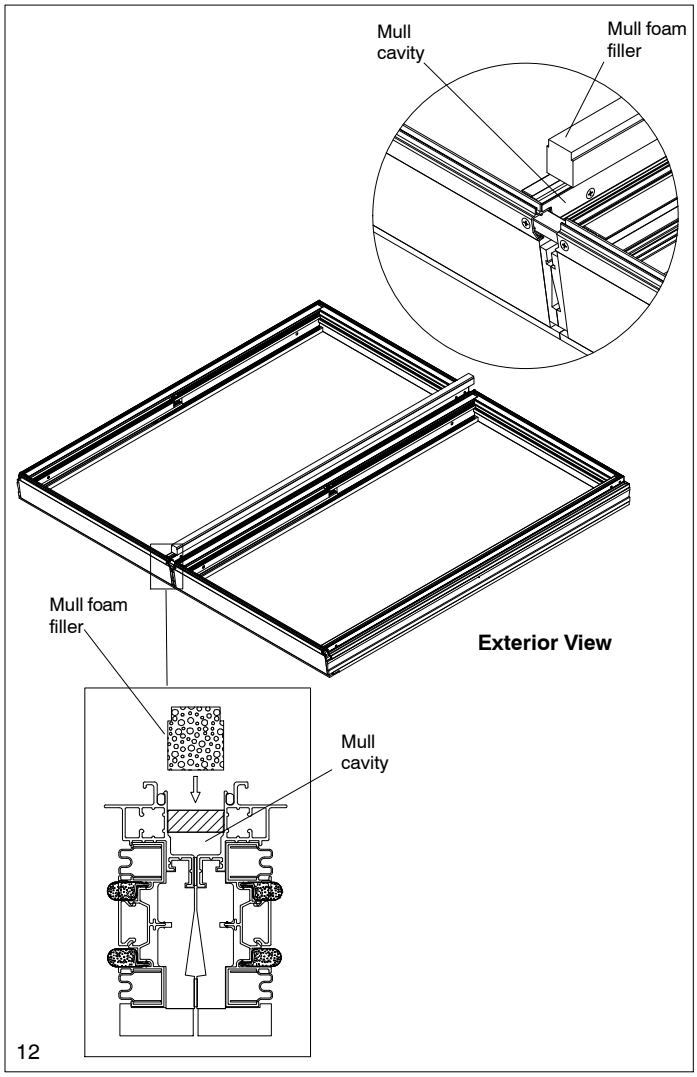

14. Measure length of mull from interior edge of accessory kerf on head jamb to interior edge of accessory kerf on sill or sill riser as shown in illustration 13. Transfer measurement to the aluminum mull cap and cut with a power miter saw.

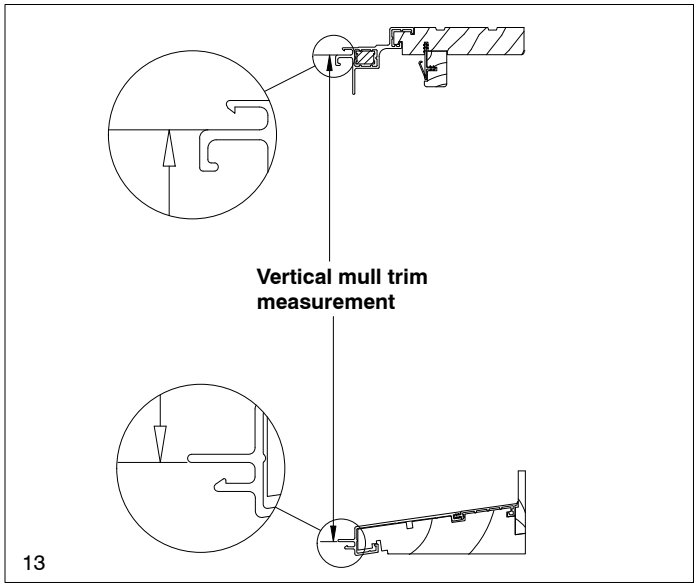

Note: Trim to interior edge of accessory kerf allows for installation frame expanders or trim coil

15. Apply a bead of sealant along both sides of foam filler. Sealant should run the entire length of the mull from the head jamb to the sill mull plug. Using a wood block and hammer, carefully pound mull cap into place making sure that it does not extend into horizontal accessory kerf. See illustration 14.

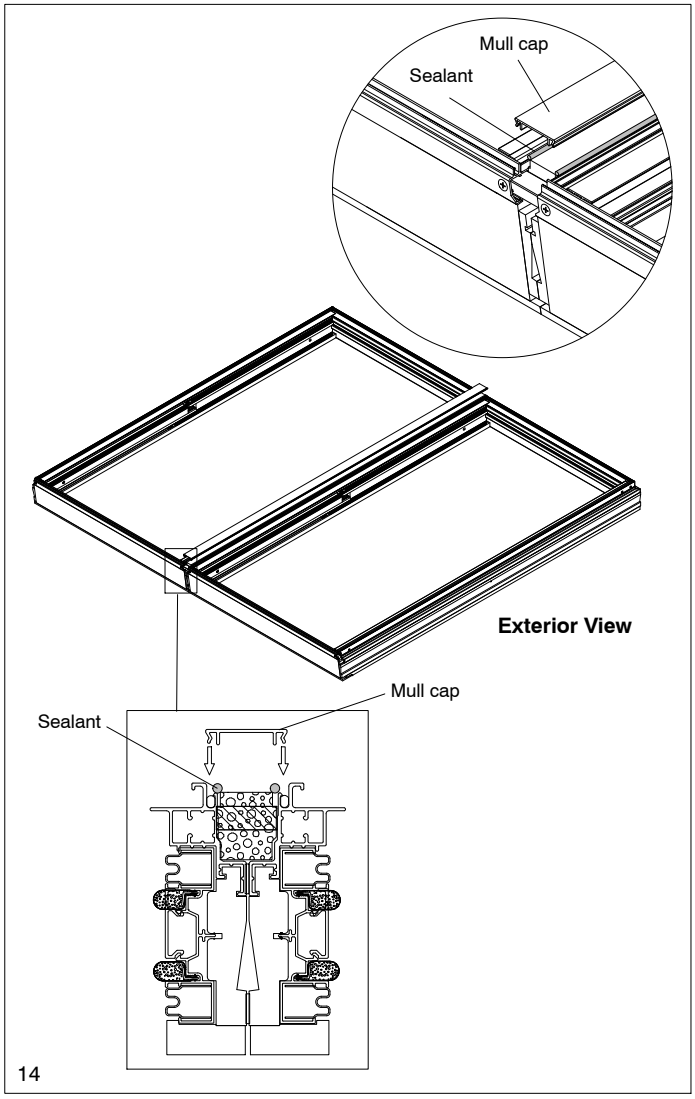

16. Install mulled insert window following supplied installation instructions. Interior mull trim should be applied after unit is completely installed and interior trim is applied.

Horizontal Mulling

Horizontal Mull Kit – 150″ (3810)	
Color	**Part Number**
Stone White	11900555
Brown	11900541
Pebble	11900542
Bronze	11900543
Evergreen	11900544

Parts Supplied W/Horizontal Mull Kit		
ILLUSTRATIONS (not to scale)	**DESCRIPTION AND COLOR**	**PART/PROFILE NUMBER**
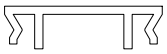	A1010 Mull cover 150″ (3810) SW BN PB BZ EG	 18803699 18574199 18574299 18574399 18574499
	W1243 Horizontal mull trim 150″ (3810)	30803397
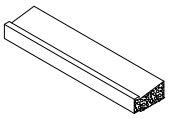	3– Horizontal mull foam filler 50″ (1270)	10500026
	5 – #7 x 7/8″ Phillips flathead wood screws	11800778
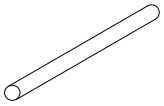	25′ (7620) – Frame kerf weather strip	15910100

Horizontal Mull Procedures

1. If applicable, remove screen, sash, and any shipping material including banding at check rail from operator unit. Remove any staples or nails from the frame that will interfere with the mulling and/or installation of assembly. Lay frames to be mulled on a flat sturdy surface in the desired mulling configuration, interior side up. Lightly clamp units together on interior so that transom sill and operator head jamb are flush on the interior and even at the ends. Fasten interior wood members with 1/2″ x 5/8″ crown staples 2″ from each end and spaced every 3–5″ (76–127). See illustration #1.

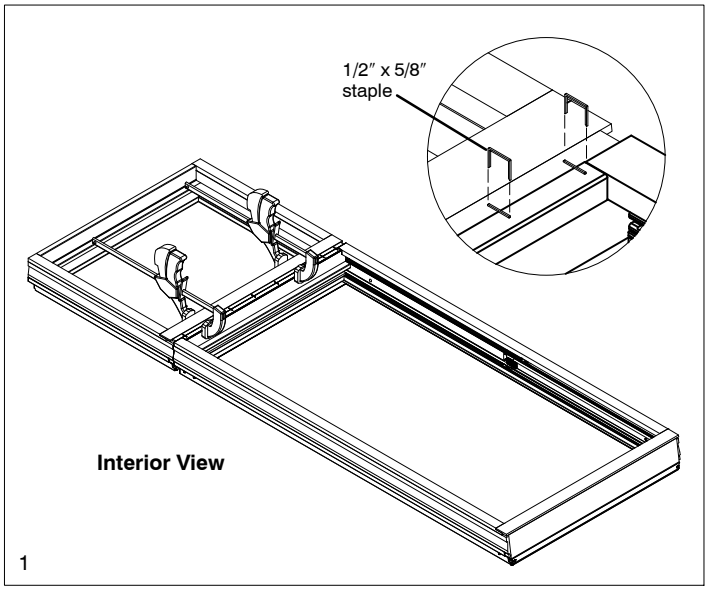

2. If applicable, remove head jamb parting stop from operator unit. Squeeze together the weather strip and wood portion of the parting stop and pull down as shown in illustration 2. Be careful not to tear the jamb weather strip.

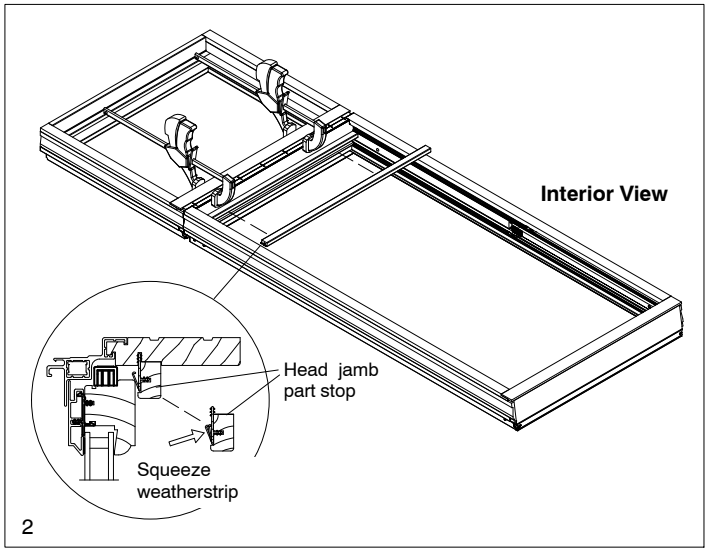

3. On operator units, countersink and pre−drill holes 4″ from each corner and one in the center of head jamb using a 1/8”(3) drill bit. Place holes on the groove used to hold in the parting stop. On picture units, use the holes already predrilled in the head jamb (done at the factory). Fasten the two units together with #7 x 7/8″ Phillips flat head wood screws as shown in illustration 3.

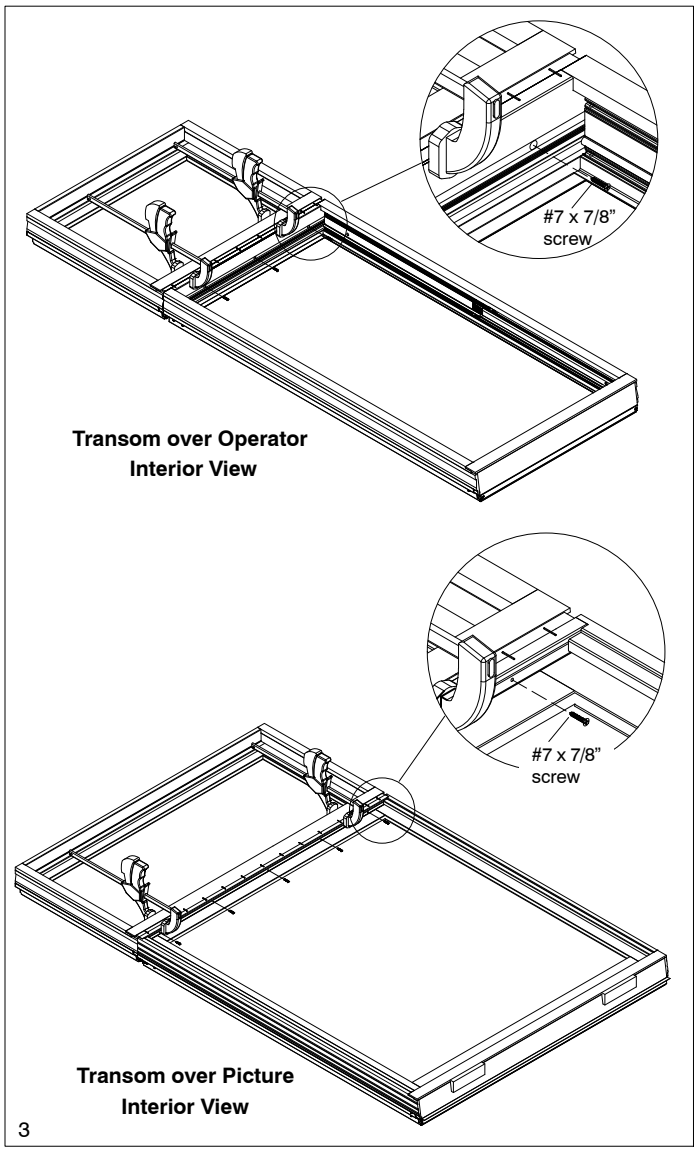

4. Carefully turn assembly over (exterior side up). Apply frame kerf foam weather strip to the horizontal accessory kerf at mullion on both windows with a screen spline roller or similar tool. weather strip should run just up to the vertical accessory kerf. See illustration 4.

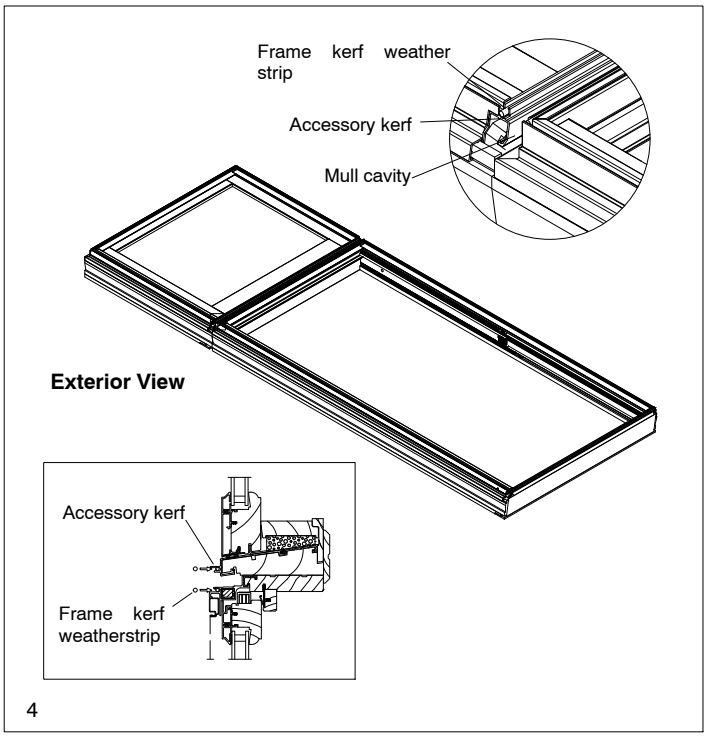

5. Measure the width of mull from interior edge of accessory kerf from jamb to jamb as shown in illustration 5. Transfer measurement to the aluminum mull cap and cut with a power miter saw or hacksaw.

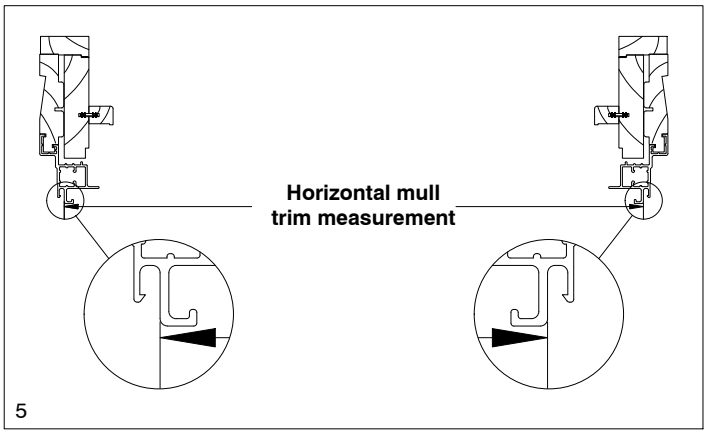

6. Cut the horizontal mull foam filler to the width of mull and place in mull cavity. Foam filler should extend the full width of the sill. See illustration 6.

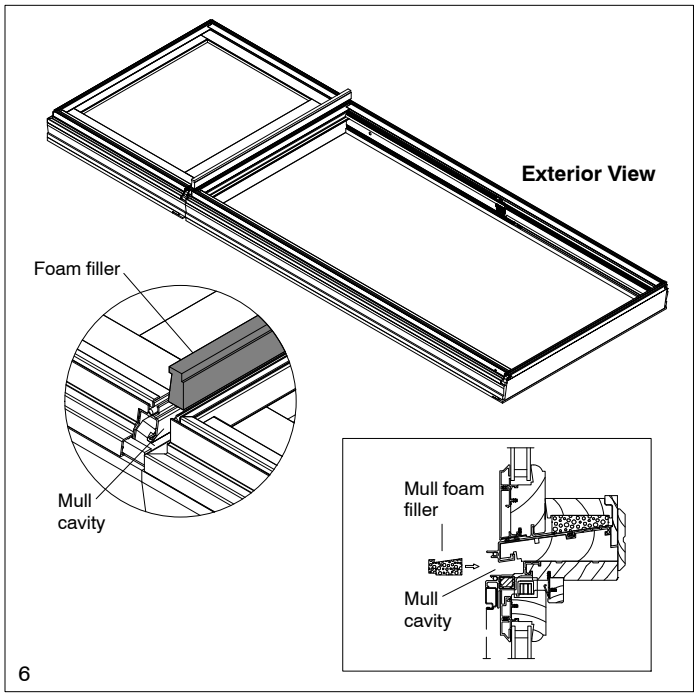

7. Apply a bead of sealant along both sides of foam filler. Sealant should run the entire length of the mull from jamb to jamb. Using a wood block and hammer, carefully pound mull cap into place making sure that it does not extend into the vertical accessory kerf. See illustration 7.

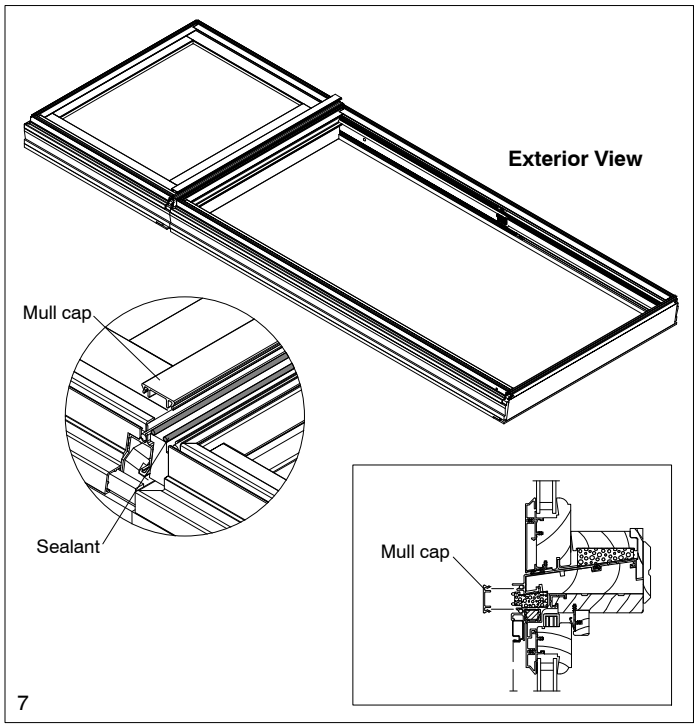

8. On operator units, replace the head jamb parting stop removed earlier.

9. Install mulled insert windows following supplied installation instructions. Interior mull trim should be applied after unit is completely installed and interior trim is applied.