Ultimate Double Hung-Single Hung Conversion and Bottom Sash Stationary Instructions

MARVIN Windows and Doors
Made for you.®

NOTE: These instructions cover techniques to convert an Ultimate Double Hung window into a single hung window. Instructions also cover the steps necessary to make the bottom sash stationary. Both kits must be ordered to make both sash stationary.

Parts Supplied with Single Hung Conversion Kit

ILLUSTRATIONS (not to scale)	DESCRIPTION AND COLOR	PART/PROFILE NUMBER
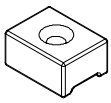	2-Sash stop	10500525
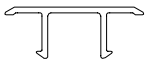	2-Jamb carrier fillers (clad units)	A216
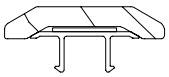	2-Jamb carrier fillers (wood units)	W2148 (attached to A216)
	2-#8 x 1″ Phillips flathead screws	11800740

YOU WILL NEED TO SUPPLY

Power driver with Phillips head bit
Power miter or hand saw
Rubber mallet
Measuring tape

Single Hung Conversion

1. Remove bottom sash (see installation instructions). Raise top sash to its fullest extent.
2. Place a sash stop beneath each of the top sash clutch assemblies located in both jamb carriers. Using a power driver, attach each stop to the jamb with one #8 x 1″ Phillips flathead screws. See illustration 1.

IMPORTANT: Make sure that the top sash is raised fully and does not lower while installing the sash stops. Lock will not function properly if top sash has lowered prior to installing sash stops.

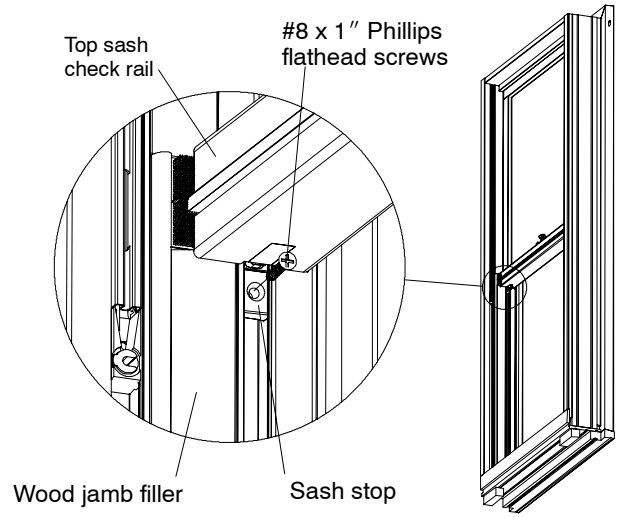

1

3. Snap the jamb carrier fillers into the exterior balance tube cavity as shown in illustration 2. For ease of installation, insert top of filler first and snap into place. Be careful not to mar the sill or top sash checkrail. Replace bottom sash (see installation instructions).

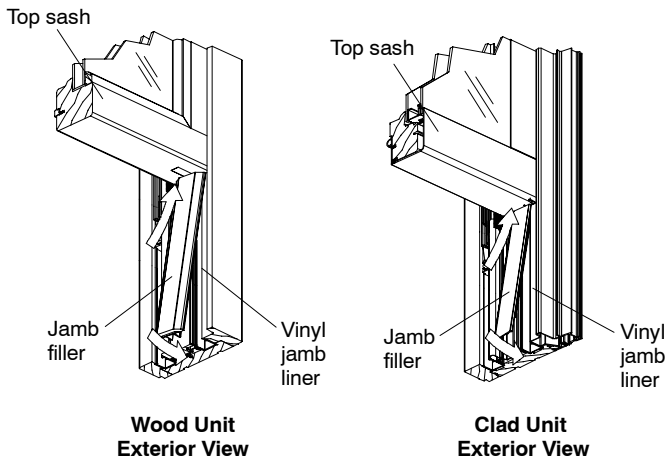

2

NOTE: On wood units with ogee lugs jambs filler will have to be cut to fit around lug.

Optional Bottom Sash Stationary

Bottom Sash Stationary Kits	
For CN 28 heights or below	11850120
For heights greater than CN 28	11850121

Parts Supplied with Bottom Sash Stationary Kit		
ILLUSTRATIONS (not to scale)	**DESCRIPTION AND COLOR**	**PART/PROFILE NUMBER**
	2–W2151 Bottom sash stationary blocks	
	32″ (813) for CN28 or below	31310130
	52″ (1321) for heights greater than CN28	31310150
	10–V784 Sash stop	10500524

YOU WILL NEED TO SUPPLY

Pencil
Power miter or hand saw
Rubber mallet
Measuring tape

1. Lock the sash.
2. Measure the distance from the head jamb to the checkrail of the bottom sash as shown in illustration 3.

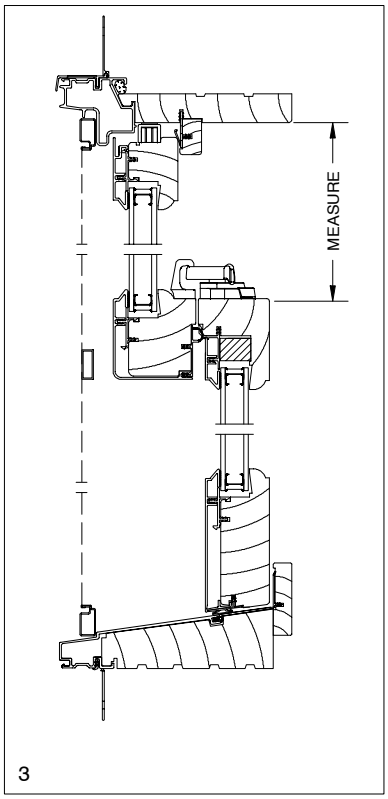

3

NOTE: Two lineal length stationary filler blocks are sent with notches on both ends. When cutting blocks, only one notched end is needed per jamb. However, these blocks must be handed (notches must fit around the head jamb parting stop). Cut blocks individually to fit around head jamb parting stop.

3. Transfer the measured length to the stationary filler blocks and cut at 90 degrees with a power miter saw or hand saw as shown in illustration 4. Some trimming may be necessary.

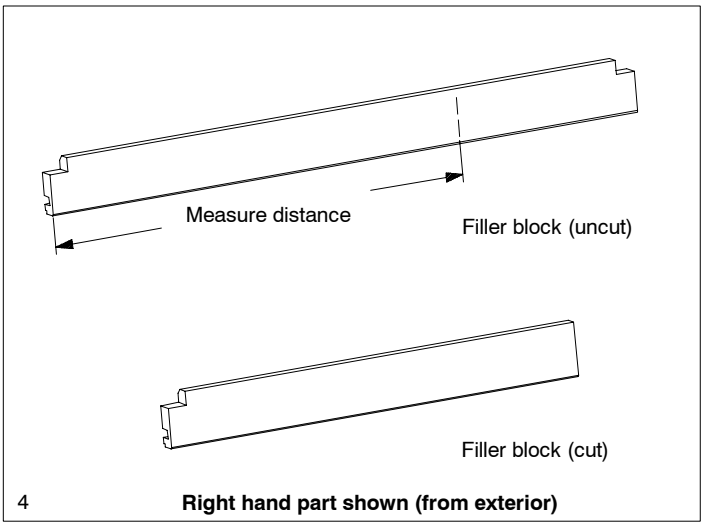

4 **Right hand part shown (from exterior)**

4. When the filler block fits properly, remove from unit and insert the vinyl sash stops at even intervals into the channel on the back of the filler blocks as shown in illustration 5.

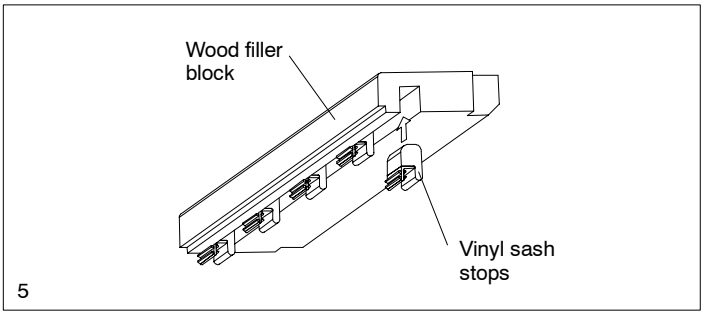

5

5. Snap filler blocks into jamb carriers. The connecting barb on the vinyl sash stops will fit between the jamb stop and the top sash balance tube. Take care not to damage bottom sash check rail and head jamb. See illustration 6.

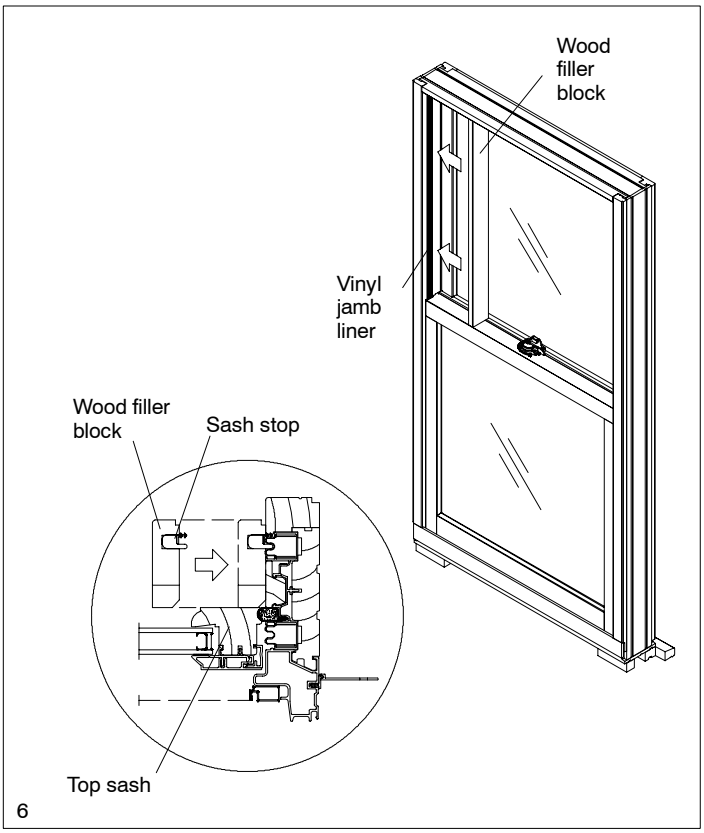

6