Clad Ultimate Double Hung
Reglazing Instructions

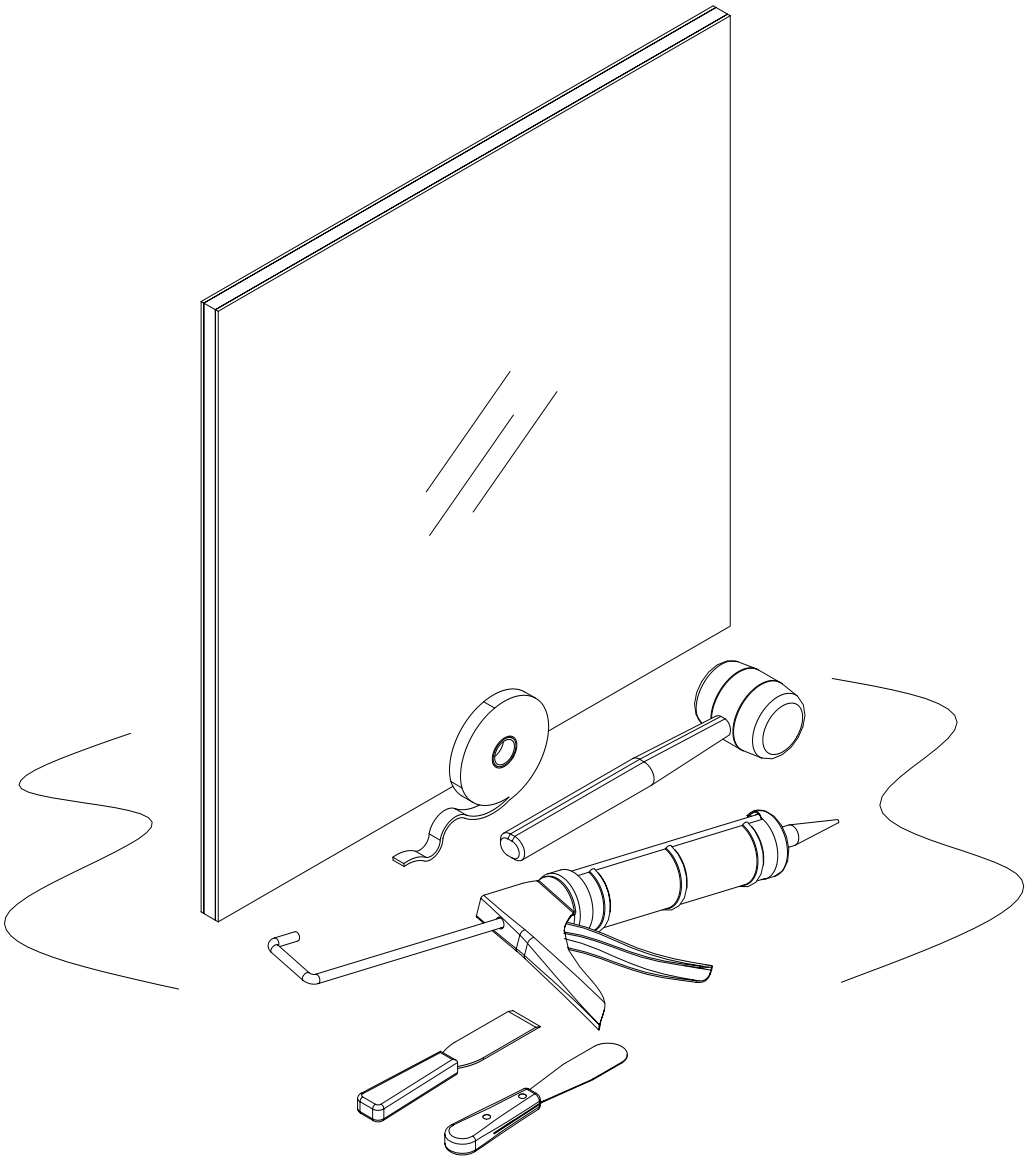

MARVIN
Windows and Doors
Made for you.®

9/16/2002
11708339

BEFORE YOU BEGIN

- Read these instructions thoroughly ***BEFORE*** beginning to reglaze your Marvin window or door product.
- Alterations to Marvin products including window films, insulating or reflective interior window treatments or additional glazings can cause excessive heat buildup and/or condensation. This may lead to premature failures not covered under warranty by Marvin Windows and Doors.
- Prior to beginning, inspect new glass for: size and type, cracks, scratches, collapse, water spots, dirt or other imperfections.
- Replacement parts listed within these instructions may be obtained by contacting your Marvin representative.

WARNING: Practice safety! Wear safety glasses or goggles and appropriate safety equipment when installing or performing adjustments to a Marvin window or door product.

ATTENTION: Specifications and technical data are subject to change without notice.

NOTE: Numbers listed in parentheses ( ) are metric equivalents in millimeters rounded to the nearest whole number.

INDEX **Page**

CUDH Operator–Glass and Cladding Removal 1
CUDH Operator–Installing New Glass 2
CUDH Operator–Sash Cladding Reassembly 2
CUDH Picture/Transom–Removing Stationary Sash from Frame 3
CUDH Picture/Transom–Installing New Glass 4
CUDH Picture/Transom–Sash Installation 5

REGLAZING CLAD ULTIMATE DOUBLE HUNG OPERATORS

STANDARD PARTS NEEDED

Replacement glass – .7” (18)
Two sided adhesive glazing tape – 1/16” (2) x 3/8” (10)

YOU WILL NEED TO SUPPLY

Safety glasses	Protective gloves
Glass handling arm guards	Pry bar
Stiff bladed putty knife	Rubber mallet
Glazing (flexible putty) knife	Utility knife
Neutral curing silicone w/gun	

GLASS AND CLADDING REMOVAL

1. Remove operator sash from unit. Place sash on a sturdy surface exterior side up.
2. Remove vinyl contact strips from sash stiles, bottom rail weatherstrip, and top check rail weatherstrip as required. See illustration 1.

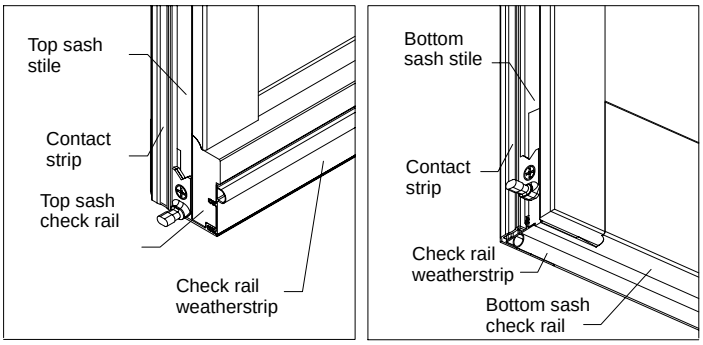

1

3. Slide a flexible putty knife between the glass and exterior cladding to loosen the glazing tape seal. More than one pass around the perimeter of glass may be necessary before the seal will separate completely. See illustration 2.
4. **Remove cladding from sash in the following sequence:**
   Top sash: Remove top rail cladding first, followed by the stiles, then check rail cladding last.
   Bottom sash: Remove the bottom rail cladding first, followed by the check rail, then stile cladding last.
   Using a stiff bladed putty knife or pry bar, insert the nose of tool between the tape and glass. Pry upward until the cladding disengages from the sash cladding clips and/or bottom check rail connector. See illustration 2.

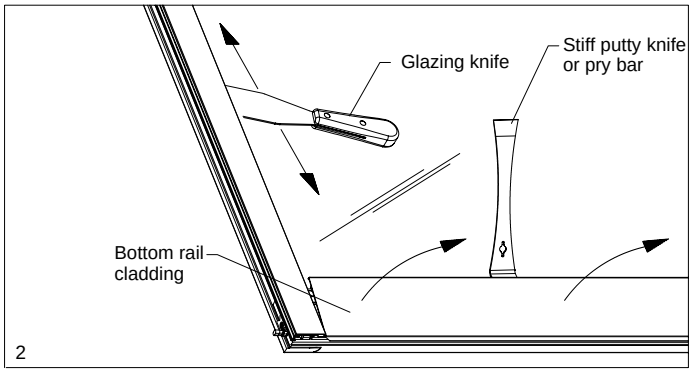

2

5. If the vinyl connector components are attached to the sash cladding remove for reuse later.
6. If applicable, remove bottom sash check rail clad connector by placing a stiff bladed putty knife or pry bar between sash and component. Pry upward to remove from kerf. See illustration 3.

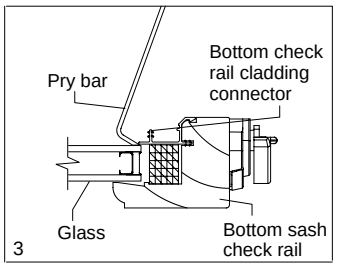

3

7. Turn sash over. Slide a flexible putty knife between the glass and interior wood frame to loosen the silicone seal. See illustration 4.

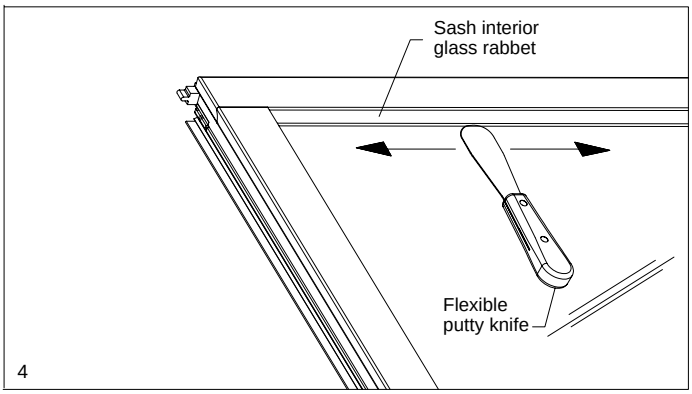

4

8. Carefully remove glass from sash frame. Note location of setting blocks, remove and set aside for reuse later.
9. Scrape any excess silicone from wood frame and excess glazing tape from clad components.

INSTALLING NEW GLASS

10. Place a 1/8”–3/16” (3–5) continuous bead of silicone centered on the interior glazing rabbet of the wood frame. See illustration 5. Avoid excess application of sealant.

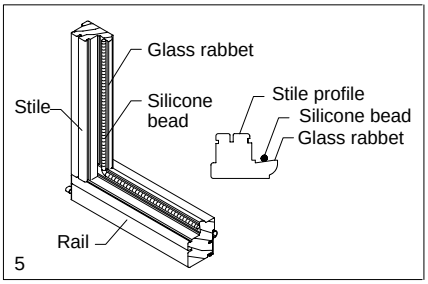

11. Place glass into frame. Place setting blocks into position. Glass must be blocked on bottom rail and at least one side at quarter points.
12. Press glass into frame at edges to position and ensure a proper seal.
13. Examine the check rail cord cavity for silicone that may be in contact with the cord or end plate assembly components. Remove immediately as excess silicone will hamper operation of the sash. See illustration 6.

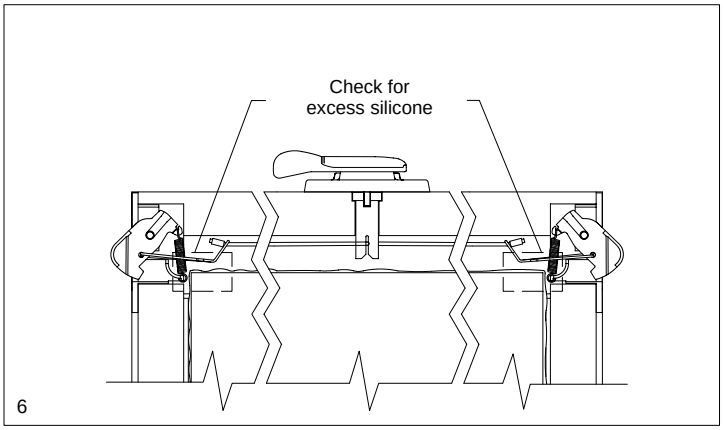

14. Replace cladding connectors and, if applicable, replace the bottom sash check rail vinyl connector by snapping into place.

SASH CLADDING REASSEMBLY

15. Apply two sided glazing tape to edges of clad components the length of rails and stiles. Leave the protective backing on tape at this time. Make sure corners are cut squarely where cladding component joints meet. See illustration 7.

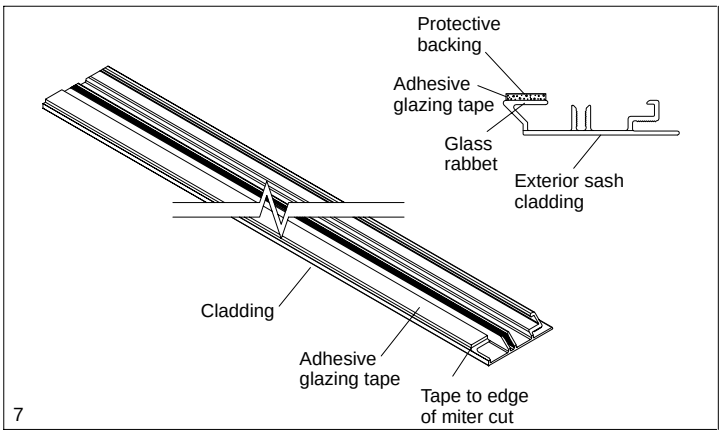

IMPORTANT: Before assembling the metal components on the glass surface the following sequences must be followed:

Top sash: Reinstall the check rail first, followed by the stiles, then the top rail last.

Bottom sash: Reinstall the stiles first, followed by the check rail, and bottom rail last.

16. Fold the ends of the protective backing on the glazing tape back slightly leaving 1”–2” (25–51) of the glazing tape visible when removed. See illustration 8.
17. Following the sequence outlined above, apply clad component to sash by hooking on clad connector as shown in illustration 8. Rotate cladding until it rests on glass. DO NOT press down into glass yet.

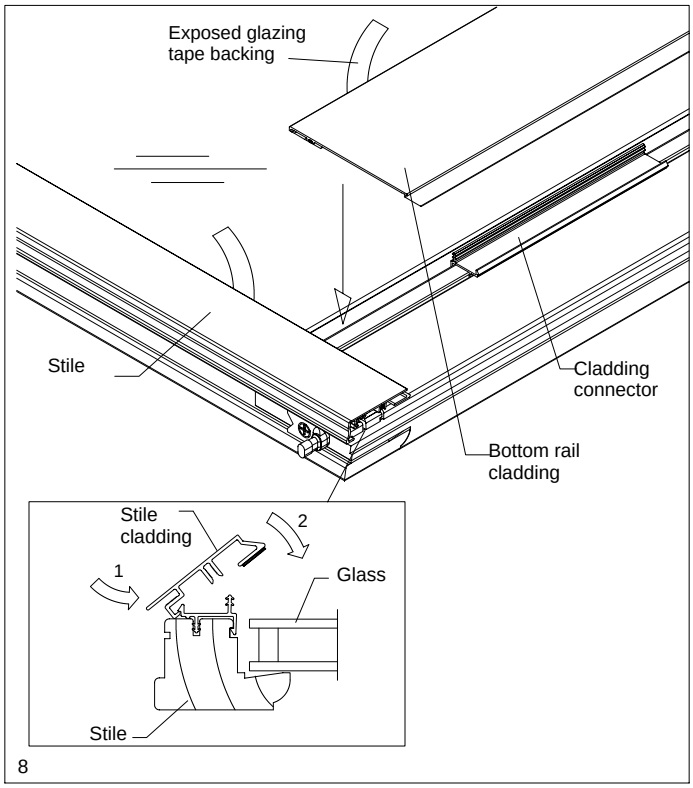

18. When you are sure of the position of clad component grasp tails from tape and carefully remove. See illustration 9. Push clad component firmly onto the glass and proceed to next clad component. It may be necessary to use a rubber mallet to seat the cladding components properly. Proceed to next clad component and repeat steps 16–18.

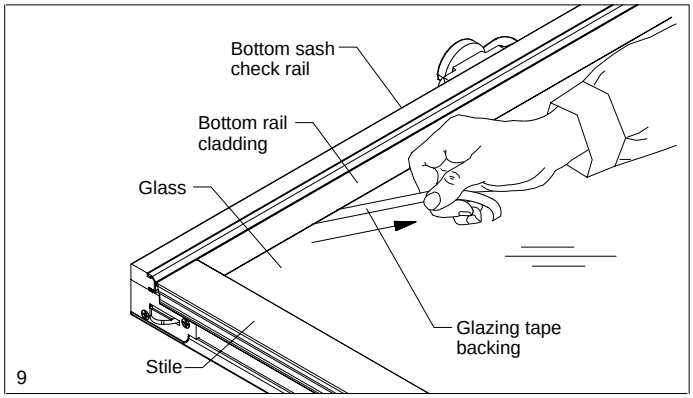

19. Reinstall sash into unit.

NOTE: Do not clean excess silicone sealant from glass until fully cured (at least 24 hours). Once cured, cut away excess silicone with a utility knife. Be careful not to score glass.

REGLAZING CLAD ULTIMATE DOUBLE HUNG PICTURE/TRANSOM UNITS

IMPORTANT: These instructions serve two purposes, reglazing and sash installation. You may find that your new Clad Ultimate Double Hung Picture unit frame and sash were shipped loose due to size, therefore it will be necessary to install in the field. Refer to Steps 21 and 22 of these instructions. If you only use these instructions for field installation of the sash, we ask that you please retain them for future usage.

STANDARD PARTS NEEDED

Replacement glass – 1" (25)
Replacement V1297 weatherstrip
Replacement V130 sash retainers
Two sided adhesive glazing tape – 1/16" (2) x 3/8" (10)
Replacement V946 sash clad connectors

YOU WILL NEED TO SUPPLY

Safety glasses	Utility knife
Glass handling gloves	Glass handling armguards
Rubber mallet	Stiff putty knife or pry bar
Glazing (flexible putty) knife	Linoleum knife
Neutral curing silicone w/gun	

REMOVING STATIONARY SASH FROM FRAME

1. Begin by removing the wood sash stops with a stiff putty knife as shown in illustration 1. Start with the head jamb, followed by the stiles. Note: If the wood sash stop connecting barb(s) remain(s) in the frame kerf it will be necessary to remove. Exercise care in removing the connecting barb(s) from the frame kerf as it will be reused. Reinstall into sash stop. Transoms will also require the removal of the sill filler and foam before sash can be removed from the frame. See illustration 1.

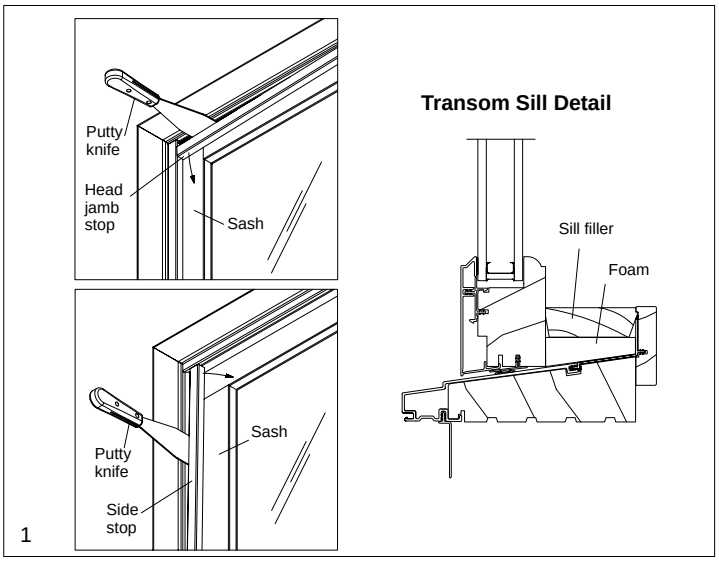

1

2. Using the linoleum knife, cut the vinyl retainers securing the sash to the frame. Start with the head jamb and then move to the jambs. See illustration 2.

NOTE: When removing the heavy sash from the frame it is very important to have the assistance of another individual. Be very careful of broken glass.

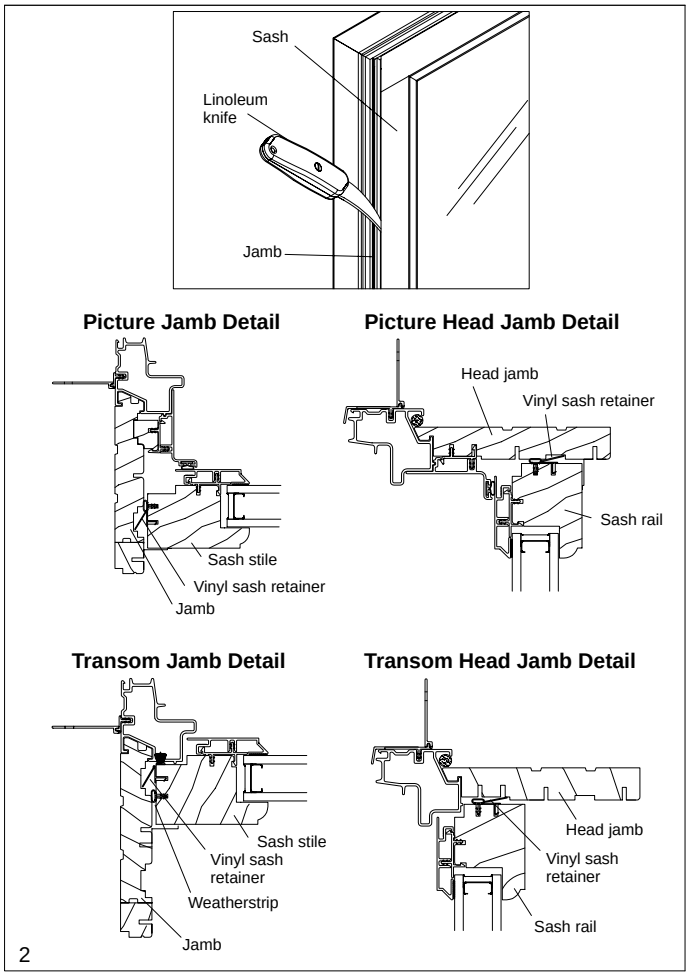

2

3. Pry the sash out of the frame using the stiff putty knife. Grasp the sash and lift out of the frame.

4. Place picture or transom sash on a flat surface with the interior of the sash up (cladding facing down).

5. Remove vinyl retainers and weatherstrip from the sash perimeter. Save bottom rail weatherstrip for use later. Discard all others. See illustration 3.

6. Before attempting this next step, make sure you have your glass gloves and arm guards on. Slide the flexible putty knife between the glass rabbet and glass. Push knife around the perimeter of the glass to loosen the silicone. See illustration 3.

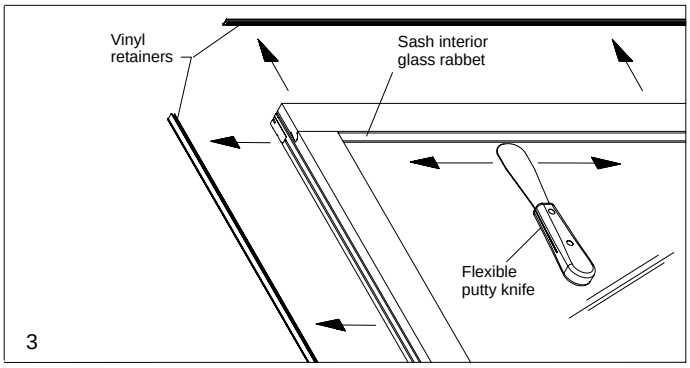

3

7. Turn the sash over. Now slide the silicone glazing knife between glass and exterior cladding. Push knife around the perimeter of the glass to loosen the tape. See illustration 4.

NOTE: Cladding component removal must be accomplished in the following sequence: Top and bottom rail, followed by stiles.

8. Using a putty knife or pry bar, insert the nose between the tape and the glass and pry upward until the metal cladding disengages from the sash cladding connector. Follow the appropriate sequence described earlier. See illustration 4.

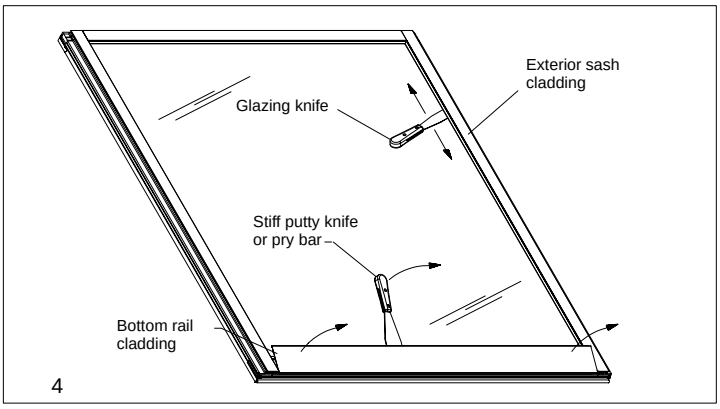

4

9. Remove sash clad connectors and discard.
10. Carefully remove the broken or damaged glass. Make sure you note the location of the setting blocks as they will be reused.
11. Scrape the silicone from the glazing rabbet and glazing tape residue from the clad components.

INSTALLING NEW GLASS

12. Apply the two sided glazing tape to the metal components along the length of the rails and stiles. Trim to proper length. Leave the protective tape covering on the glass surface side at this time. Make sure the tape is cut to proper length and square at the corners where the joints will meet. See illustration 5.

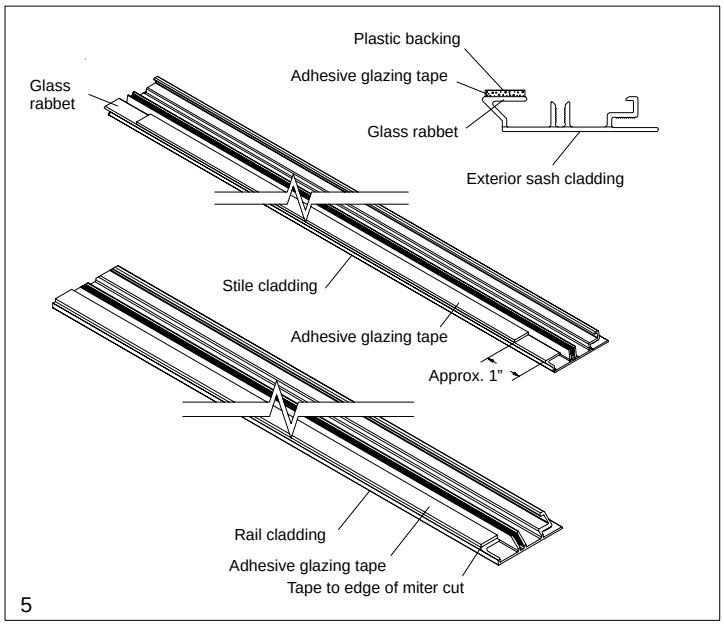

5

13. Place a continuous bead of silicone centered on the interior glazing rabbet of the wood sash. Avoid excess application of silicone sealant. See illustration 6.

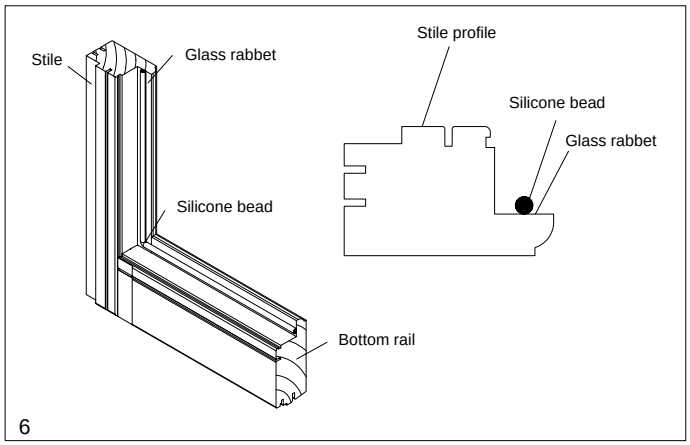

6

14. Reposition setting blocks to their original locations. Using an assistant, place glass in sash ensuring the glass surface is oriented as described above.
15. Press glass firmly into silicone bed around perimeter.
16. Cut the sash clad connectors 2″ less in length than the overall stile or rail length measurement. Press connectors into kerf around sash perimeter as shown in illustration 7.

NOTE: Before reassembling the metal components on the glass surface, the following sequences must be followed – Start with the stiles, then bottom rail and top rail.

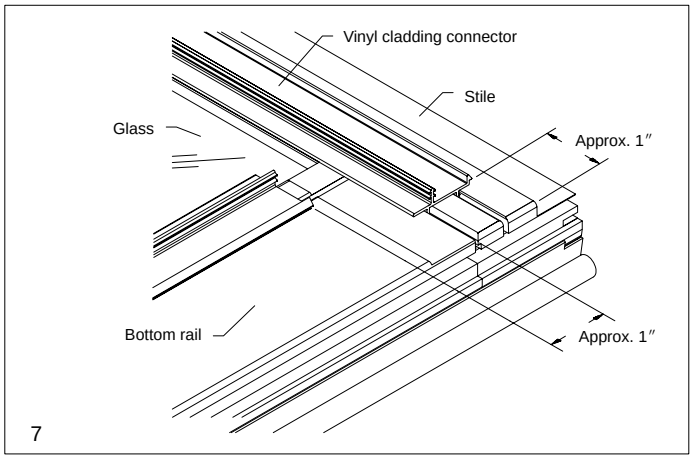

7

17. Fold the ends of the protective glazing tape backing slightly toward the daylight opening leaving 1″ – 2″ (25–51) visible when applied. Apply the metal components to the sash following the sequence mentioned previously, do not push all the way down yet. When you are sure of the correct position, grasp the tails of the tape and pull as shown to remove. Push the clad components down firmly on the glass. See illustration 8.

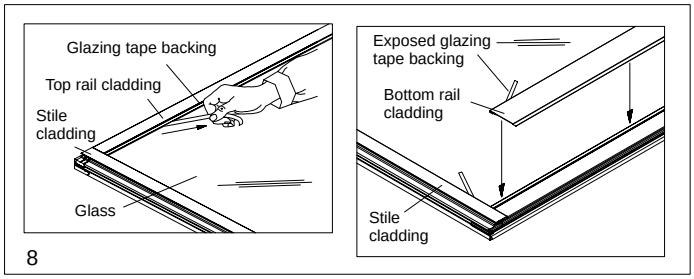

8

18. It may be necessary to use a rubber mallet to seat the cladding components properly.

19. Cut new vinyl retainers and sash weatherstrip to length. Apply to corresponding kerfs of sash stiles and top rails as shown in illustration 9.

20. Replace bottom rail weatherstrip. See illustration 9.

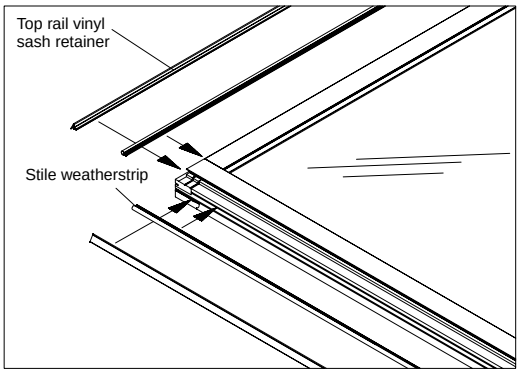

Vertical Picture Sash Detail

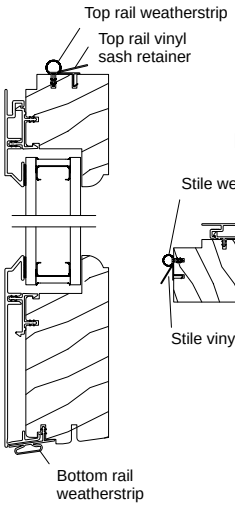

Horizontal Picture Sash Detail

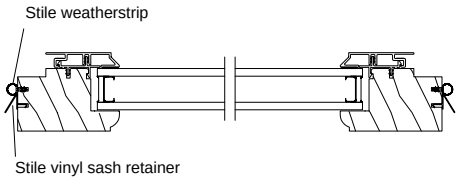

IMPORTANT: Apply transom stile sash retainer to kerf nearest the cladding. The transom top rail sash retainer will be applied to the kerf nearest the interior sash surface. This only applies to transom units.

Vertical Transom Sash Detail

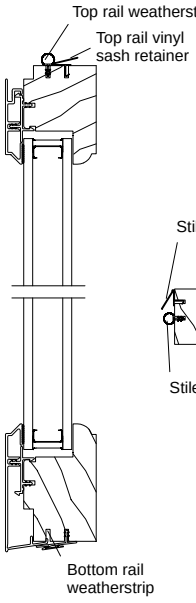

Horizontal Transom Sash Detail

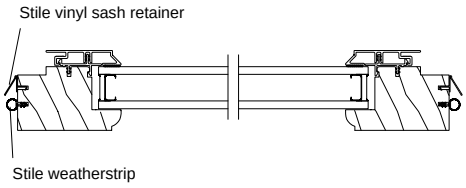

9

SASH INSTALLATION

21. Using an assistant, place the sash into the frame and press firmly into place as shown in illustration 10.

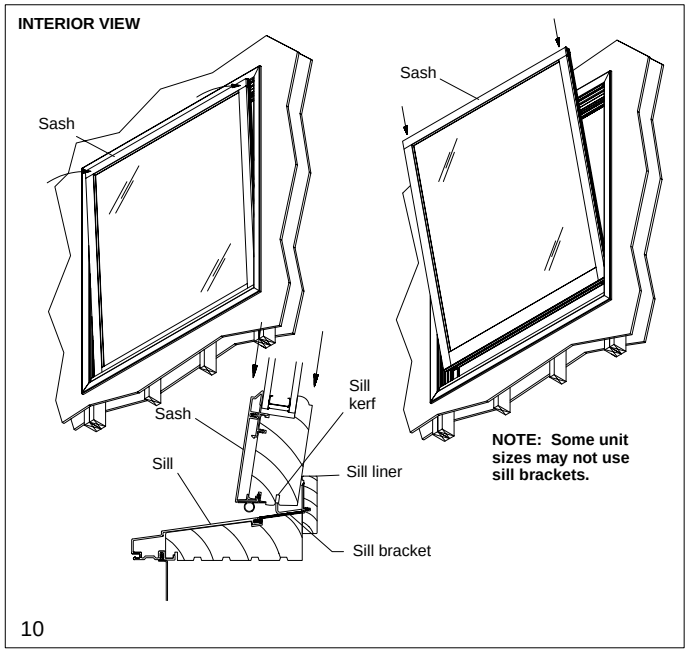

10

22. Replace the sash stops with the attached connecting barbs to frame. Start with the jambs first and then do the head jamb. See illustration 11.

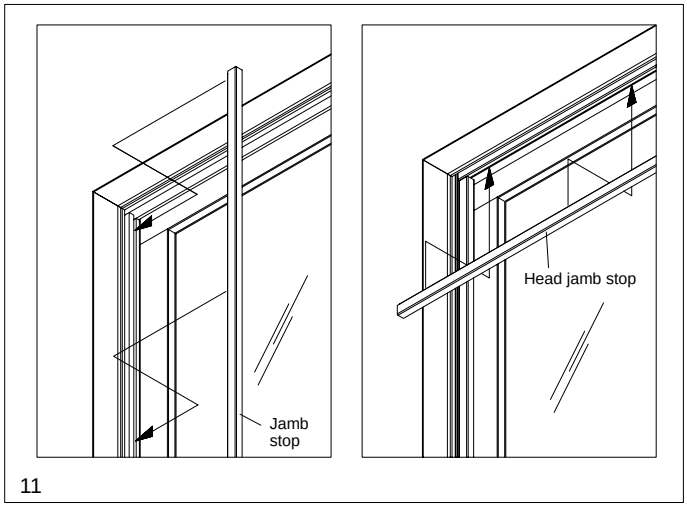

11