# Clad Trimline Patio Door

## Installation and Finishing Instructions

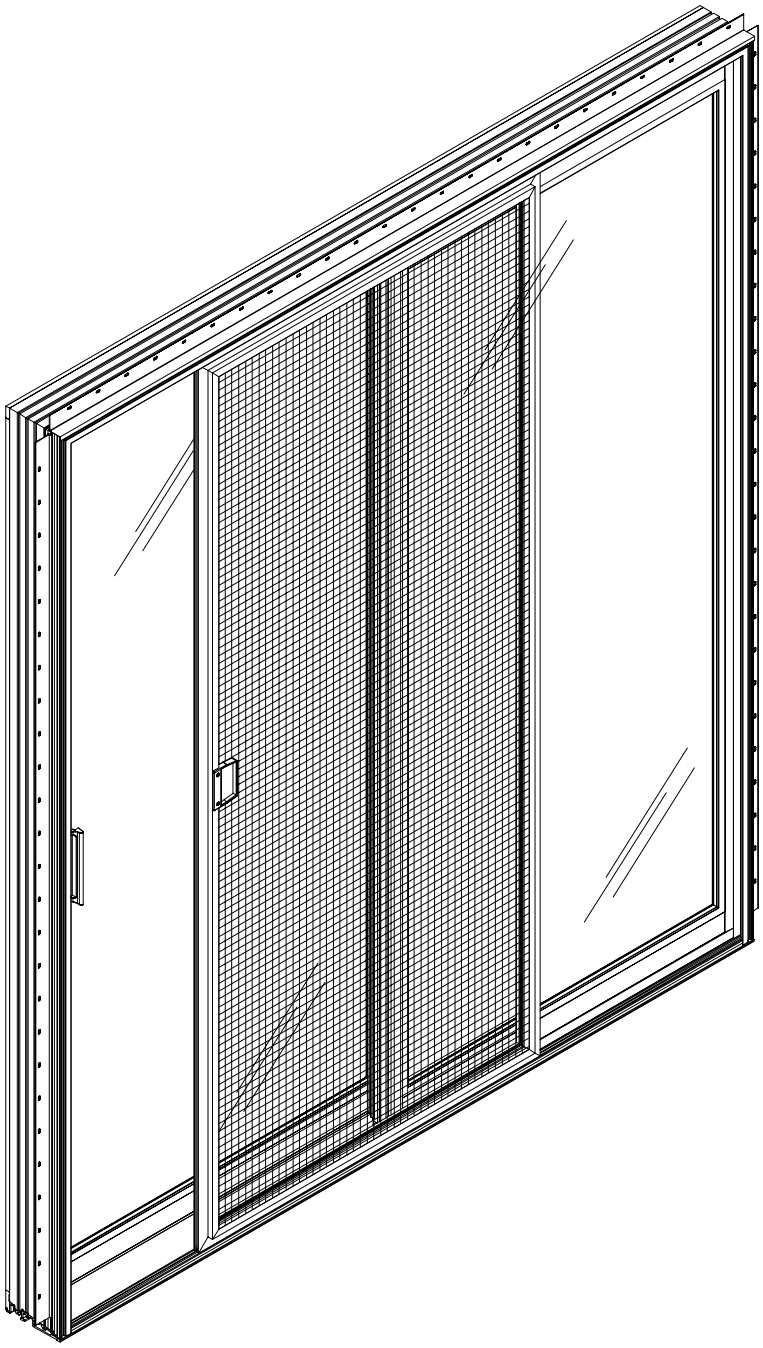

MARVIN
Windows and Doors
Made for you.®

4/25/2001
19970636

## BEFORE YOU BEGIN

- Read these instructions thoroughly ***BEFORE*** beginning to install your Marvin window or door product.
- Regional standard practices, environmental conditions and codes may vary. Identify and follow local regulations and standard practices when they exceed the enclosed procedures. The responsibility for compliance is yours; the installer, inspector and owner(s).
- Plan sizing of rough opening and clearance from exterior finishing systems to allow for normal materials shrinkage or shifting. (e.g. wood structure with brick veneer; allow adequate clearance at sill.) Failure to do so can void the Marvin warranty coverage.
- All windows and doors must be properly flashed and/or sealed at exterior perimeter. Materials used must meet all codes and be compatible with building exterior and window/door surfaces.
- It is the responsibility of the builder, installer and subcontractors to protect the interior and exterior of windows/doors from excessive contact with harsh chemical washes, construction material contamination and moisture. Damage to glazing, hardware, weatherstrip and cladding/wood can occur. Protect with painters tape and/or protective sheathing as required. Follow all guidelines regarding material use, preparation, personal safety and disposal.
- Alterations to Marvin products including window films, insulating or reflective interior window treatments or additional glazings can cause excessive heat buildup and/or condensation. This may lead to premature failures not covered under warranty by Marvin Windows and Doors.
- When preparing to finish the exterior of wood windows and doors fill all nail holes and staple holes with wood filler. Follow all guidelines enclosed (after warranty) and by others (from materials used) to prepare and finish.

**CAUTION: This door is glazed with tempered glass and if broken must be replaced with tempered glass. This is in accordance with state and federal laws.**

**CAUTION: Marvin Windows and Doors recommends special care be taken when mulling a transom above the clad Trimline Patio Door. Transom installation may require additional support that allows unaffected door operation. Contact your Marvin distributor for additional information.**

**WARNING: Practice safety! Wear safety glasses or goggles and appropriate hearing protection when installing or performing adjustments to a Marvin window or door product.**

### *NOTE TO THE INSTALLER AND SUBCONTRACTORS:*

Always provide a copy of these instructions to the current (or future) building owner.

Failure to follow the above recommendations and any other specific warnings, procedures for use, safety recommendations and standard construction practices can result in personal injury, poor product performance, premature failure and unnecessary call backs.

Contact your Marvin supplier if you have any questions regarding product and materials used in manufacturing. Before purchasing or applying any product that may affect the installation or performance of Marvin windows and doors contact the manufacturer of aftermarket product/glazings that are not supplied by Marvin and request written product use, associated warranties and damage coverage. Provide this information and warranties to the end user and/or building owner for future reference.

**Thank you for your time and attention to detail. Questions? Contact your Marvin dealer or visit us at www.marvin.com.**

### REPLACEMENT PARTS

If replacement of parts becomes necessary, please contact your local Marvin Windows and Doors dealer. Whenever possible, provide a part/profile number.

### STANDARD PARTS SHIPPED WITH UNIT

| ILLUSTRATIONS (not to scale) | DESCRIPTION AND COLOR | |
|---|---|---|
| 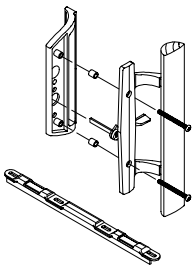 | Trimline Patio Door non–keyed handle package consisting of exterior handle, strike, gaskets, interior handle and screws.<br>Color: Beige with wood insert on interior. | 10150032 |
| 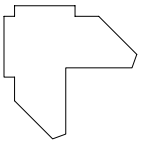 | Nailing Fin corner gasket | 11869515 |

### YOU WILL NEED TO SUPPLY

| | |
|---|---|
| Safety glasses | Hearing protection |
| Level (4′–6′) | Square |
| Phillips screwdriver | Flat screwdriver |
| Tape measure | Hammer |
| Interior trim | Wood shims |
| Fiberglass insulation | 2″ roofing nails |

APA rated AFG–01 spec. sealant/adhesive (for sill)
Flashing or adhesive backed flashing
Grade NS Class 25 sealant per ASTM C920. Sealant must be compatible with building exterior and window/door surfaces
#8 x 2″ flathead wood screws (for optional installation brackets)

*NOTE: Numbers listed in parentheses ( ) are metric equivalents in millimeters rounded to the nearest whole number.*

***ATTENTION: Specifications and technical data are subject to change without notice.***

### INDEX


| | Page |
|---|---|
| Installing Trimline Patio Door | 2 |
| Installing the Handle | 6 |
| Installing the Screen | 7 |
| Removing Operating Panel | 8 |

## TRIMLINE PATIO DOOR INSTALLATION INSTRUCTIONS

1. The rough opening should be 1″ (25) wider than the outside measurement of the frame and 1/2″ (13) higher. Masonry openings should be 1/2″ wider and 1/4″ (6) higher than the outside measurement of the exterior of the unit and if applied, casing. ***When framing rough opening, care should be taken to ensure the sill plate is level, opening is square, straight and plumb.*** See illustrations 1A and 1B.

**IMPORTANT:** If the previous conditions are not met, corrective measures must be taken to alter the opening(s) before proceeding. It is also essential that the sheathing behind the nailing fin be a solid surface to ensure the unit is secured firmly to the wall.

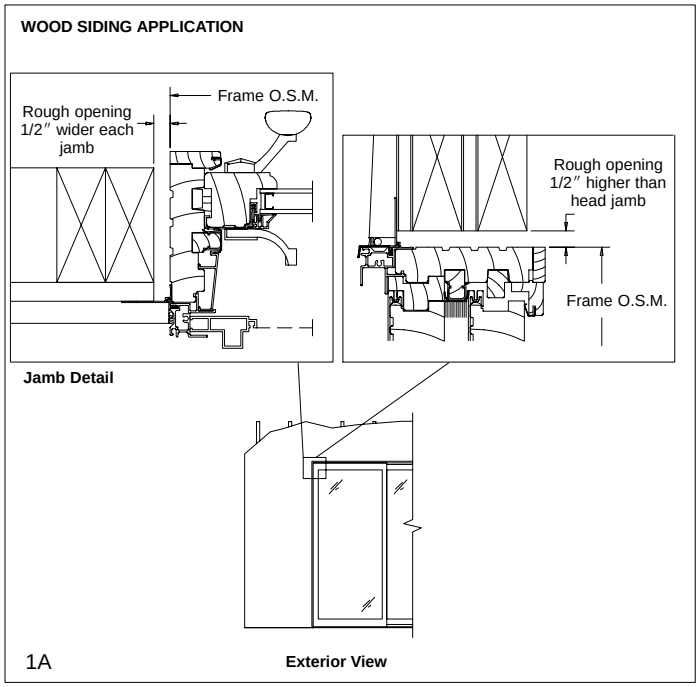

1A

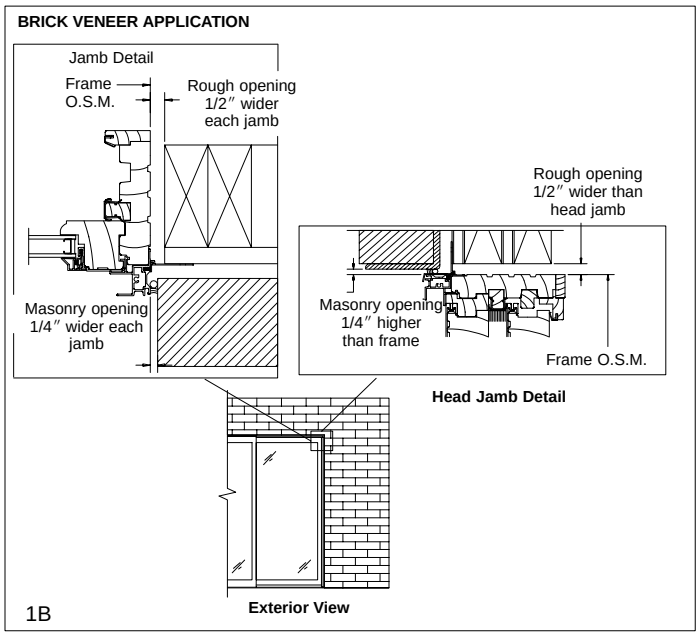

1B

2. For proper performance and operation, bottom of the rough opening must be level and flat. See illustration 2.

**IMPORTANT:** This step is crucial to obtain a trouble free installation.

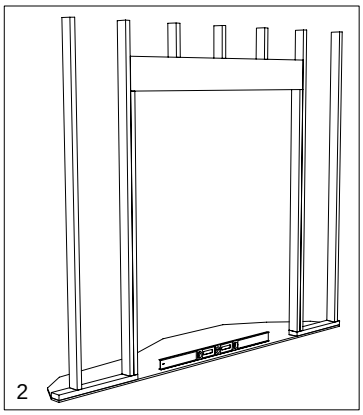
2

## ROUGH OPENING PREPARATION

3. If utilizing a continuous air barrier system, it is recommended that doors are installed after application. When trimming away at rough openings, first cut across head jamb and sill as shown in illustration 3. Then cut vertically at center of rough opening. **DO NOT cut air barrier diagonally from corner to corner ("x").**

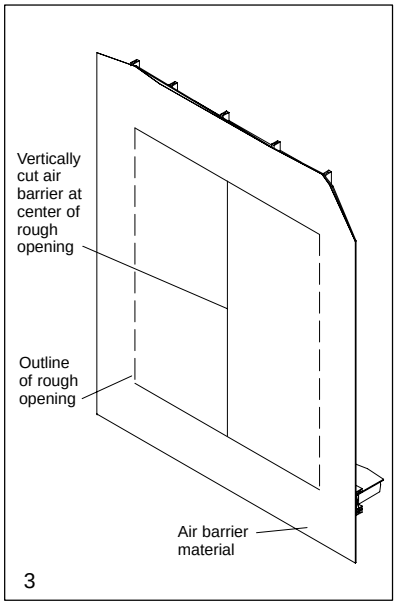

3

4. Wrap barrier to interior, trim and allow at least 2″ (51) to extend inside, tack in place. (Do not tack barrier at head jamb. This must be kept loose to allow the head jamb nailing fin/drip cap to fit underneath). See illustration 4.

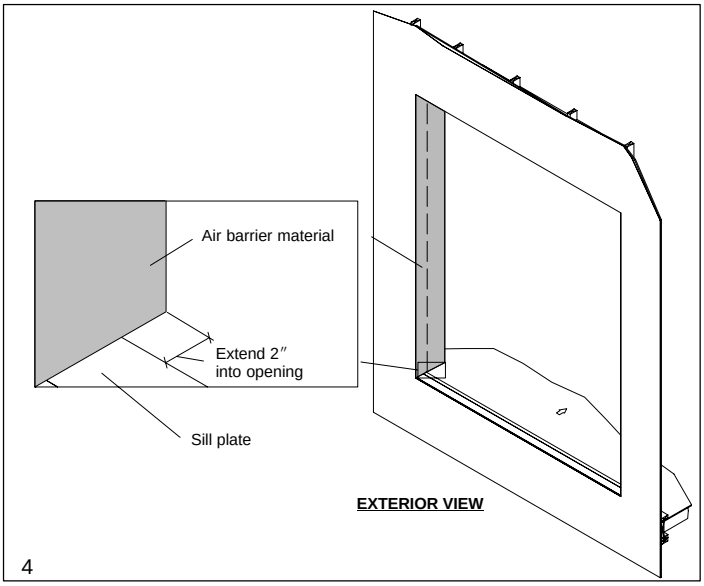

4

*NOTE: If using building paper on structure apply after doors are installed. Steps outlined below apply to both air barrier and building paper applications. For building paper applications install flashing directly on exterior sheathing.*

5. Properly flash and pan rough opening sill.

*NOTE: If metal or PVC pan flashing is to be used, install now.*

6. If applicable cut air barrier at top corners diagonally away from opening. Fold up to expose sheathing below, tack up temporarily. Cut a 13″(330) piece of air barrier material or, if applicable, Grade "D" building paper 24″ longer than the rough opening height. *NOTE: Adjust material width for wall thickness.* Cut material as shown in illustration 5. Fold and install side flashing to cover the rough opening jamb and fold out onto the exterior. Staple in place. See illustration 5.

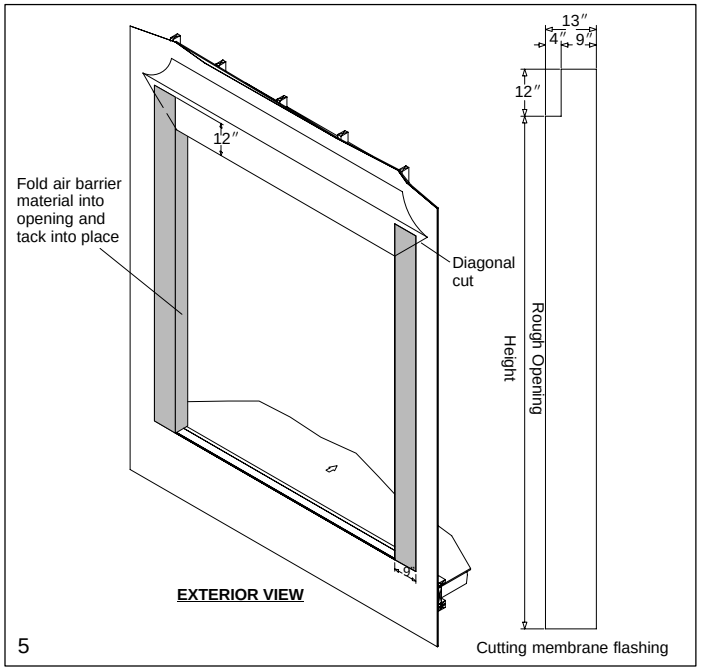

5

7. Remove plastic and cardboard from frame perimeter. Remove the wood block and shipping screw installed through the jamb into the stationary panel. See illustration 6.

**IMPORTANT:** If this screw is not removed, the door will not be reversible.

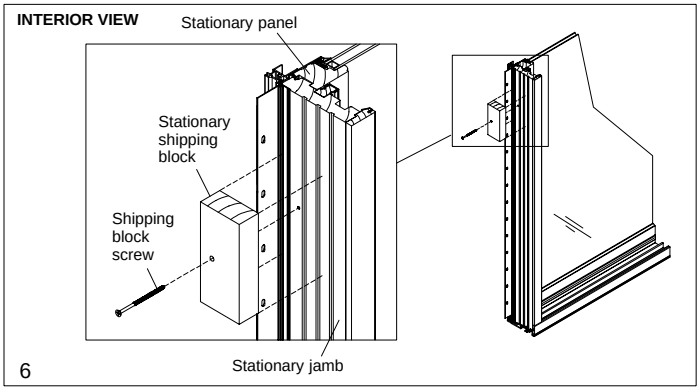

6

## INSTALLING UNIT

8. Position the factory applied nailing fin upright for installation following the instructions provided. **DO NOT** apply nailing fin corner gaskets at this time.

9. Apply a minimum of two 1/4″ (6) beads of APA rated AFG–01 spec. sealant/adhesive across the entire width of the opening. Position the beads so they will contact the flat portion of the bottom of the sill when the door is placed in the opening. See illustration 7.

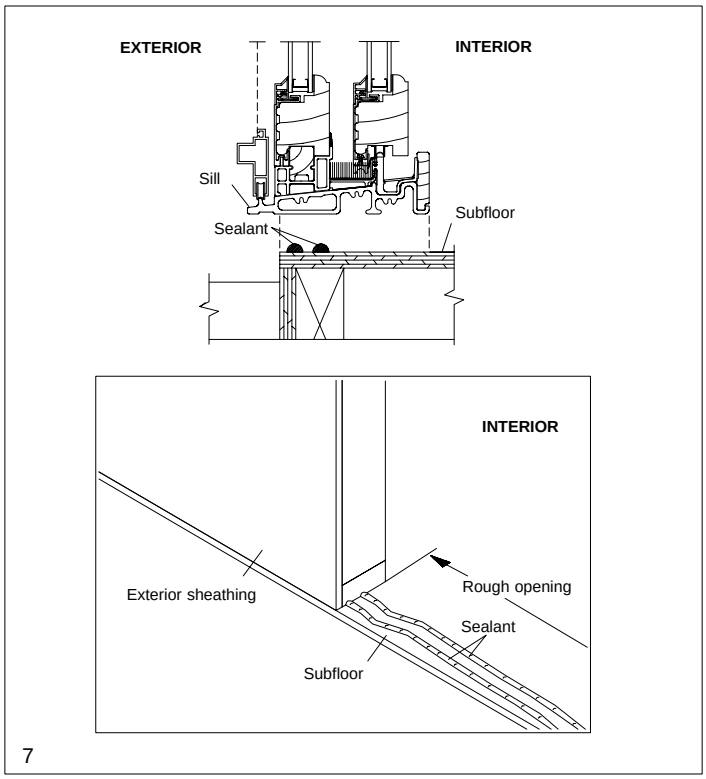

7

10. Tip door frame into opening and center it. Temporarily nail an upper corner of the nailing fin with a 2″ roofing nail or secure the upper corner of an installation bracket* to the interior studs. Do not drive the nail all the way in. See illustration 8.

* Specific installation instructions are supplied with the product.

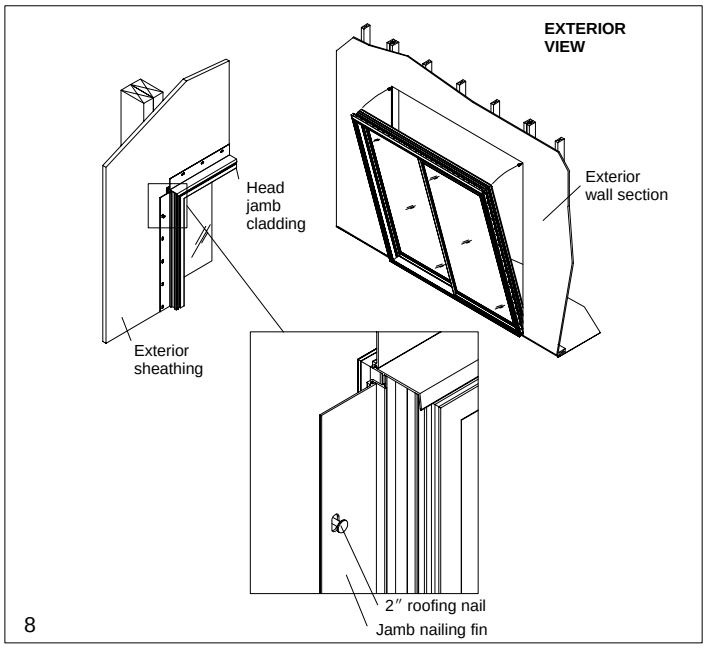

8

11. Before the sealant/adhesive is allowed to set up, ensure the jambs are straight and plumb, and the sill is level. Also recheck the sill to ensure it is straight, press into the sealant/adhesive if uneven. It is also important to plumb vertically interior to exterior at side jambs. See illustration 9.

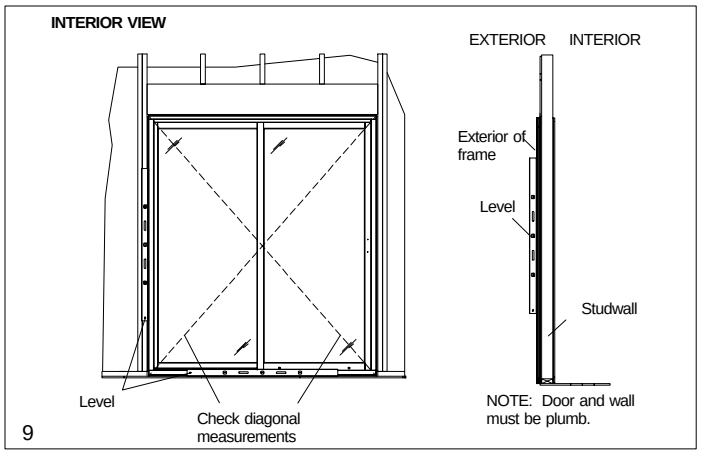


12. Check diagonal measurements for the entire frame. Adjust as necessary by applying shims to the corners 4″ (102) to 6″ (152) from the sill and head jamb. See illustration 10.

*NOTE: Proper shimming is extremely important. Under or over shimming will result in bowed jambs and/or head jamb. Both conditions can contribute to improper operation of door panels.*

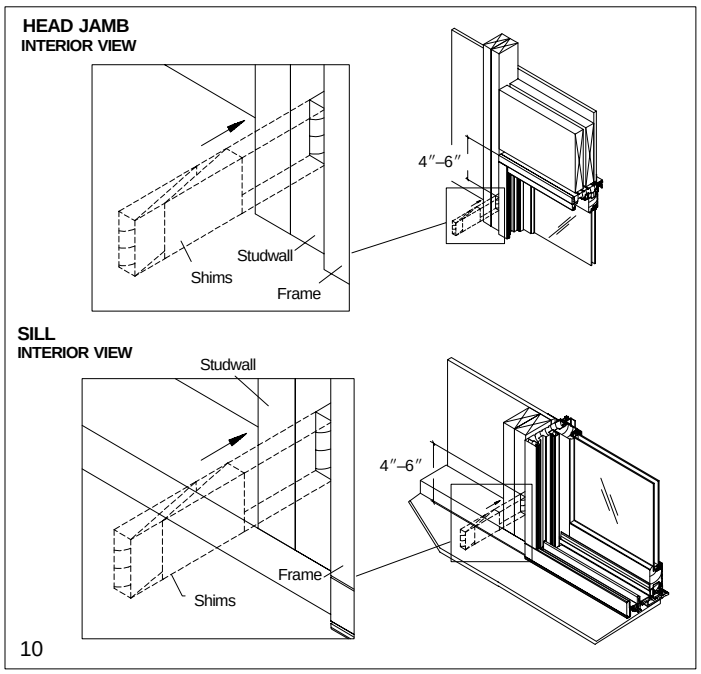


## PERMANENTLY SECURING UNIT

13. When the unit is level, square and plumb, install shims between the frame and opening within 4″ – 6″ (102 – 152) of the sill and on each side of the top corners (if not previously done in step 9). Insert shims along the side and head jambs every 12″ – 14″ (305 – 356) between the corner shims, fasten all shims in place. See illustration 11.

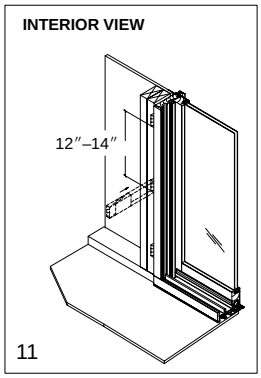


14. Recheck to ensure the unit is square and jambs are straight. Permanently secure unit by nailing corners of nailing fin with 2″ galvanized roofing nails or by attaching installation brackets to studs with #8 x 2″ flathead wood screws. Fasten remainder of nailing fin with 2″ galvanized roofing nails in nailing fin every 7″ (178) along the jambs and head jamb. See illustration 12.

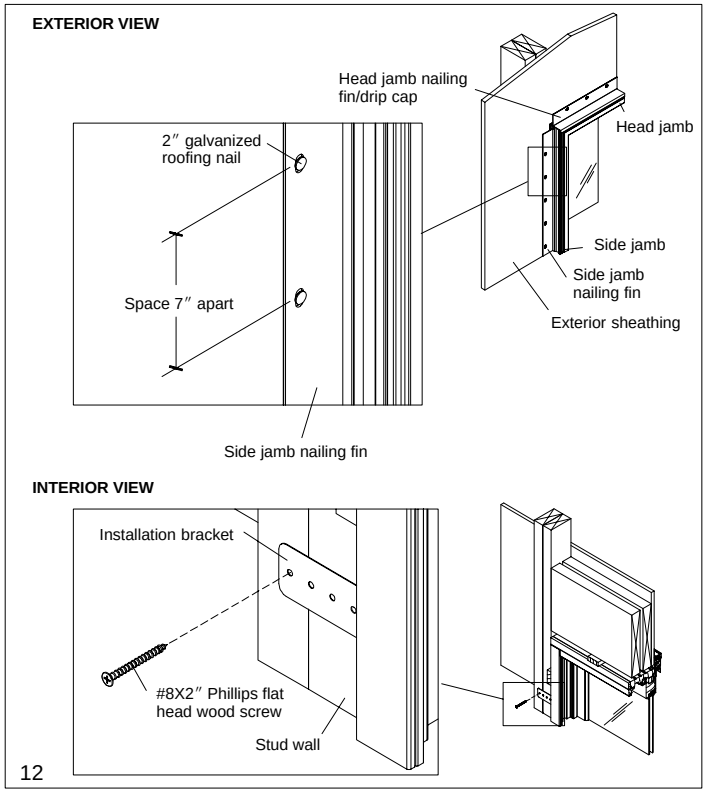


## SEALING THE INSTALLATION

15. Apply nailing fin corner gaskets to each corner of the nailing fin. Apply sealant along each nailing fin corner gasket as shown in illustration 15. (Units with clad casing do not use corner gaskets).

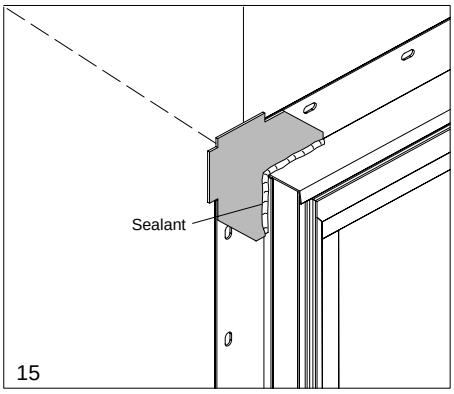


*NOTE: Units installed without nailing fin/ drip cap or units with clad casing must have a drip cap installed along the head jamb or head jamb casing at this time (available from Marvin or supplied by others).*

**IMPORTANT:** Clad nailing fin is not designed to be a weatherproof flashing.

16. If utilizing air barrier material skip this step and proceed to step 19. For building paper applications, tuck a double ply layer of building paper under sill flashing. At the jambs, install a double ply roll so that it laps over the nailing fin and abuts the door jamb overlapping the previous course by at least 2″. Continue installing courses beyond the height of the door unit as shown. See illustration 16.

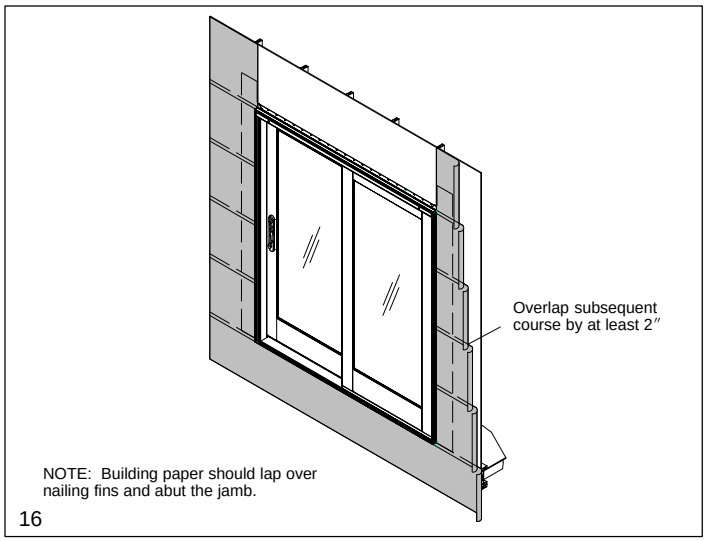


17. Lap vertical strips of self sealing adhesive membrane onto unit jambs and over the air barrier material or building paper. Make small cuts at head jamb to allow membrane to fold back onto exterior. See illustration 17.

18. Install another layer of adhesive membrane lapping onto head jamb of unit and over nailing fin and exterior sheathing. Membrane flashing at head jamb should extend and cover flashing membrane previously installed at jambs. See illustration 17.

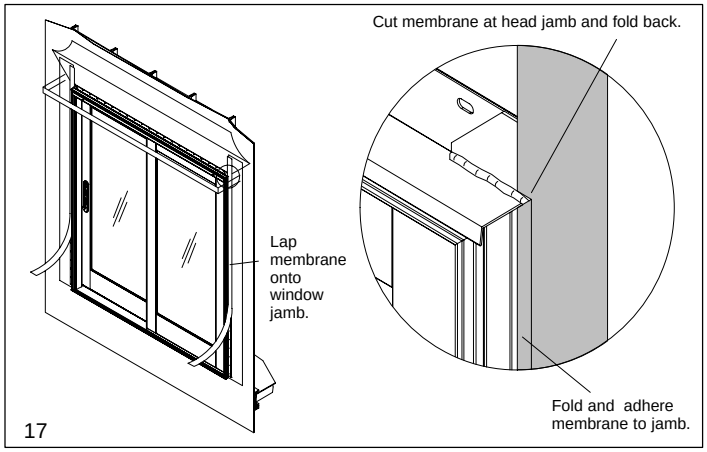


19. For building paper applications, proceed to step 22. For air barrier applications fold head jamb air barrier material down over head jamb flashing membrane. Apply seam seal tape over diagonal cut in air barrier. Make sure tape laps onto unit. Tape and seal any seams and fasteners directly above the unit. See illustration 18.

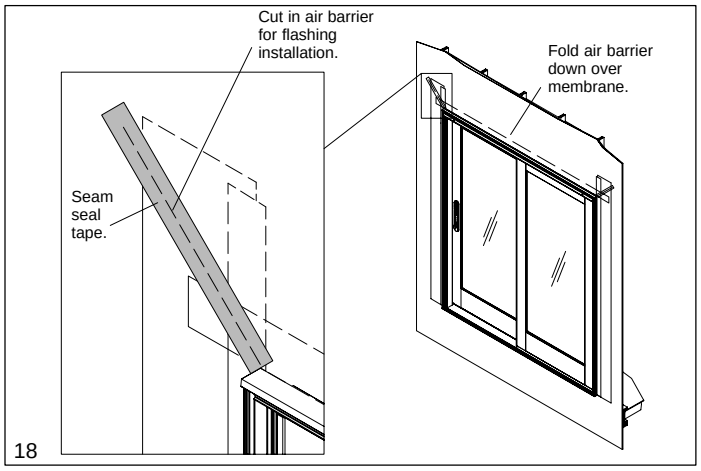


20. If utilizing air barrier material skip this step and proceed to step 23. For building paper applications, size and cut the double roll of building paper to bridge over the opening between the building paper at the sides. This course should extend past the paper previously installed by at least 6″ See illustration 19.

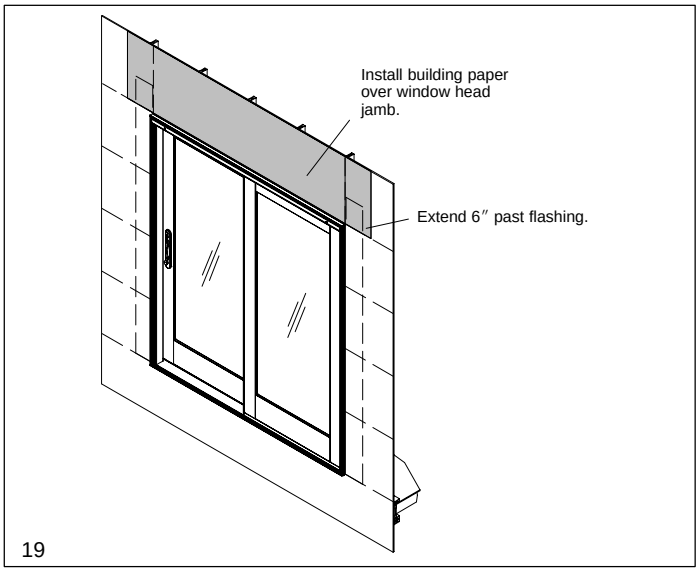


21. If required, sealant can be applied around the perimeter of the frame to form a weather tight barrier. As needed, insert backing material (i.e. foam backing rod) between the clad frame and structure to provide support for sealant. See illustration 20.
In all cases, apply a generous amount of caulking along the underside of the sill. See sealant manufacturer's recommendations for preparation and application.

**IMPORTANT:** Perimeter sealant must be Grade NS Class 25 per ASTM C920 and compatible with both the window/door product and the finished exterior(s) of the building or water and air infiltration resulting from sealant failure will occur.

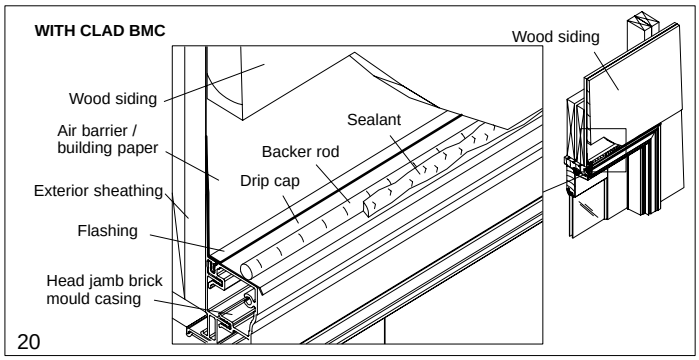


22. Trim all shim material even with the interior of the structure.

23. Fill gaps between frame and rough opening members on interior with fiberglass insulation. Do not pack tightly.

*NOTE: As required by some building codes, foam type insulation may be used to form an infiltration seal. Important, a low expansion type foam should be used in combination with fiberglass insulation. Apply from interior against casing/nailing fin back side 1″–2″ (25–51) thick (or as required by code). Follow all instructions and warnings from foam manufacturer.*

**CAUTION: When using expanding foam insulation it is very important not to bow the head jamb and/or side jambs of the unit.**

## FINAL INSTALLATION PROCEDURES

24. To remove the operating panel shipping blocks located at head jamb and sill, remove screw from head jamb block near interlock stile. Slide the operating panel open to expose and remove sill shipping blocks on each end of the bottom rail. Check the operation of the door to see if the panel slides easily. Remove the vinyl plug in the operating panel bottom rail to expose the roller adjustment screws. Raise or lower the door by turning the adjustment screw(s) until the door contacts yet slides easily over the sill dust block and weatherstrip. Open the door 1/4″–1/2″ (6–13) from the jamb and adjust the door so it is parallel to the jamb/stationary stile. See illustration 21.

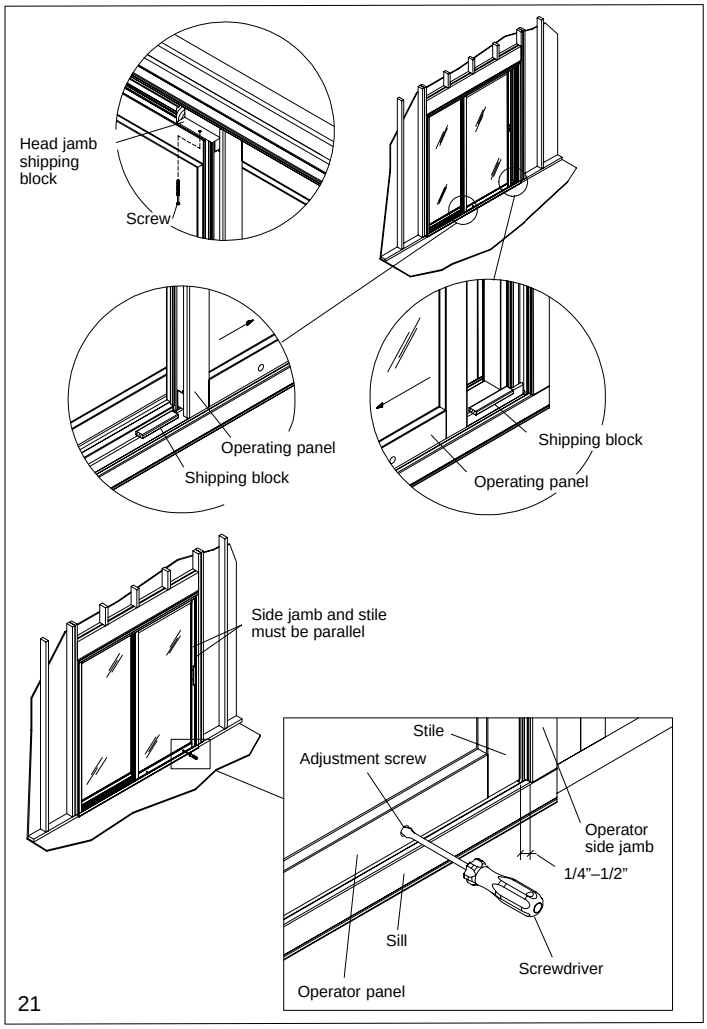

21

25. When the panel is parallel to the jamb/stationary panel and operating correctly, replace the vinyl plugs at the bottom of the door.

## INSTALLING THE HANDLE

*NOTE: If the door unit was ordered without an exterior key cylinder skip to step 34.*

26. If you are installing a keylock, determine the proper position for the key lock cylinder and housing on the exterior handle by lining up the exterior handle with the mounting holes in the stile cladding. On the back side of the exterior handle assembly, drill out the three corresponding holes for the cylinder and housing mounting screws with 9/16″ and 5/16″ bits respectively. See illustration 22.

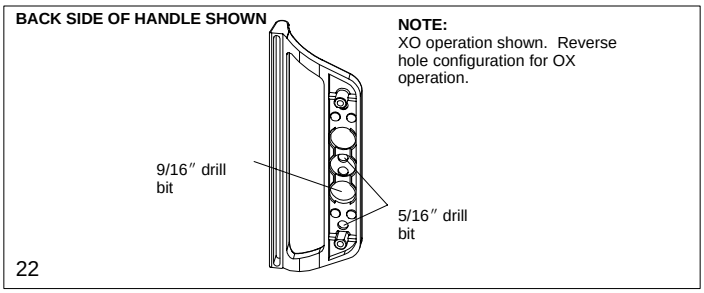

22

27. Insert the key cylinder into housing with the brass tab up. Position the housing on the exterior handle and attach with two screws provided. See illustration 23.

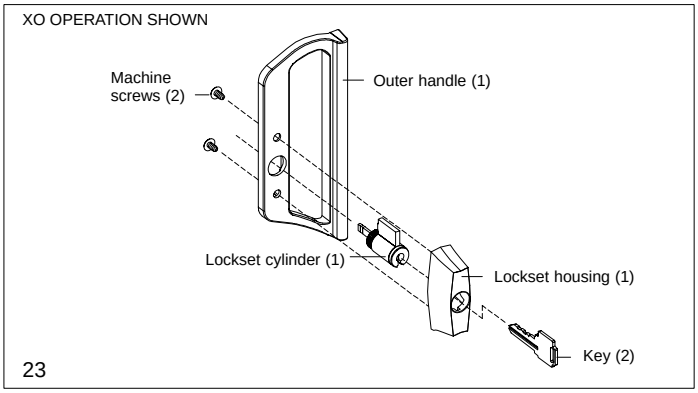

23

28. Install the thumb turn lever tail into the door latch hub slot.

Place the interior and exterior handle on the door with the grip toward the glass. Install the 2″ machine screws through the handles and tighten. See illustration 24.

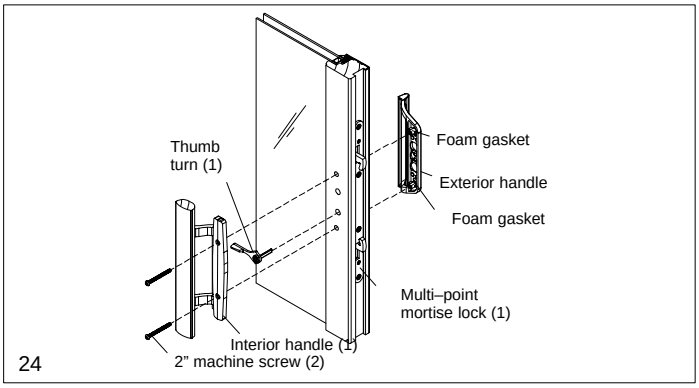

24

29. Install the strike on the door jamb with four screws; mark strike location by inserting two strike screws through the template supplied. Lock the template into the mortise lock and close panel until screw points contact jamb, push panel to mark jamb strike plate location. Remove template and install strike on jamb with screws. Place shims between the jamb and rough opening at top and bottom of keeper when applying to a locking jamb. Check vertical alignment of strike to latch hooks. Adjust as needed by loosening screws and sliding strike up or down. See illustration 25.

**IMPORTANT:** If you are attaching the keeper to a stationary panel stile, you MUST use #8 x 1 1/2″ panhead wood screws. Failure to do this may result in severe damage to the stationary panel insulating glass unit.

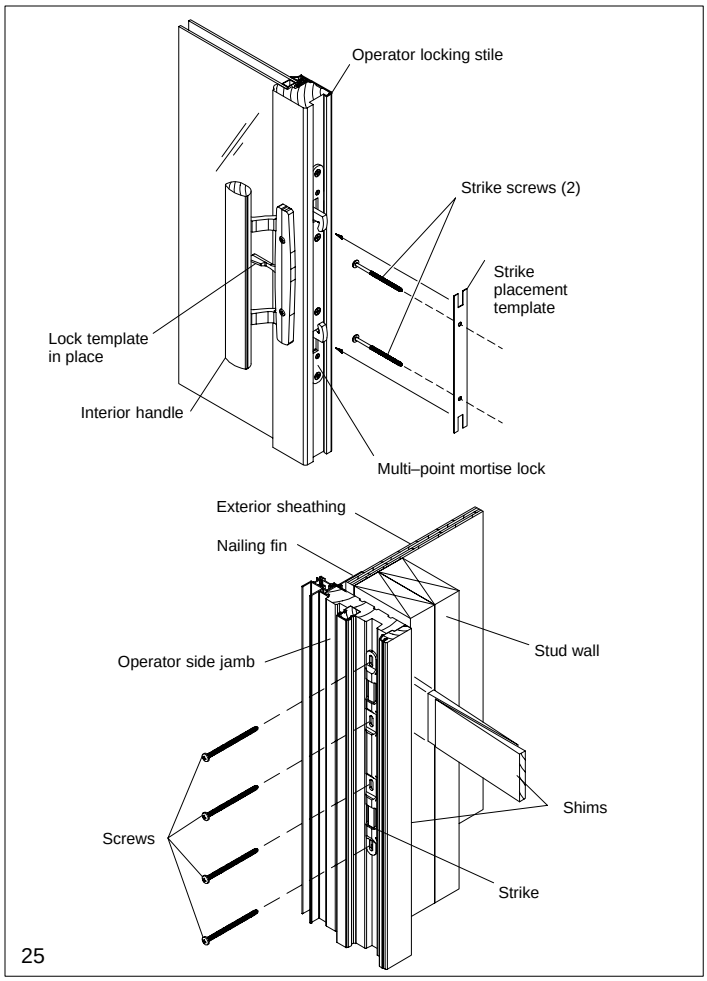


30. After the latch and strike are aligned, adjust latch hooks by rotating adjustment screws above/below hooks with a standard screwdriver. Before final adjustments are made (with operating panel fully closed) check to see if any resistance is felt when operating the turn lever, extend latch hooks as needed until lever operates freely. Then adjust one latch hook at a time, rotate adjustment screw to draw latch hook into the lock in small increments, close the panel and check lever operation. Adjust the hook until slight resistance is felt at the end of thumb turn lever travel and panel is drawn snug against locking jamb. Repeat final adjustment procedures for the remaining latch hook. See illustration 26.

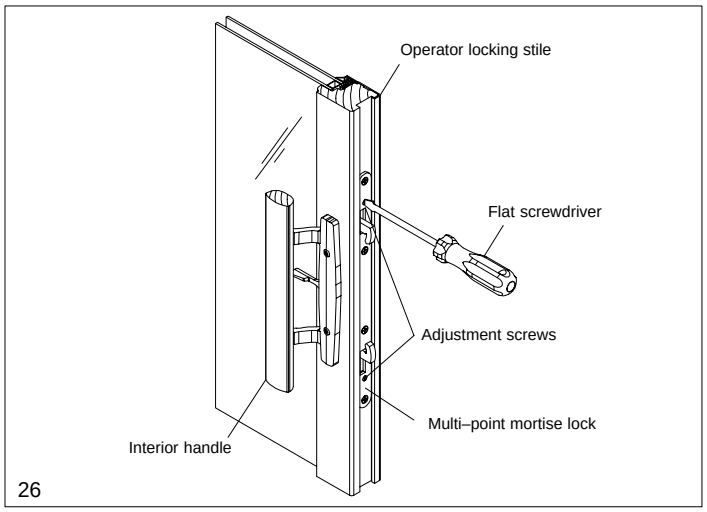


31. Finish the Trimline Patio Door handles immediately. If left unfinished, dirt and oils from handling will make it difficult for stain and varnish to adhere to the wood surface and will void any warranty, written or implied.

## INSTALLING THE SCREEN

32. Insert the top of the screen into the screen track and set the bottom on the sill track.

33. Adjust the top rollers by turning the adjustment button in the direction shown (less than 1/4 turn is needed). See illustration 27.

34. Repeat the above step for the bottom rollers until the screen does not drag on the sill and a slight amount of resistance is felt when sliding, approximately 1/2 turn or less. See illustration 27.

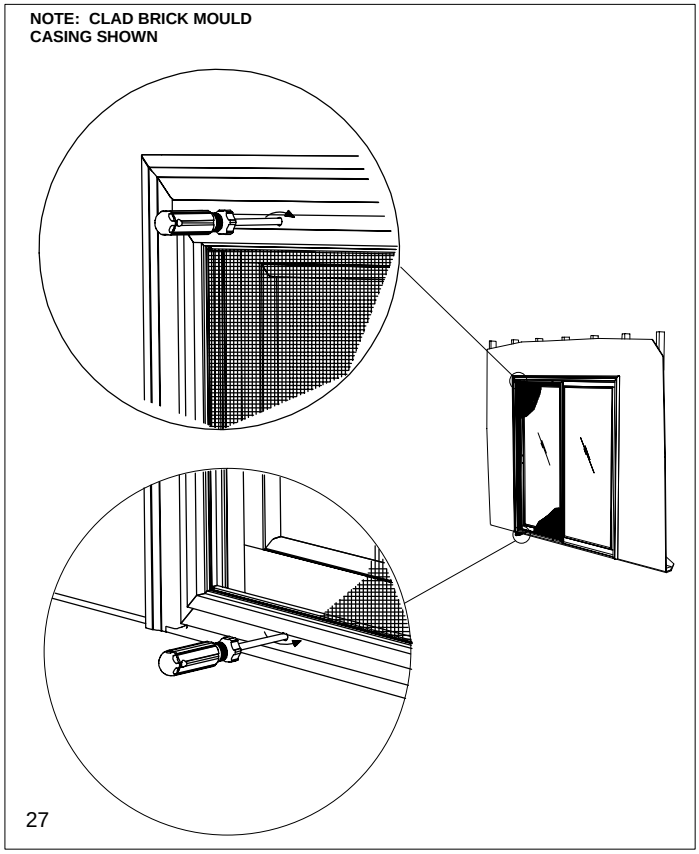


35. To install screen lock on side (or center) jamb, raise (unlock) the screen latch. Open screen and mark location of bottom of latch on exterior face of the screen lightly with a lead pencil. Close the screen against the jamb. Transfer latch location from screen frame to jamb.
Open the screen, position the top of the strike on jamb 1/8″ below the latch reference mark. Center the strike on jamb between the interior and exterior face of the screen. Mark the center of each screw slot on jamb. Drill pilot holes with a 3/32″ drill bit. Position strike on jamb and fasten with 2 – #6 x 1/2″ pan head screws. Set strike screws at center of the adjustment slots. See illustration 28.
Close screen and check latch operation, raise/lower strike as needed. Erase latch reference marks from screen and jamb.

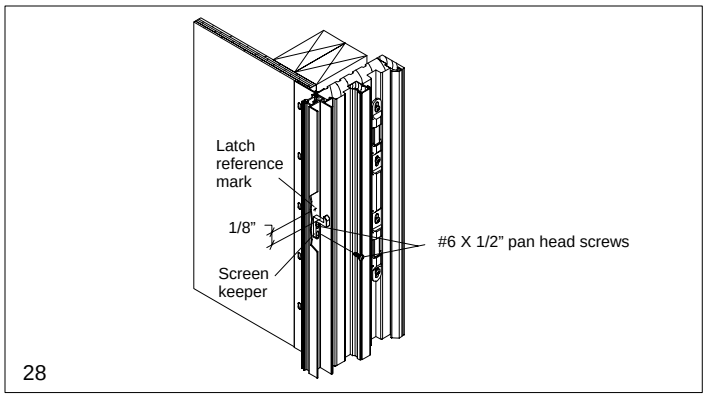

28

## REMOVING OPERATOR PANEL

36. With operating panel in the fully closed position remove all visible #6 x 1″ flathead Phillips wood screws from head jamb panel guide. Remove #8 x 2 1/2″ flathead Phillips wood screw from head jamb bumper block assembly, pull block from head jamb. Carefully slide operating panel into the fully open position (do not let the exterior handle hit the stationary stile). Remove remaining screws from head jamb panel guide. The guide and weatherstrip assembly should easily remove from the head jamb at this point. If not, remove machine screws from interior handle and remove interior and exterior handles from locking stile. Slide operating panel fully over toward stationary jamb to expose the remainder of the panel guide, remove any additional screws. Pull guide and weatherstrip assembly from head jamb. See illustration 29.

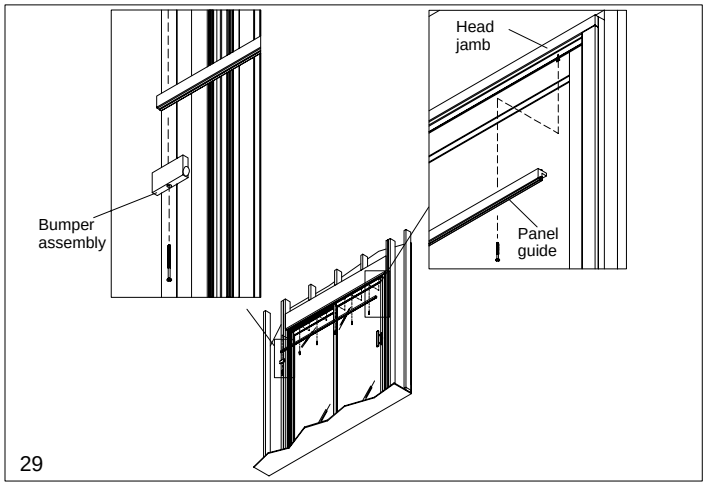

29

37. Remove #8 x 1 1/4″ flathead wood screws from entire length of panel track in head jamb. The track should easily remove from the head jamb at this point. If not, remove machine screws from interior handle and remove interior and exterior handles from locking stile. Slide operating panel fully over toward stationary jamb to expose the remainder of the panel track, remove any additional screws and track from head jamb. See illustration 30.

*NOTE: When panel track is removed from head jamb or if handles are removed and panel is clear of the top track the operating panel MUST be supported at the top to avoid tipping in to the interior.*

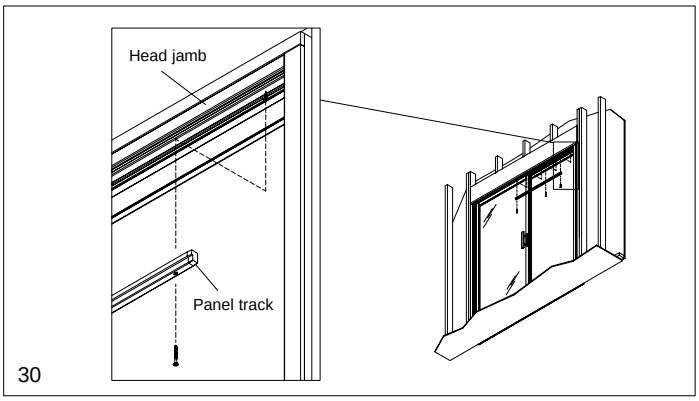

30

38. Tilt the top of operating panel to interior until clear of head jamb and interior trim. Lift panel from sill track and store upright in a safe location. See illustration 31.
To replace panel, reverse steps above. Ensure panel rollers are properly positioned on sill track before tilting panel into position. Support panel until panel track is fastened into head jamb and panel is closed enough to engage track.

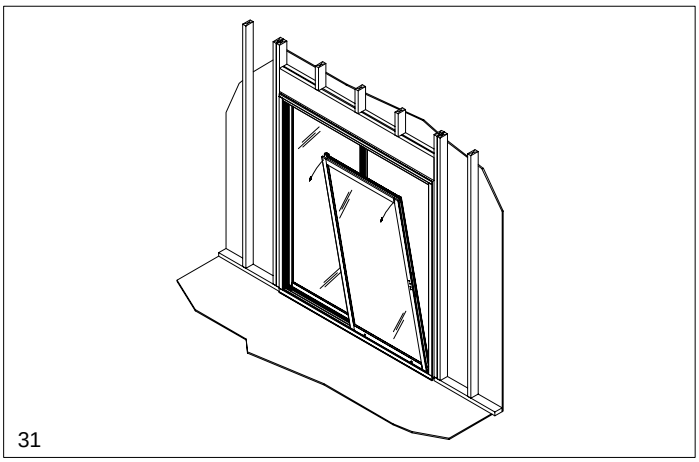
31