KD Clad Sliding Patio Door

Assembly Instructions

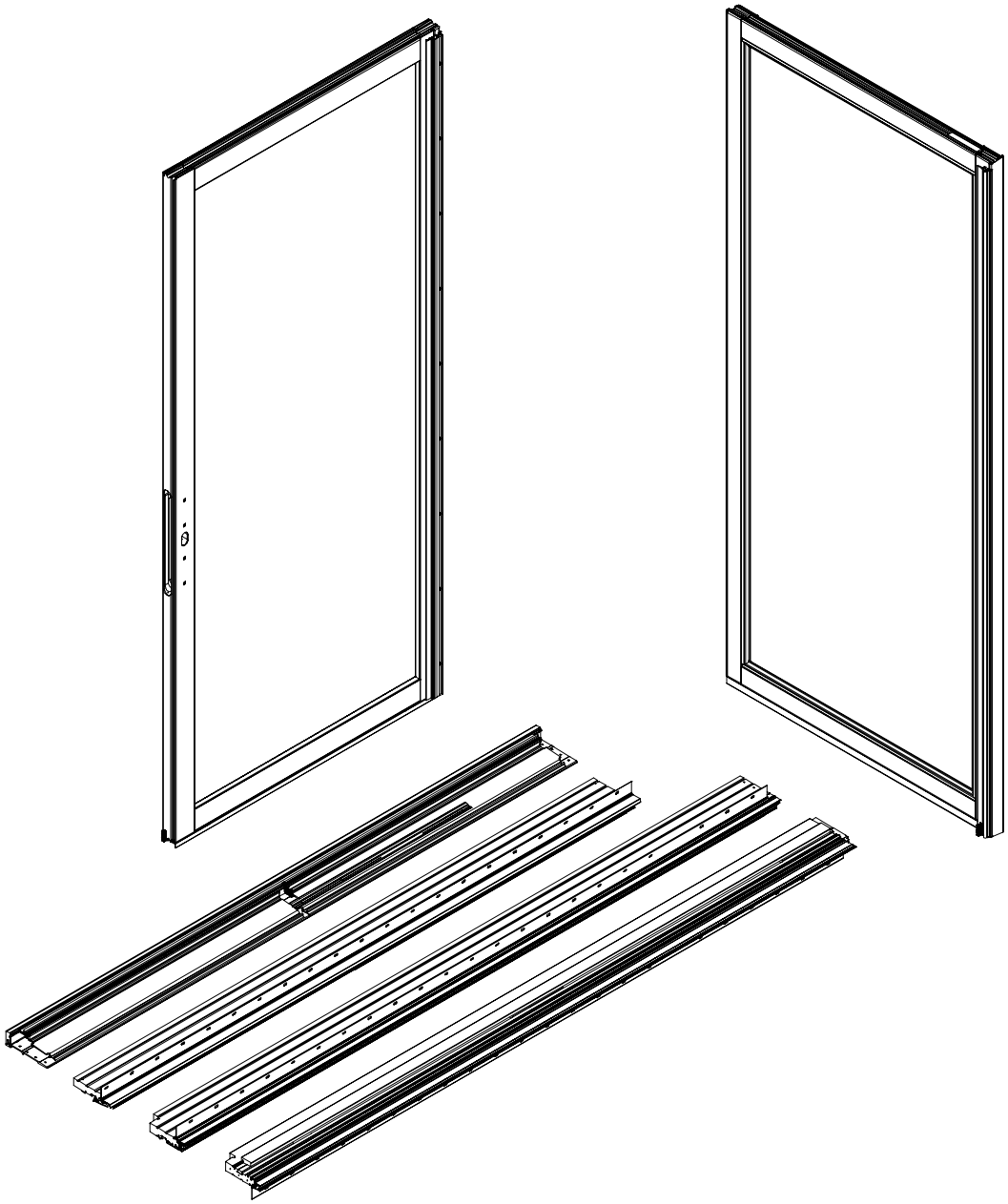

MARVIN®
Windows and Doors

Made for you.®

12/21/2006
19970041

BEFORE YOU BEGIN

IMPORTANT! Read these instructions thoroughly before beginning to assemble your KD (knocked down) Clad Sliding Patio Door. In addition, after assembly is completed, it is important to follow the installation instructions provided. Failure to assemble per assembly instructions will void any warranty, written or implied.

CAUTION: Large door units may require more than one person to assemble the unit. Adequate help for the size of unit being assembled is required.

WARNING: Practice safety! Wear safety glasses or goggles when assembling a Marvin window or door product.

CONFIGURATIONS

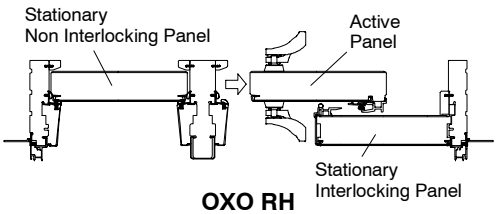

OXO RH

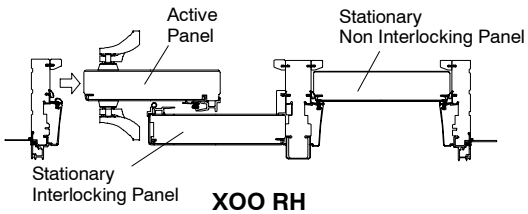

XOO RH

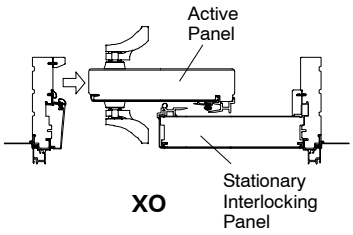

XO

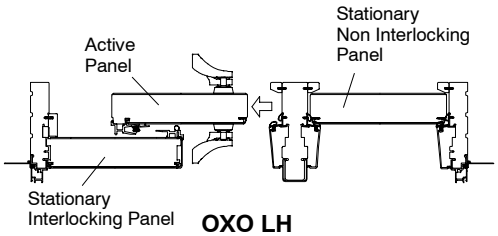

OXO LH

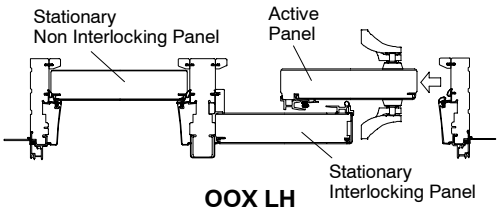

OOX LH

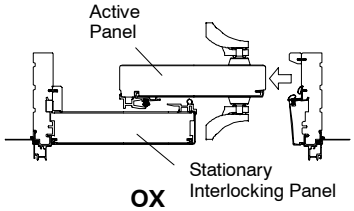

OX

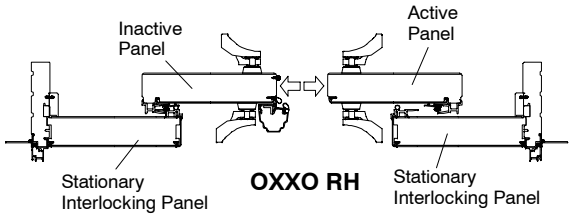

OXXO RH

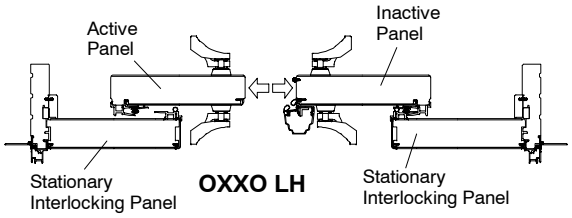

OXXO LH

YOU WILL NEED TO SUPPLY

Safety glasses	#2 Phillips screwdriver
3/32″ Drill bit	Step ladder
Nail set	Tape measure
1 1/2″ finish nails	Hammer
Wood block	Rubber mallet
Drill	Utility knife
Masking Tape	Isopropyl alcohol
Paper towels	
Grade NS 25 sealant per ASTM C920	

REPLACEMENT PARTS

If replacement parts are needed, please contact your local Marvin Windows and Doors dealer. Whenever possible, provide a part or profile number.

STANDARD PARTS SHIPPED WITH KNOCKED-DOWN CLAD SLIDING PATIO DOOR

2-wide assemblies include: 1-head jamb, 1-sill, 2-side jambs, 1 - active panel, 1 - interlocking stationary panel.

3-wide assemblies include: 1-head jamb, 1-sill, 2-side jambs, 1 - active panel, 1 - interlocking stationary panel, 1 - center jamb, 1 - non-interlocking panel.

4-wide assemblies include: 1-head jamb, 1-sill, 2-side jambs, 1 - active panel, 1 - inactive panel, 2 - interlocking stationary panels.

NOTE: Numbers listed in parentheses ( ) are metric equivalents in millimeters rounded to the nearest whole number.

ATTENTION: Specifications and technical data are subject to change without notice.

ILLUSTRATION *NOT TO SCALE*	DESCRIPTION	PART/PROFILE NUMBER
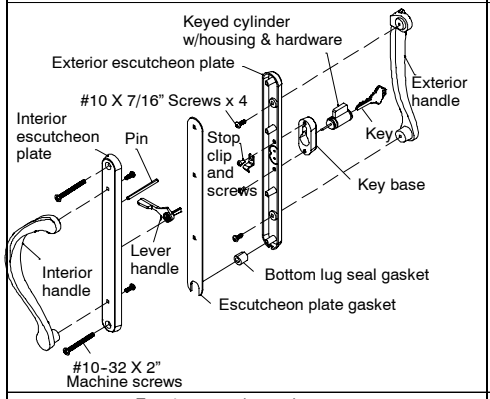	**Handle, Keyed**	Refer to Marvin Parts Manual
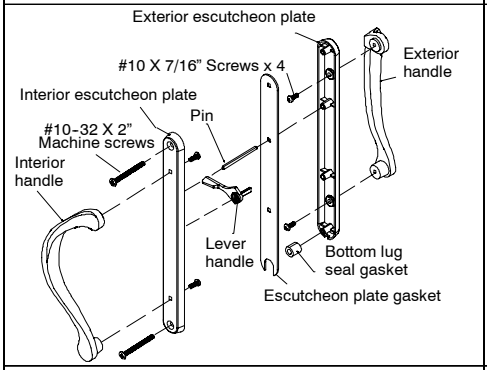	**Handle, Non-Keyed**	Refer to Marvin Parts Manual
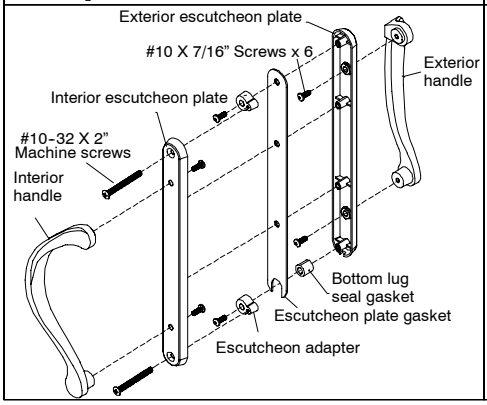	**Handle, Inactive** 4 Wide only	Refer to Marvin Parts Manual

Your KD Door should come with the following parts. Please check the quantities and contact your local Marvin Representative if problems.

ILLUSTRATION *NOT TO SCALE*	DESCRIPTION	PART/PROFILE NUMBER	QUANTITY
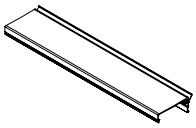	**Clad Head Jamb Part Stop with Vinyl Weather Strip**	A836 V1194	2 Panel – 1 3 Panel – 2 4 Panel – 1
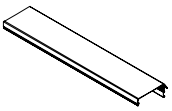	**Clad Side Jamb Part Stop with Vinyl Weather Strip**	A836 V796	2 Panel – 1 3 Panel – 3 4 Panel – N/A
	Wood Stationary Jamb Cover with Vinyl Connecting Barb	W7535 V803	2 Panel – 1 3 Panel – 1 4 Panel – 2
	Wood Jamb Liner with Vinyl Connecting Barb	W7536 V803	2 Panel – 1 3 Panel – 3 4 Panel – N/A

ILLUSTRATION *NOT TO SCALE*	DESCRIPTION	PART/PROFILE NUMBER	QUANTITY
	Wood Stationary Panel Cover with Dust Block *Dust block for interlocking stationary panel only (as shown)*	W7504	2 Panel – 1 3 Panel – 1 4 Panel – 2
	Vinyl Condensation Cover with Dust Block *Dust block for interlocking stationary panel only (as shown)*	V1131	2 Panel – 1 3 Panel – 1 4 Panel – 2
	Foam Backer Rod	10500204	One lineal length
	Header Guide with Wood Cover	A1014 W8040	One per door
	Wood Panel Guide with Tape	W8040	2 Panel – N/A 3 Panel – 1 4 Panel – N/A
	Nailing Fin Corner Gaskets with Instructions Package of four	11869519	One pkg per door
	Head Jamb Bracket	11860212	2 Panel – 1 3 Panel – 1 4 Panel – 2
	Side Jamb Bracket	11841000	2 Panel – 4 3 Panel – 4 4 Panel – 8
	Clad Sliding Patio Door Installation Instructions	19970039	One per door
You will receive one of the following based on what type of screen or if no screen was ordered.			
	Standard Screen Track	A1070	2 Panel – 1 3 Panel – 1 4 Panel – 2
	Ultimate Screen Track	A777	2 Panel – 1 3 Panel – 1 4 Panel – 2
	Screen Bumper Block (Ultimate only)	02540665	2 Panel – 1 3 Panel – 1 4 Panel – 2
	Screen Stop and Sill Strike Package	05700030	2 Panel – N/A 3 Panel – N/A 4 Panel – 1

For installation of your KD Sliding Patio Door, you will need a variety of screws. The quantity and type will be based on what configuration you have ordered. With your KD Sliding Patio Door you have received one of the following packages, determine which package matches your door by the description of the package.

		Quantity		
	Description	**2 Wide Unit Package Part Number 11800661**	**3 Wide Unit Package Part Number 11800662**	**4 Wide Unit Package Part Number 11800663**
A	#7x2″ Flat Head Screw	**10 Total** 6 - jamb to header 2 - header to jamb 2 - BMC to BMC (wood)	**13 Total** 6 - jamb to header 2 - header to jamb 2 - BMC to BMC (wood) 3 - center jamb	**10 Total** 6 - jamb to header 2 - header to jamb 2 - BMC to BMC (wood)
B	#8x3″ Flat Head Screw	**4 Total** 2 - BMC to BMC (wood) 2 - sill to casing (wood)	**4 Total** 2 - BMC to BMC (wood) 2 - sill to casing (wood)	**4 Total** 2 - BMC to BMC (wood) 2 - sill to casing (wood)
C	#8x1 1/2″ Flat Head Screw	**7 Total** 3 - stationary panel cover 2 - head jamb to jamb (clad) 2 - sill to jamb (clad)	**8 Total** 3 - stationary panel cover 2 - head jamb to jamb (clad) 1 - sill to mull casing 2 - sill to jamb (clad)	**10 Total** 6 - stationary panel cover 2 - head jamb to jamb (clad) 2 - sill to jamb (clad)
D	Corner Keys	**2 Total** 2 - top corner of frame (clad)	**2 Total** 2 - top corner of frame (clad)	**2 Total** 2 - top corner of frame (clad)
E	#8x3″ Pan Head Screw	**10 Total** 6 - sill to jamb 4 - jamb strike	**13 Total** 6 - sill to jamb 4 - jamb strike 3 - center jamb	**6 Total** 6 - sill to jamb
F	#8x1 1/2″ Pan Head Screw	**4 Total** 2 - bumper block 2 - sill liner to jamb	**5 Total** 2 - bumper block 2 - sill liner to jamb 1 - sill liner to center jamb	**6 Total** 4 - bumper block 2 - sill liner to jamb
G	Sill Gasket (pair)	**1 Total** 1 - sill to frame	**2 Total** 1 - sill to frame 1 - sill to center jamb	**1 Total** 1 - sill to frame
H	#8x1″ Flat Head Screw	**8 Total** 4 - panel guide to head jamb 2 - head jamb bracket to interlock panel 2 - head jamb bracket to head jamb	**8 Total** 4 - panel guide to head jamb 2 - head jamb bracket to interlock panel 2 - head jamb bracket to head jamb	**16 Total** 8 - panel guide to head jamb 4 - head jamb bracket to interlock panel 4 - head jamb bracket to head jamb
I	Bumper Block	**2 Total** 2 - head and sill	**2 Total** 2 - head and sill	**4 Total** 4 - head jamb and sill
J	Rubber Bumper	**2 Total** 2 - bumper block	**2 Total** 2 - bumper block	**4 Total** 4 - bumper block
K	#7x5/8″ Self Tapping Screw	**6 Total** 4-6 - screen track	**6 Total** 4-6 - screen track	**12 Total** 12 - screen track
L	#7x5/8″ Flat Head Screw	**8 Total** 8 - side jamb bracket to jamb	**8 Total** 8 - side jamb bracket to center jamb (or) 8 - side jamb bracket to jamb	**16 Total** 8 - side jamb bracket to left jamb 8 - side jamb bracket to right jamb
M	#7x3/4″ Flat Head Screw	**8 Total** 8 - side jamb bracket to interlock panel	**8 Total** 8 - side jamb bracket to interlock panel	**16 Total** 8 - side jamb bracket to left interlock panel 8 - side jamb bracket to right interlock panel

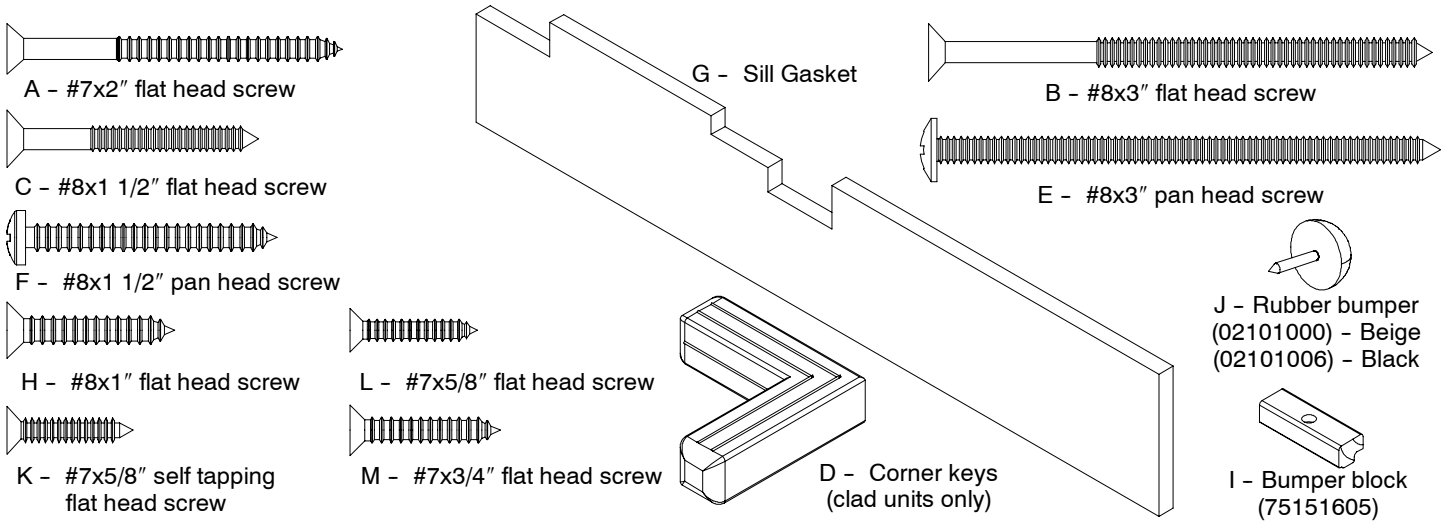

ASSEMBLING THE DOOR FRAME

1. Lay the vertical jambs, head jamb and sill on a flat, level surface exterior cladding facing down.
2. Apply the sill gasket to the bottom of the jamb. Index gasket from the front of the cladding, and allow it to overhang by 1/32″ on rough opening side. Wrap the gasket up the interior side of the jamb. For three wide units, follow the same procedure for attaching the sill gasket to the center jamb. See illustration 1.
3. Apply a 3/16″ (5) bead of sealant across the notch in the jamb. See illustration 1.

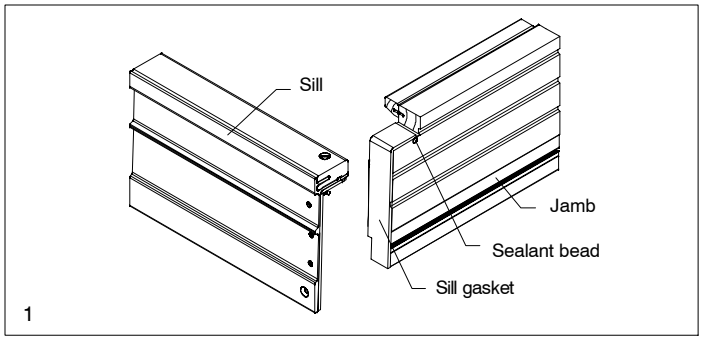

4. In order to apply the sill to the jamb, first remove the tape liner from the sill gasket. Spray a light mist of alcohol onto the sill where the gasket will be attached. Make sure sill area is clear of dust and debris before spraying with alcohol.

*NOTE: **For three wide units**, the center jamb must also be prepped.*

5. Ensure the interior side of the jamb is completely butted against the sill. See illustration 2.

NOTE: To prevent water leaks, be certain the jamb is aligned with the sill liner and butted against the sill.

6. Drill 1″ (25) through the predrilled hole in the sill liner into the jamb with a 3/32″ drill bit. Fasten the sill liner to the jamb with a #8 X 1 1/2″ Phillips pan head screw “F”. See illustration 2. **For three wide units**, an additional screw is applied through the sill liner into center jamb.

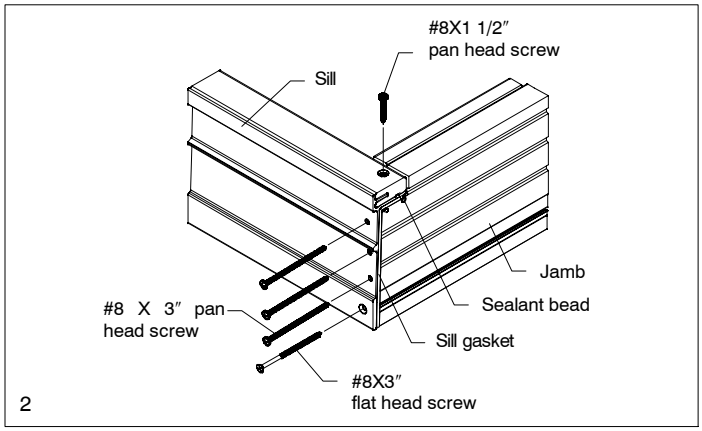

7. Using the predrilled holes in the sill, drill through the sill and into the wood portion of the side jamb, approximately 3″ (76) with a 3/32″ drill bit. Beginning with the hole closest to the sill liner, fasten the sill to the side jamb with #8 X 3″ Phillips **pan head** screws “E”. Fasten the sill to the jamb metal with #8 X 1 1/2″ Phillips flat head screw “C”.

NOTE: For three wide units follow step 8. For two wide and four wide units, skip to step 9.

8. **For 3 wide units** predrill with a 3/32″ drill bit into the center jamb and mull casing through the holes in the sill and apply sealant. Fasten the sill to the center jamb with three #8X3″ **pan head** screws “E”.See illustration 3.

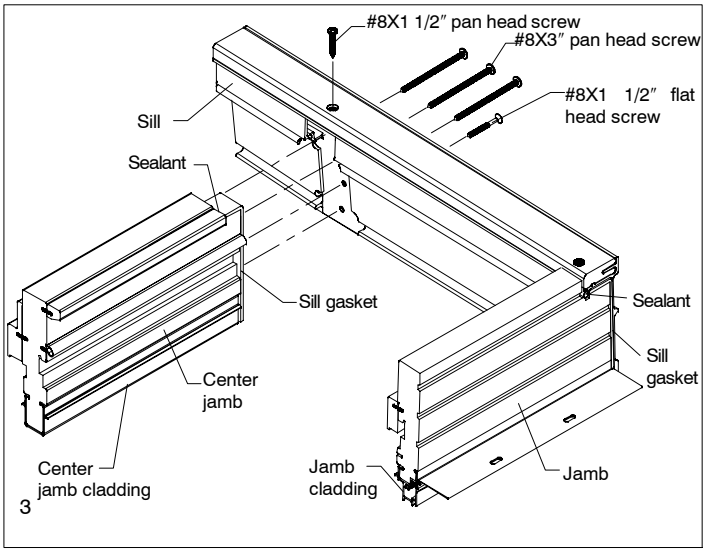

9. Insert the clad frame corner key “D” into the head jamb. Fasten the corners of the head jamb cladding to side jamb through the predrilled holes using #8X1 1/2″ Phillips flat head screws “C”. See illustration 4.
10. Attach head jamb to side jambs using #7X2″ flat head screws “A”. Attach side jamb to head jamb using #7X2″ flat head screws “A”. See illustration 4. Repeat for the second jamb.

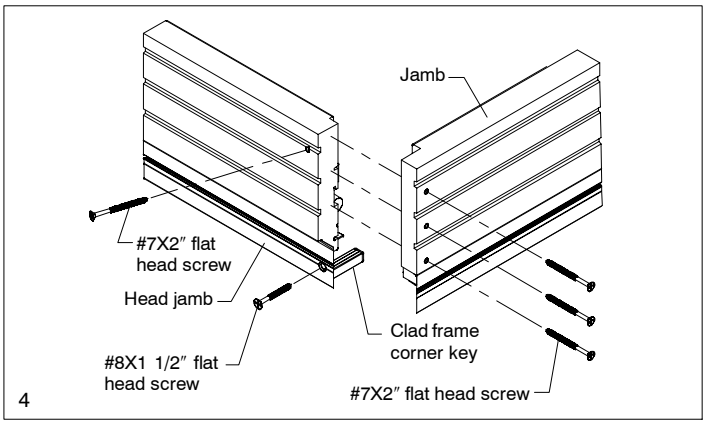

NOTE: For three wide units follow step 11. For two and four wide units skip to step 13.

11. For **three wide units** install the longest exterior clad head jamb part stop on the non-interlocking panel frame. Align the center jamb up against the head jamb and fasten through the predrilled holes with 3 #7 x 2″ flat head screws “A”. See illustration 5.

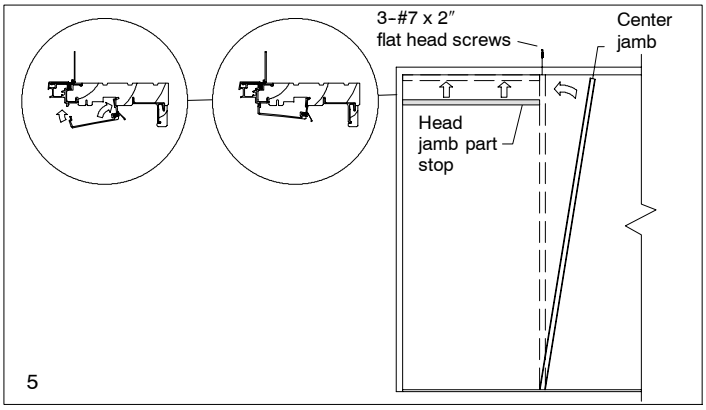

12. If applicable, apply nailing fin at this time. With help, stand frame up to vertical position. For ease of assembly temporally install unit into opening and fasten the top corners to structure.
13. Seal joint between sill and jamb with 1/8″ bead of sealant. See illustration 6a. Beginning underneath the sill weather strip, place a 3/16″ bead of sealant between the end of the sill and jamb weather strip. Continue the bead of sealant toward end of bulb as shown in illustration 6b.

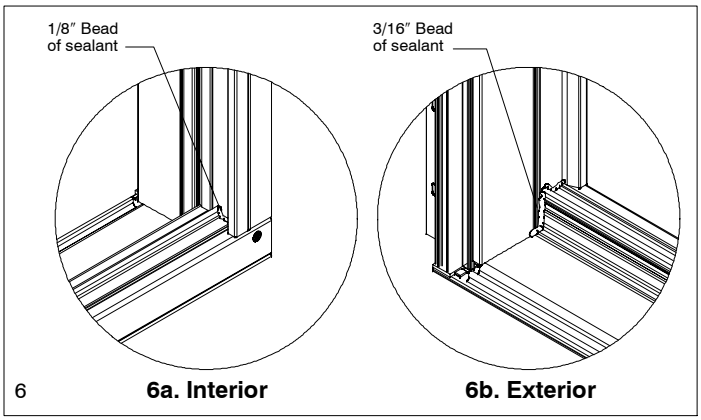

14. Apply a bead of sealant from the bottom of the sill vertically along the wood/clad seam, approximately 8-10″(203-254). Sealant must adhere to the Ultrex and wood/clad seam. See illustration 7a. Cover sealant with 2″ masking tape to avoid contamination. See illustration 7b.

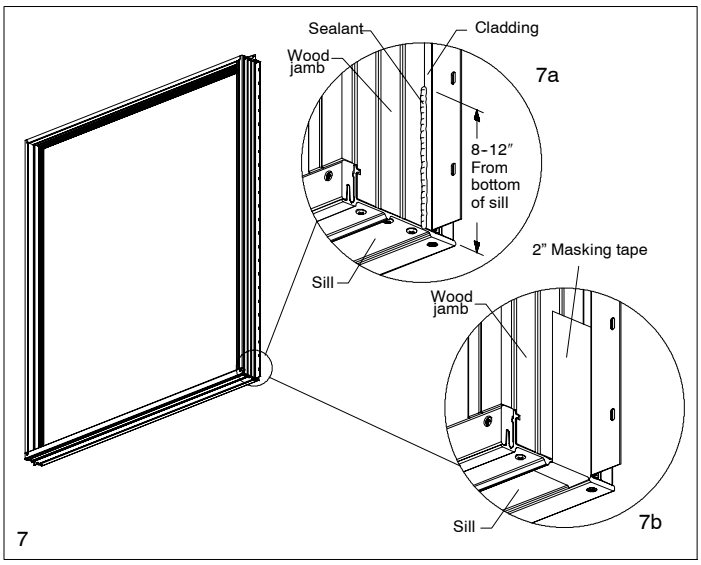

INSTALLING INTERLOCKING STATIONARY PANEL

WARNING: Large door units may be very heavy and awkward to handle. It is important to obtain adequate assistance to avoid injury when handling the unit.

*NOTE: **For four wide units**, follow steps 15-19 for the first stationary panel and then repeat these steps for the second stationary panel.*

15. Fasten 3 (4 on 8-0) side jamb brackets to the jamb side of the interlock panel through the predrilled holes with “M” #7x3/4″ flat head screws. See illustration 8a.
16. Through predrilled holes fasten stationary head jamb bracket to the interlock panel with “H” #8x1″ flat head screws. For placement of the screws see illustration 8b.

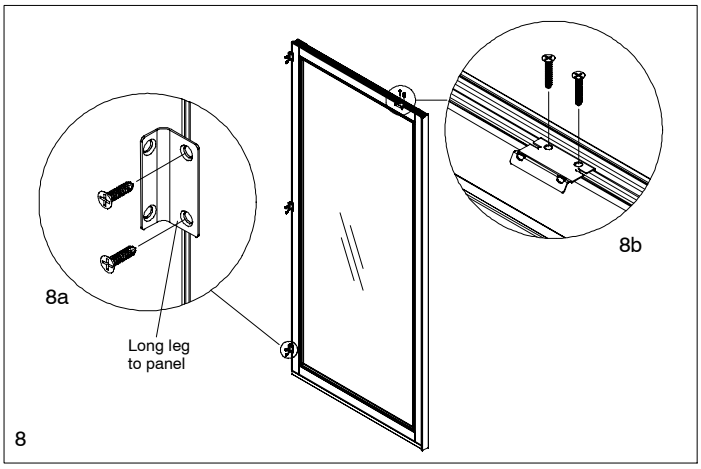

17. From the interior, place the interlocking stationary panel 6″ away from the jamb at an approx. 75 degree angle. See illustration 9.

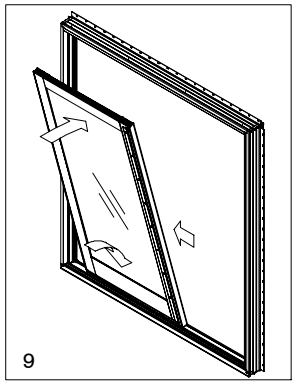

18. Push the bottom of the panel outward and gradually tilt panel to the upright position. Press the panel outward ensuring that the flange on the panel leveling block has fully seated into the sill clip and slide panel to the side jamb. See illustration 10.

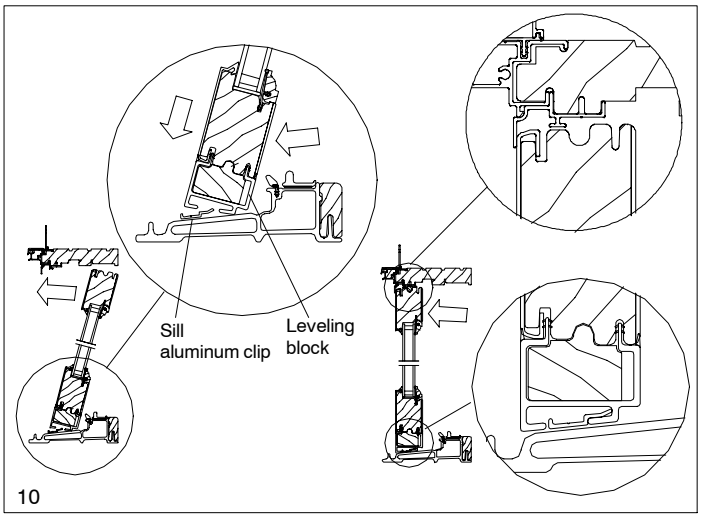

19. Fasten the interlock side jamb brackets to the side jamb (or center jamb) with “L” #7x5/8″ flat head screws. See illustration 11.

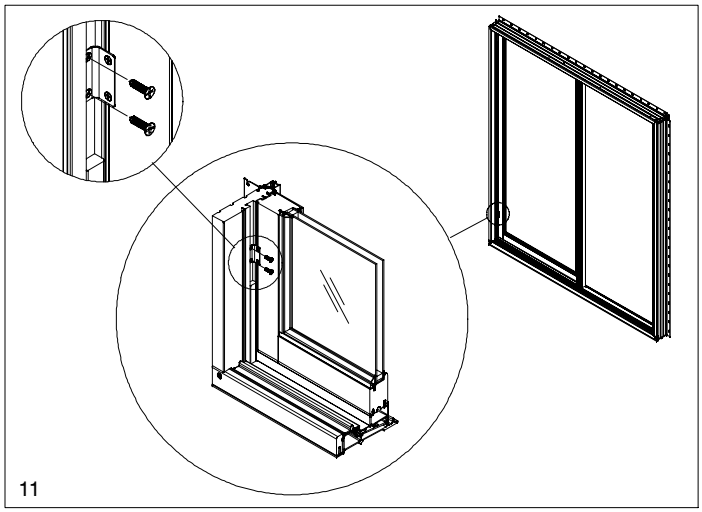

20. Use a stiff putty knife to bend the head jamb bracket into place. See illustration 12. Fasten the head jamb bracket to the head jamb with two “H” #8x1″ flat head screws placed at a 45° angle. See illustration 12.

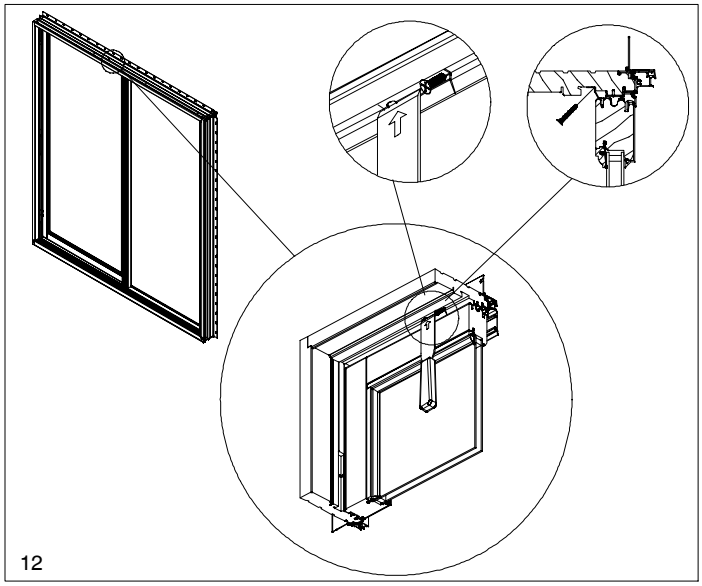

21. Install active panel exterior clad head jamb part stop up tight against the head jamb followed by the sill jamb part stop. See illustration 13.

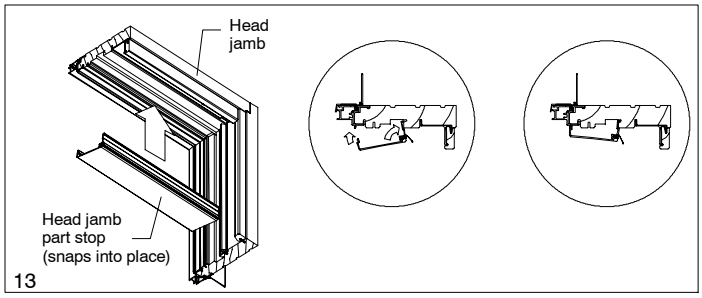

22. Insert condensation dust block end under interlock and slide into place. Tap until seated with a wood block and rubber mallet. See illustration 14.

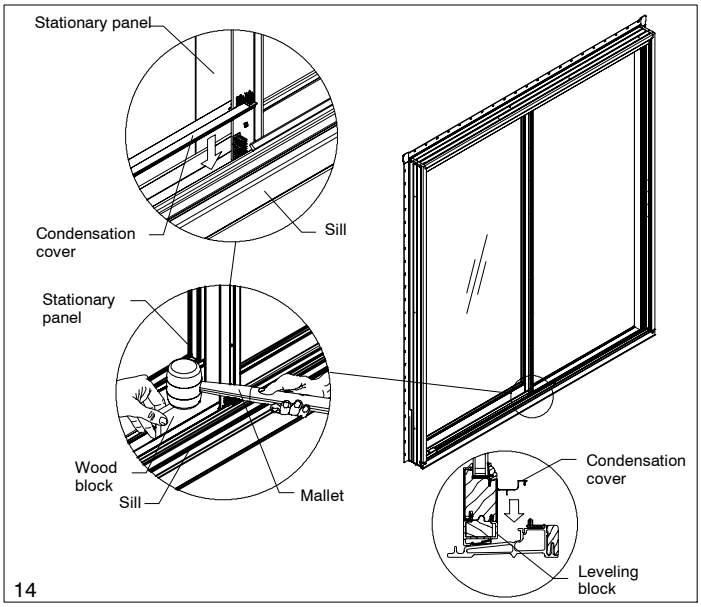

23. On interlocking stationary panels, start at the interior edge of the Ultrex sill jamb joint and apply a 3/16″ to 1/4″ bead of sealant towards the stationary panel and up 8-10″ (203-254) along the panel/jamb seam. See illustration 15. Apply to interlocking side of the center jamb if working with XOO or OOX configurations.

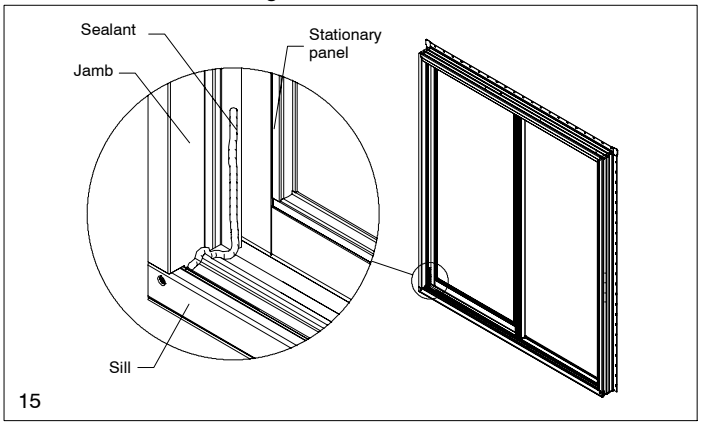

24. Attach wood interior stationary jamb cover(s). See illustration 16. Install wood interior jamb liner, bevel side towards panel.

NOTE: Four wide units will not have a jamb liner.

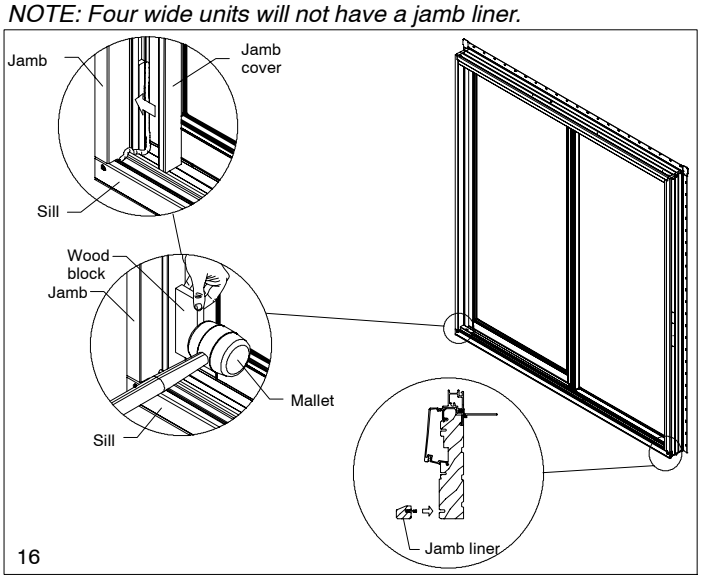

25. Place the sill bumper block against stationary jamb. Mark the drill bit at 1 1/4″ (32) to ensure you will not drill through the base of the sill. Using the hole in the bumper block, predrill into the sill using a 3/32″ drill bit. Fasten with #8 X 1 1/2″ pan head screw “F”. **Do not drill through the bottom layer of the sill.** Apply rubber bumper to the end of the bumper block. See illustration 17.

NOTE: The top bumper will be secured after the operating panel has been installed. This will be covered in the Clad Sliding Patio Door installation instructions.

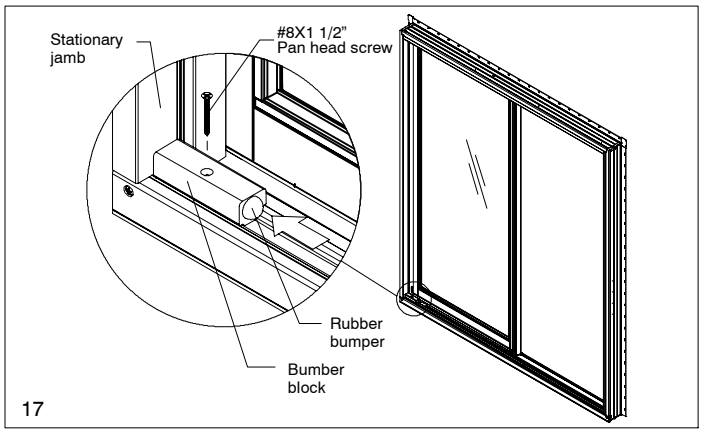

17

26. Cut the length of the backer rod the width of the stationary panel(s). Insert the backer rod between the top rail and the head jamb. Notch out backer rod around head jamb bracket. See illustration 18.

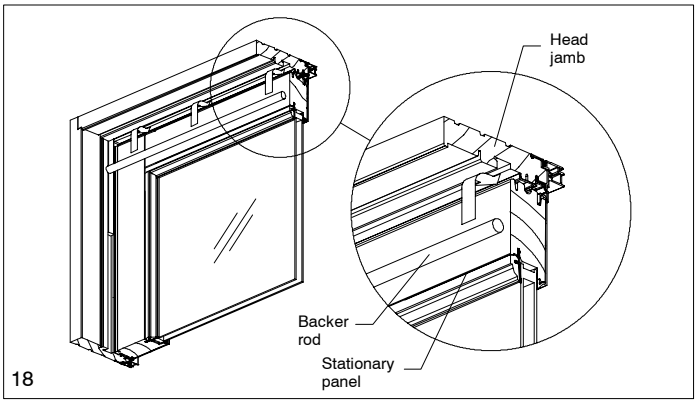

18

27. Insert dust block end of stationary cover over interlock and slide into place. Fasten the stationary cover(s) into the head jamb with three #8X1 1/2″ flat head screws “C” into the predrilled holes. See illustration 19.

NOTE: Four wide units will have two stationary covers.

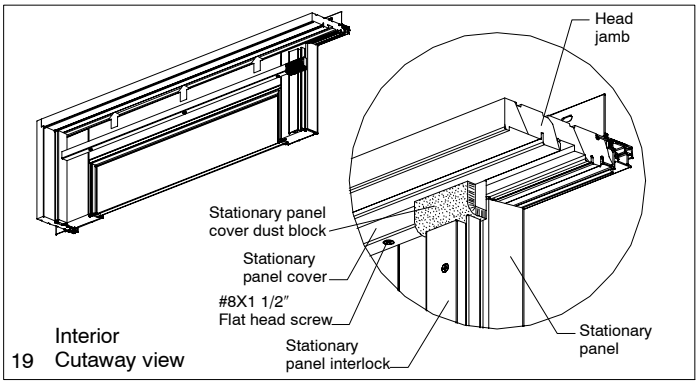

19 Interior Cutaway view

NOTE: For three wide units, continue with step 28. For two and four wide units, skip to step 32.

INSTALLING NON INTERLOCKING STATIONARY PANEL (OXO CONFIGURATION)

28. Install exterior clad jamb part stops up tight against head jamb part stop. See illustration 20a. Install the non-interlocking stationary panel from the interior by tilting the panel inward and placing the bottom of the panel onto the top of the sill. Tilt the panel into a vertical position against the head jamb part stop. See illustration 20b. Press in interior wood jamb liners (bevel side toward panel) and secure the panel into place with three #8 x 3″ flat head screws “B” through the predrilled holes in the side jamb. See illustration 20c.

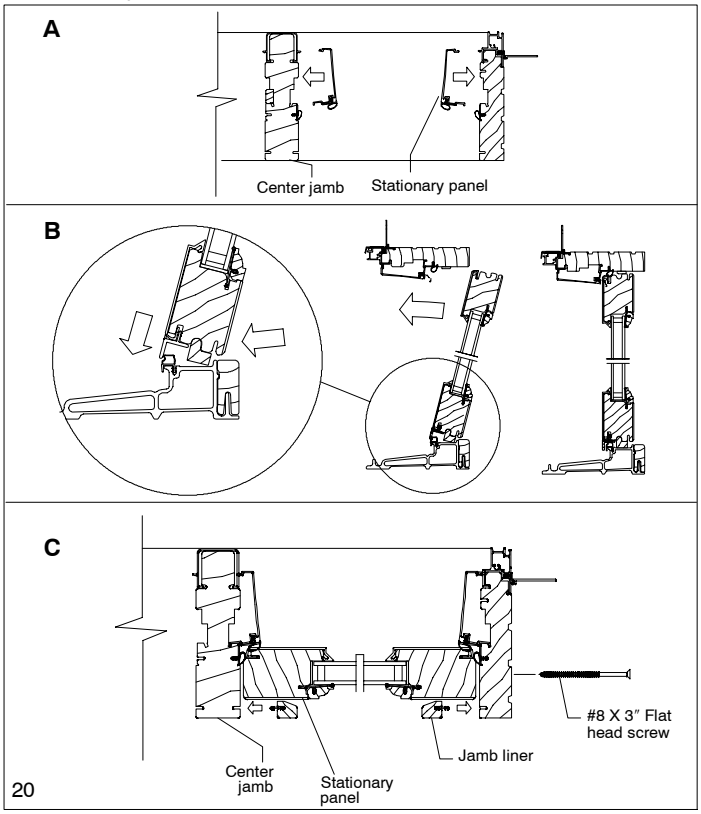

20

29. Attach the wood panel guide (with its applied tape) to the three wide non-interlocking panel. Fasten with 1 1/2″ (27) finish nail every 8″ (203).

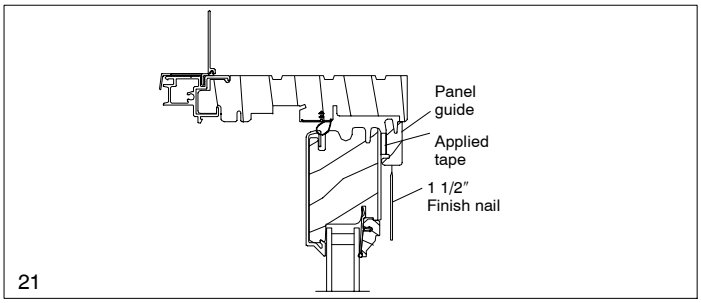

21

INSTALLING JAMB STRIKE (OXO CONFIGURATION)

*NOTE: For all other configurations refer to **Installing Jamb Strike** in the Sliding Patio Door installation instructions.*

30. Remove the top shipping screw from the jamb strike. Hold a straight-edge against the center jamb and replace the screw with one of the supplied #8X3″ pan head screws “E”. Tighten the screw while sighting along the straight-edge to make sure not to bow the center jamb. See illustration 22.

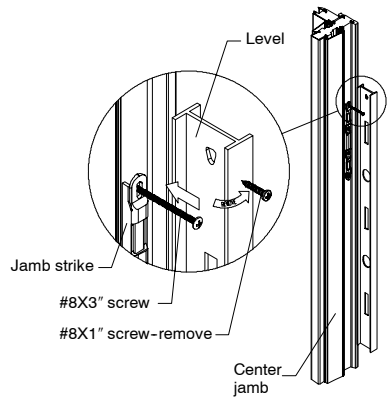

22

31. Follow the same procedure to replace the remaining three screws.

NOTE: Adjustment of jamb strike may be necessary. See Clad Sliding Patio Door installation instructions for more information.

SCREEN TRACK INSTALLATION

32. Place the screen track up into the head jamb above the active panel(s) and interlocking panel(s). Fasten the track to the head jamb with #7X5/8″ self tapping flat head screws “K” through pre-drilled holes in screen track. See illustration 23. The screen bumper is applied to the Ultimate screen only.

Standard

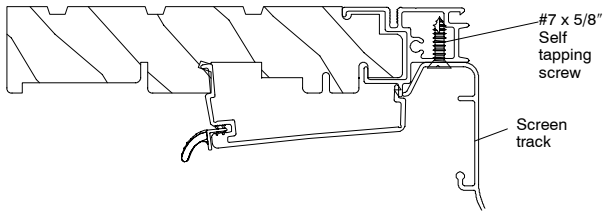

Ultimate

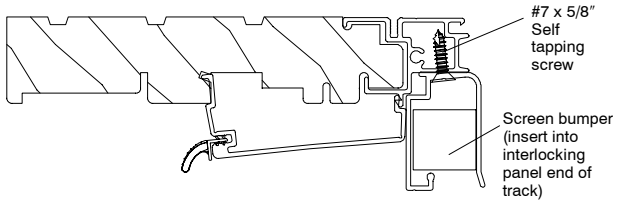

23

NOTE: The screen instructions will cover the proper installation of the screen onto the track.

33. Refer to the Clad Sliding Patio Door Installation Instructions to complete the installation and assembly of the door. The Sliding Patio Door Installation Instructions will include the proper installation of the inactive panel (for 4 panel doors), and active panel (for all doors) and will take into account the placement of the header guide with wood cover, the head jamb bumper block with rubber bumper, and the wood plugs included in your KD package.