Ultimate French Door Transom
Field Applied Mulling Instruction

The following instructions are for field mulling rectangular or round top transoms above Wood or Clad Ultimate French Doors (inswing, outswing and sliding).

WARNING: ONLY transoms that are within Marvin Windows and Doors direct mulling guidelines should be mulled as shown below. Other sizes require additional structural support at the mullion or to be installed in a separate opening. Contact your Marvin distributor or dealers for additional information. Marvin recommends only mulling a transom above an OX or XO configuration. Configurations such as XX and OXXO require separate openings for the transom and door.

Wood Transom

ATTENTION: Specifications and technical data are subject to change without notice.

STANDARD PARTS

Transom unit
Interior mull trim
12-Masonry brackets of the appropriate length
24- #7 x 5/8″ flat head screws*
Mulling tin
A850 mull fastener*
V803 connecting barb* (Only on pre - 2011 doors)

**Comes standard with doors prepped for field mulling. These items will need to be acquired for doors not prepped for mulling.*

YOU WILL NEED TO SUPPLY

Safety glasses
Hearing protection
Rubber mallet
Drill/driver with #2 Phillips bit
Tape measure
Clamp
Caulking gun
Staple and nail gun
15/16″ crown x 1/2″ staples
15/16″ crown x 7/8″ staples
Sealant/Adhesive[1]
F15 x 2 1/2″ brad nails

[1]Must be APA AFG-01 specification

Wood Transom 2011 Platform

Use the following procedures to mull a wood transom over a WUIFD unit

NOTE: If the wood French door is not prepped for a transom it will be necessary to remove the BMC prior to mulling. After mulling has been completed cut the BMC to length and reapply.

1. Apply two 3/16″ (5) beads of sealant/adhesive to the door head jamb along the entire length as shown in illustration 1. Locate one bead on center wood rib on the head jamb and the other bead 1/2″ (13) in from the exterior edge.

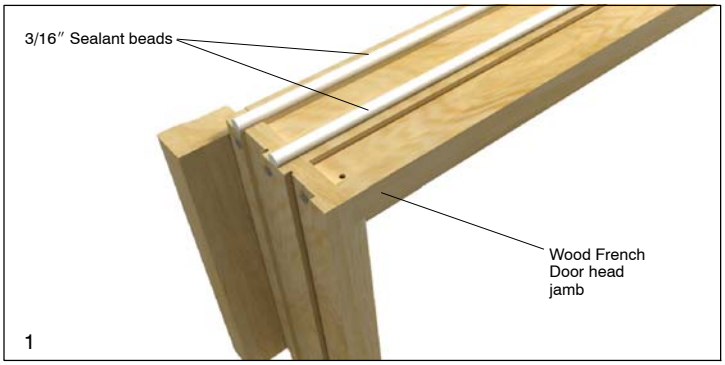

2. Position transom unit into position on top of head jamb as shown in illustration 2. Align transom sill ends with the door and flush the interior of the transom with the interior side of the door unit.

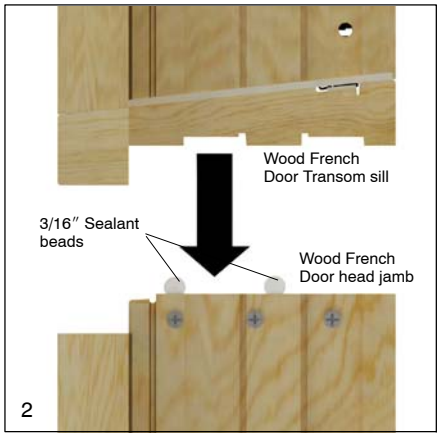

NOTE: Numbers listed in parentheses ( ) are metric equivalents in millimeters rounded to the nearest whole number.

3. Apply clamps at both ends of the transom sill and door head jamb to prevent movement. Use clamps with rubber protectors to prevent marring of the wood surface. Apply a third clamp if necessary. On the interior secure with 15/16″ x 7/8″ staples 1-2″ (25-51) from each end and every 4-6″ (102-152) along the mull. On the exterior use 2 1/2″ (64) brad nails with the same spacing. See illustration 3.

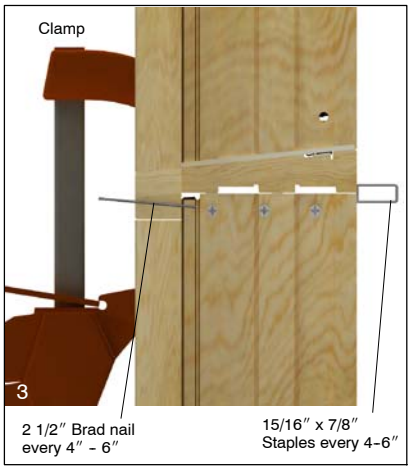

4. Apply mulling tin centered across the joint of the transom and door jamb on both sides of the assembly. Place mulling tin about 1/2″ (13) from interior of jambs. Staple across all four corners of the mulling tin using the 15/16″ x 1/2″ staples. Apply 12 more of the staples through the mulling tin into the jambs (six into the transom and six into the door jamb). Apply in an even pattern as shown in illustration 4.

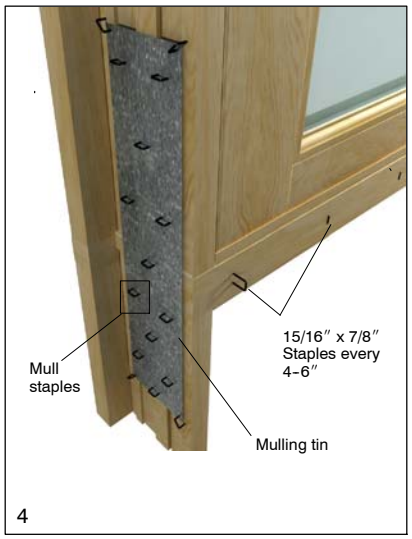

5. Apply a bead of sealant/adhesive across the joint of the transom sill and door unit exterior casing as shown in illustration 5.

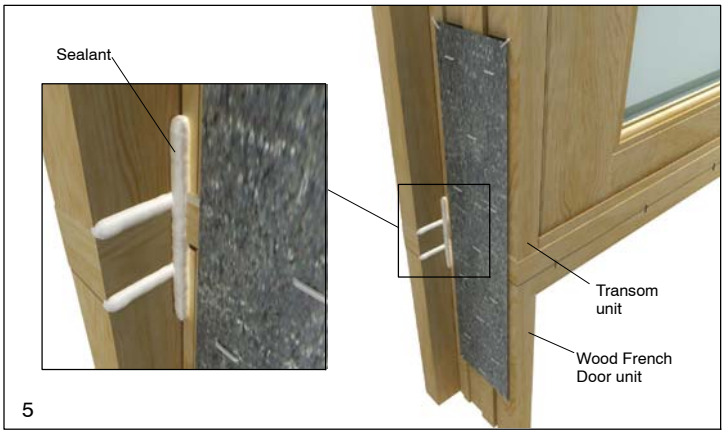

6. Apply any jamb extension if applicable.
7. Next apply masonry brackets (six per side) centering over the mulling tin as shown in illustration 6. Secure to the frame using the #7 x 5/8″ flathead screws (two per clip).
8. Follow specific product installation instructions.
9. Apply interior mull trim.

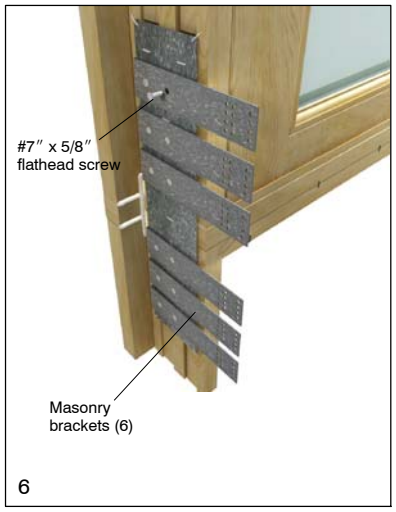

Wood Transom Pre-2011 Platform

Use the following procedures to mull a wood transom over WUOFD and sliding door units

NOTE: If the wood French door is not prepped for a transom it will be necessary to remove the BMC prior to mulling. Install the mull fastener and connecting barb to the head jamb of the door and fasten with #7 x 3/4″ screws. After mulling has been completed cut the BMC to length and reapply.

1. Apply two 1/4″ (6) beads of sealant/adhesive to the door head jamb along the entire length as shown in illustration 1. Locate one bead along joint of mull fastener and head jamb and the other bead 3/4″ (19) in from the interior edge.

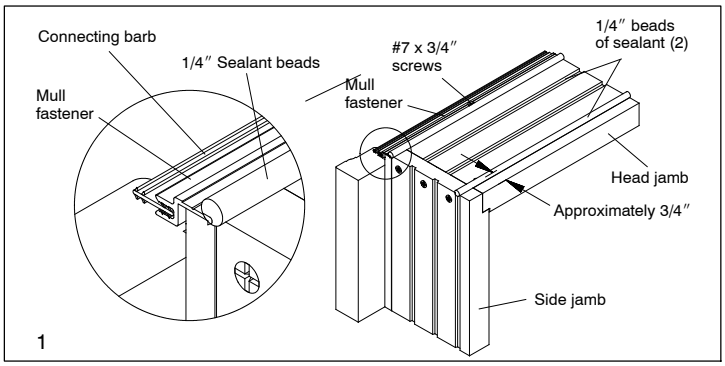

2. Position transom unit into position on top of head jamb as shown in illustration 2. Align transom sill ends flush with unit jambs. Secure the units together with the F15 x 2 1/2″ brad nails applied through the transom sill nosing into the door head jamb 2″ (51) in from the edges of the unit and every 8″ - 10″ (203 - 254) along the mull.

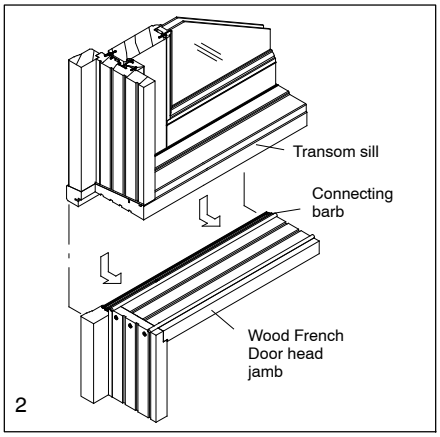

3. Once the transom sill and unit head jamb are flush apply clamps, to the interior for outswing units and on the exterior for sliding doors, at both ends of the transom sill and door head jamb to prevent movement. Use scrap pieces of wood to prevent marring of the wood surface if clamps do not have rubber protectors. Apply a third clamp if necessary and fasten 1-2″ (25-51) from each end with 15/16″ x 7/8″ staples and every 4-6″ (102-152) along the mull. See illustration 3.

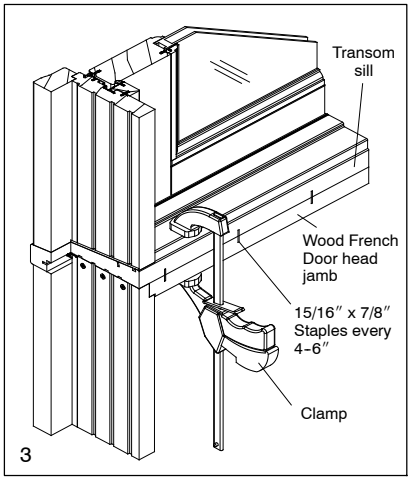

4. Apply mulling tin centered across the joint of the transom and door jamb on both sides of the assembly. Place mulling tin about 1/2″ (13) from interior of jambs. Staple across all four corners of the mulling tin using the 15/16″ x 1/2″ staples. Apply 12 more of the staples through the mulling tin into the jambs (six into the transom and six into the door jamb). Apply in an even pattern as shown in illustration 4.

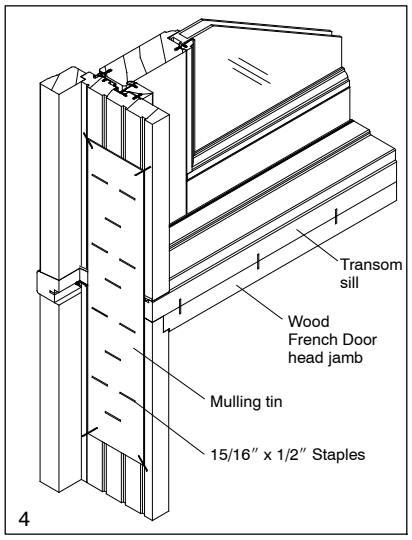

5. Apply a bead of sealant/adhesive across the joint of the transom sill and door unit exterior casing as shown in illustration 5.

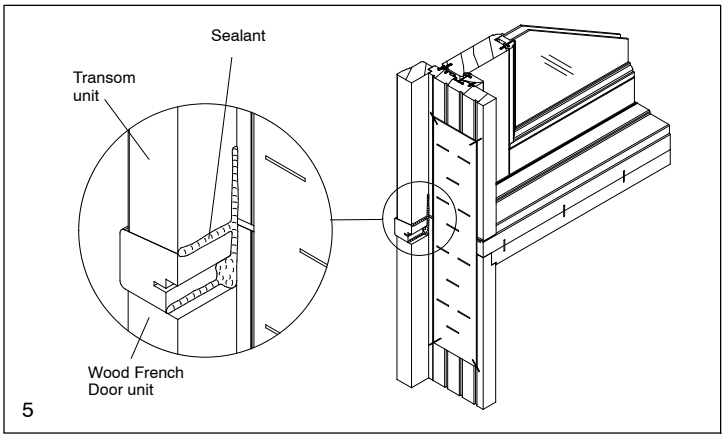

6. Apply any jamb extension if applicable.
7. Next apply masonry brackets (six per side) centering over the mulling tin as shown in illustration 6. Secure to the frame using the #7 x 5/8″ flathead screws (two per clip).
8. Follow specific product installation instructions.
9. Apply interior mull trim.

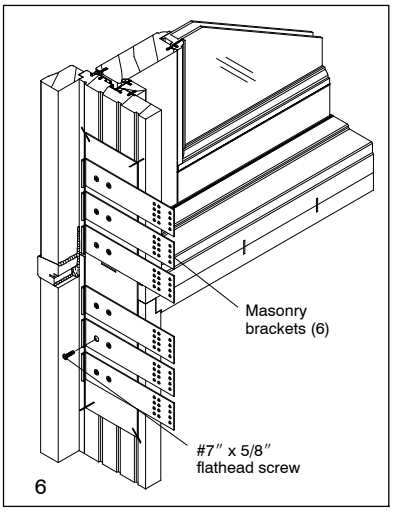

Clad Transom

Use the following procedures to mull a clad transom over all Clad Ultimate Swinging and Ultimate Clad Sliding Doors

STANDARD PARTS

Transom unit
Interior mull trim
A-104 Mull cap of appropriate length
One sided adhesive tape
12-Masonry clips (appropriate length for jamb depth)
24- #7 x 5/8″ flathead screws
Mulling tin
V803 connecting barb*

**Comes standard with doors prepped for field mulling. This item will need to be acquired for doors not prepped for mulling.*

YOU WILL NEED TO SUPPLY

Safety glasses
Hearing protection
Rubber mallet
Drill/driver with #2 Phillips bit
Tape measure
Clamps
Hammer
Scrap wood block
Caulking gun
Staple gun
15/16″ crown x 1/2″ staples
15/16″ crown x 7/8″ staples
Sealant/Adhesive[1]

[1]Must be APA AFG-01 specification

NOTE: Numbers listed in parentheses ( ) are metric equivalents in millimeters rounded to the nearest whole number.

NOTE: Outswing unit shown for illustrative purposes.

1. Remove nailing fin (rectangular transom application) attached to the head jamb of the door unit and fold side jamb nailing fin out of the way before mulling components together. See illustration1 and 2. Round top applications will have separate unit nailing fins. Note: If clad casings are to be applied, nailing fins will not be applied to the units.
2. Using a chisel, notch out the clad frame corner (both door and transom) on one side to accept the clad mull cap. If clad casing is to be applied the unit will need to be notched on both sides as well as the head jamb of the transom . See illustration 1.

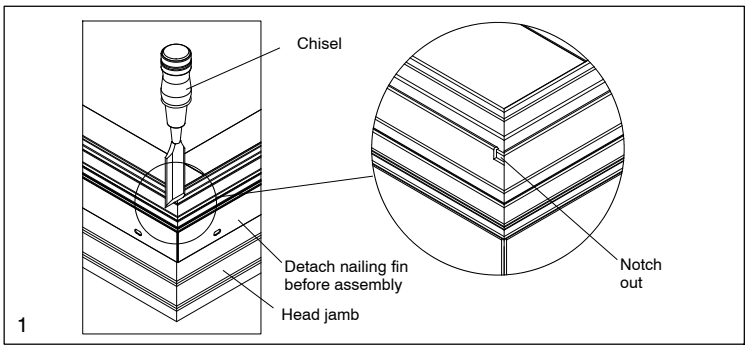

3. Cover both screw heads that secure the head cladding to the jamb cladding with sealant/adhesive as shown in illustration 2.

NOTE: Marvin recommends an APA AFG-01 sealant/adhesive (or equivalent) to be used in this application.

4. Apply one sided adhesive backed frame mullion sealant foam mull tape (if not factory applied) to the jamb and head jamb as shown in illustrations 2 and 3. Apply two 1/4″ (6) beads of sealant/ adhesive to the door head jamb along entire length as shown in illustrations 2 and 3. Locate one bead along joint of head jamb cladding and head jamb and the second bead approximately 3/4″ (19) from the interior edge. See illustrations 2 and 3.

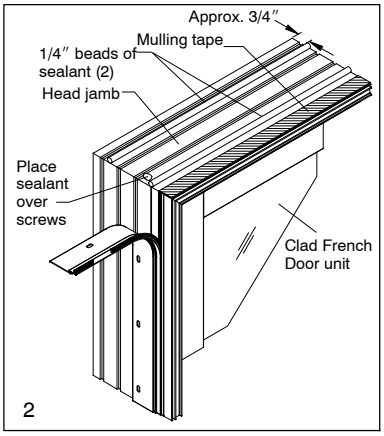

5. Position the transom on the head jamb of the door so that the connecting barb aligns with the slot in the bottom of the transom sill. Push units together to engage connecting barb. See illustration 3. Ensure that transom jamb is flush on both sides. See illustration3 and 4.

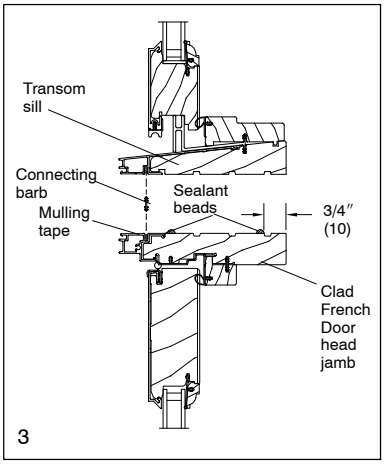

6. Slide the mull cap onto the head jamb and sill kerf from the side of the door that has the notches. Use a block and hammer to drive the cap the full length of the kerf. Cut off excess if necessary. Ensure that the mull cap does not extend in the vertical kerf. See illustration 4.

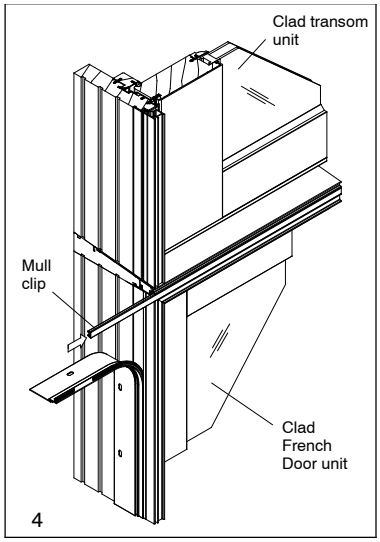

7. Once the transom sill and unit head jamb are flush apply clamps, to the interior for outswing units and to the exterior for sliding units, at both ends of the transom sill and door head jamb to prevent movement. Use scrap pieces of wood to prevent marring of the wood surface if clamps do not have rubber protectors. Apply a third clamp if necessary and fasten 1-2″ (25-51) from each end with 15/16″ x 7/8″ staples and every 4-6″ (102-152) along the mull. See illustration 5.

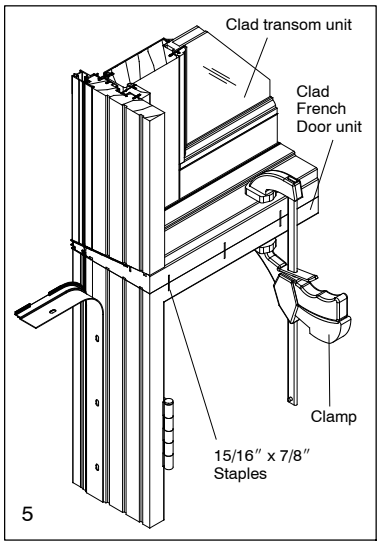

8. Apply mulling tin centered across the joint of the transom and door jamb on both sides of the assembly. Place mulling tin about 1/2″ (13) from interior of jambs. Staple across all four corners of the mulling tin using the 15/16″ x 1/2″ staples. Apply 12 more of the staples through the mulling tin into the jambs (six into the transom and six into the door jamb). Apply in an even pattern as shown in illustration 6.

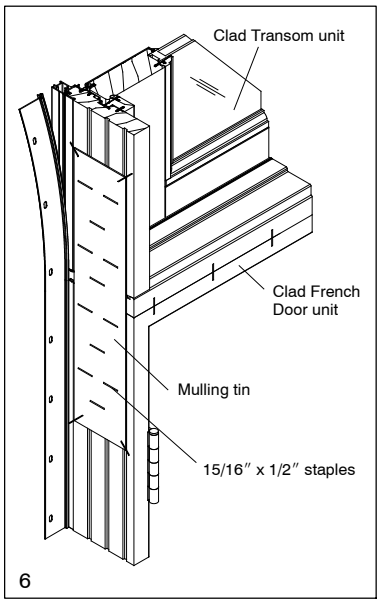

9. Apply transom nailing fin (rectangular transoms) by pushing the barb into the slot on the cladding.

NOTE: Round top transoms will have separate unit nailing fins. Trim nailing fin to proper length as necessary. See illustration 7.

Skip to step 11 if clad casing is being applied.

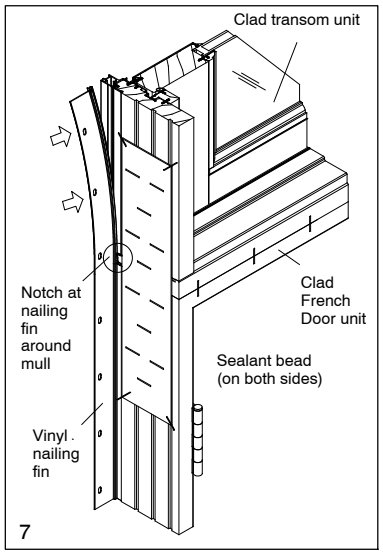

10. Seal with sealant/adhesive on both sides of the nailing fin per respective transom as shown in illustration 8.

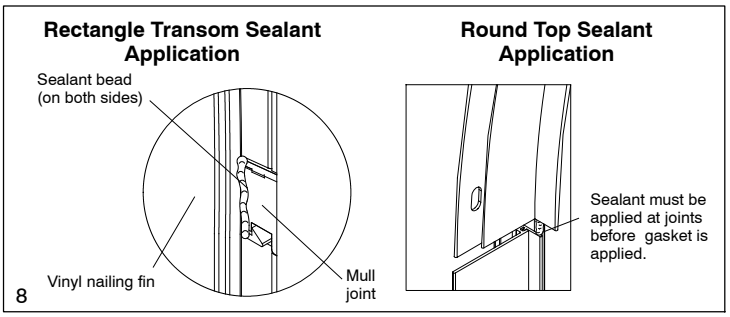

11. Apply any jamb extension if applicable.
12. Next apply masonry brackets (six per side) centering over the mulling tin as shown in illustration 9. Secure to the frame using the #7 x 5/8″ flathead screws (two per clip).

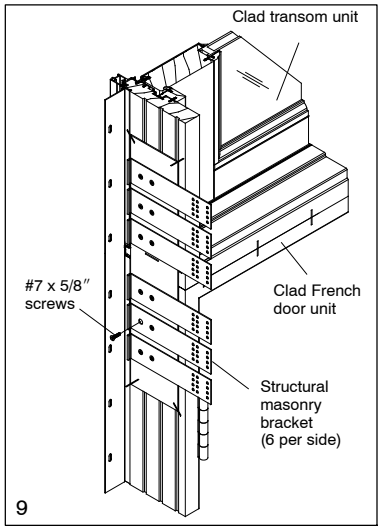
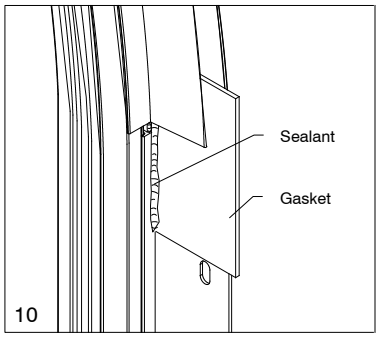
13. If applicable (Round Tops only), position connector gasket under the flexible leg on the round top head jamb nailing fin at side jamb/sill joint and press in place. Corner gaskets are applied directly over the nailing fins. Apply additional sealant. See illustration 10.
14. Follow specific product installation instructions.