KD Wood Sliding French Door

Assembly Instructions

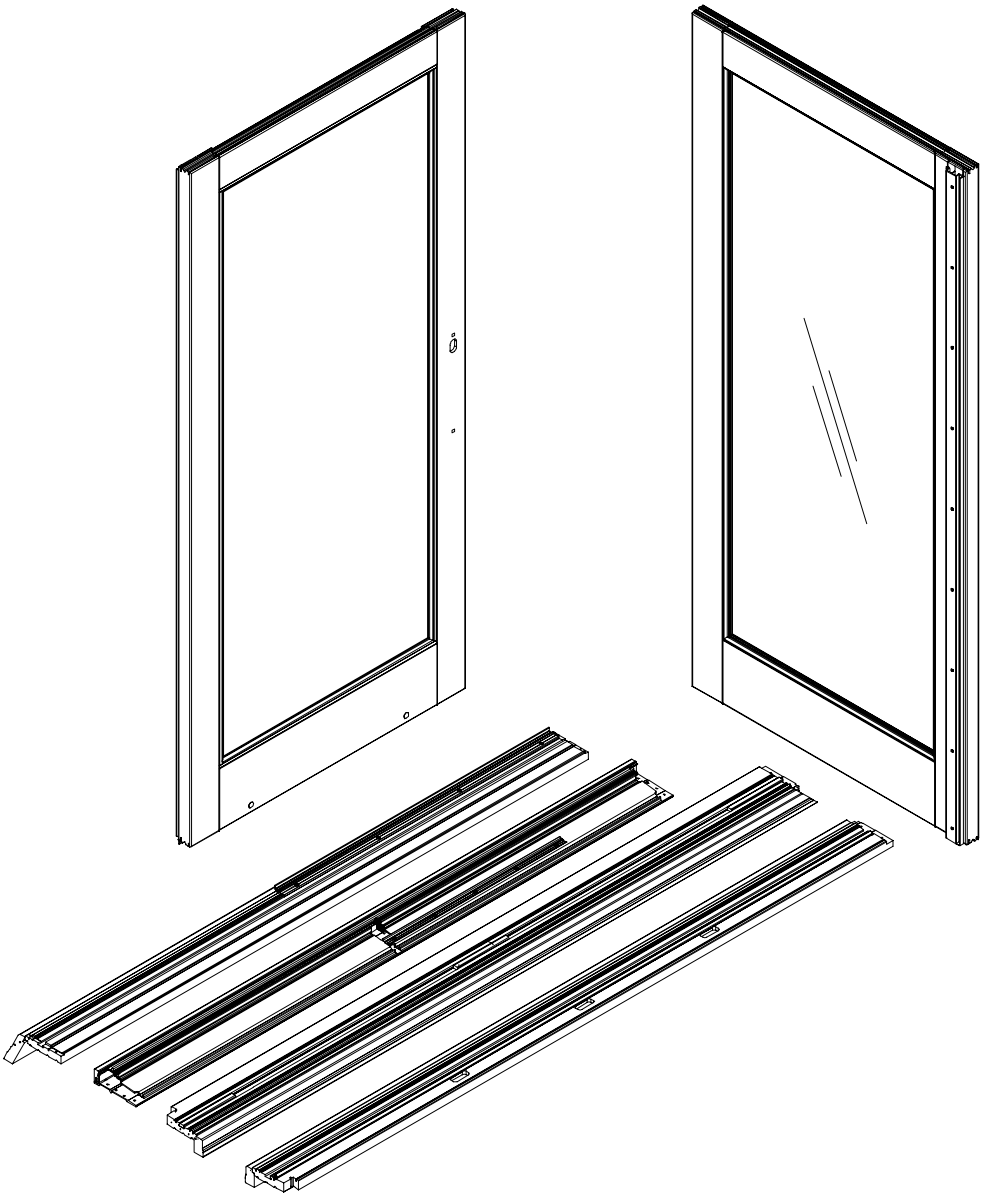

MARVIN®
Windows and Doors

Made for you.®

12/21/2006
19970016

BEFORE YOU BEGIN

IMPORTANT! Read these instructions thoroughly before beginning to assemble your KD (knocked down) Wood Sliding French Door. In addition, after assembly is completed, it is important to follow the installation instructions provided. Failure to assemble as recommended will void any warranty, written or implied.

CAUTION: Large door units may require more than one person to assemble the unit. Adequate help for the size of unit being assembled is required.

WARNING: Practice safety! Wear safety glasses or goggles when assembling a Marvin window or door product.

CONFIGURATIONS

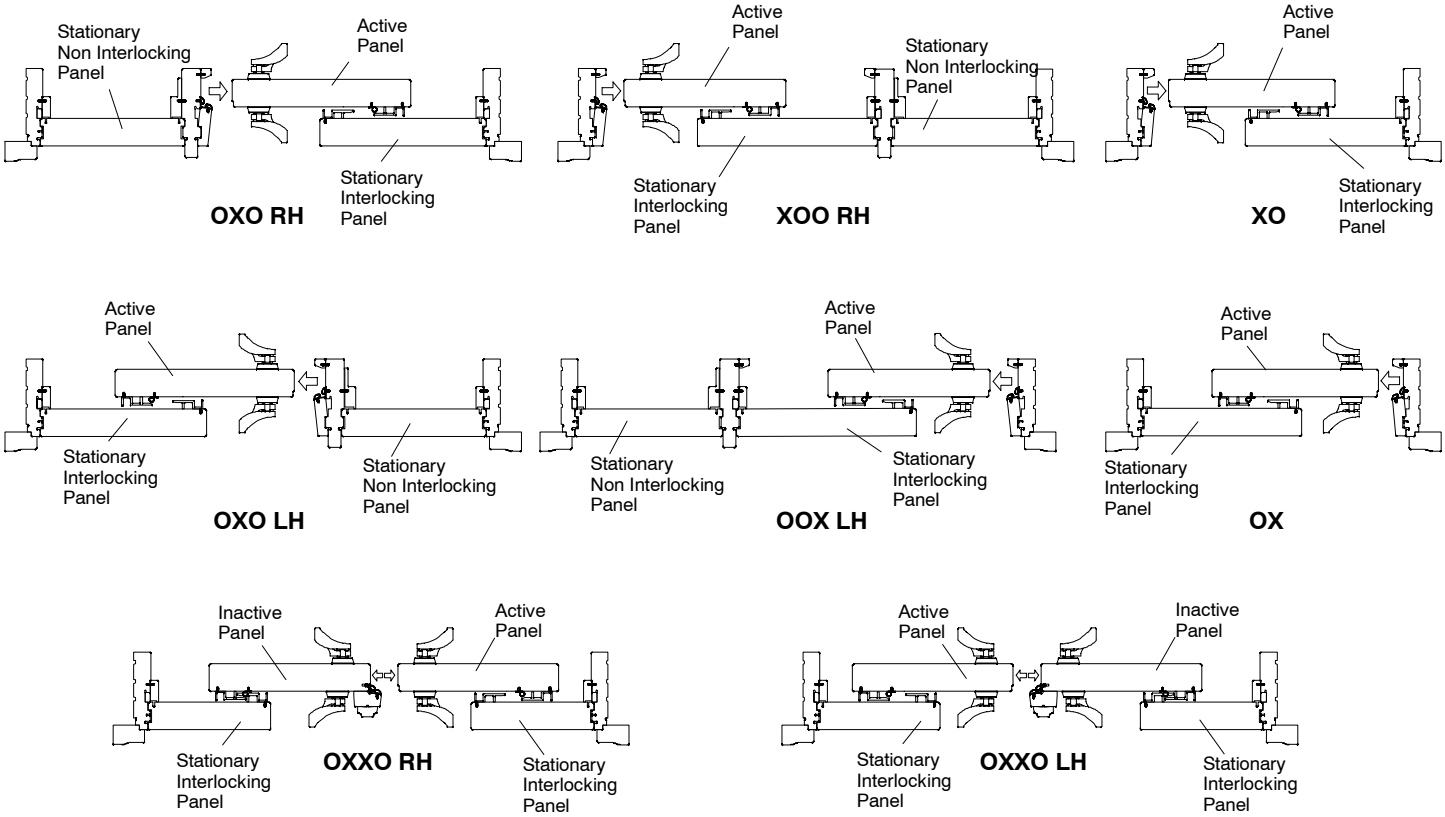

YOU WILL NEED TO SUPPLY

Safety glasses	#2 Phillips screwdriver
Tape measure	Hammer
1 1/2″ Finish nails	Rubber mallet
Drill	Wood block
Nail set	Utility knife
3/32″ Drill bit	Step ladder
Isopropyl Alcohol	
Grade NS 25 sealant per ASTM C920	

REPLACEMENT PARTS

If replacement parts are needed, please contact your local Marvin Windows and Doors dealer. Whenever possible, provide a part or profile number.

STANDARD PARTS SHIPPED WITH KD WOOD SLIDING FRENCH DOOR

2-wide assemblies include: 1-head jamb, 1-sill, 2-side jambs, 1 - active panel, 1 - interlocking stationary panel.

3-wide assemblies include: 1-head jamb, 1-sill, 2-side jambs, 1 - active panel, 1 - interlocking stationary panel, l - center jamb, 1 - non-interlocking stationary panel.

4-wide assemblies include: 1-head jamb, 1-sill, 2-side jambs, 1 - active panel, 1 - inactive panel, 2 - interlocking stationary panels.

NOTE: Numbers listed in parentheses ( ) are metric equivalents in millimeters rounded to the nearest whole number.

ATTENTION: Specifications and technical data are subject to change without notice.

ILLUSTRATION *NOT TO SCALE*	DESCRIPTION	PART/PROFILE NUMBER
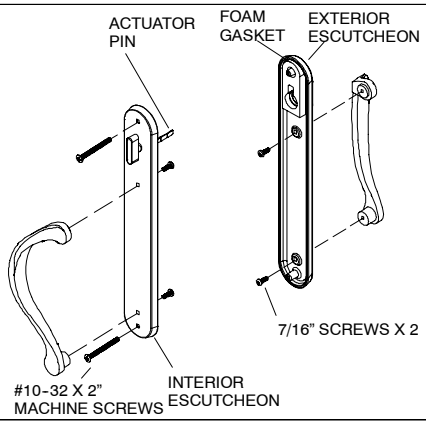	**Handle, Non-Keyed**	Refer to Marvin Parts Manual
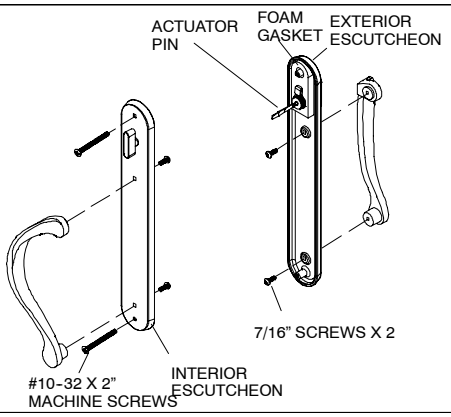	**Handle, Keyed**	Refer to Marvin Parts Manual
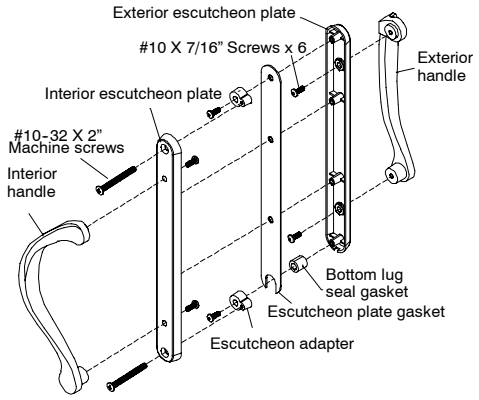	**Handle, Inactive** 4 Wide only	Refer to Marvin Parts Manual

Your KD Door should come with the following parts. Please check the quantities and contact your local Marvin representative if problems.

ILLUSTRATION *NOT TO SCALE*	DESCRIPTION	PART/PROFILE NUMBER	QUANTITY
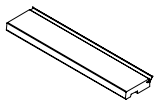	**Wood Head Jamb Part Stop with Vinyl Weather Strip**	W6535 V795	2 Panel – 1 3 Panel – 1 4 Panel – 1
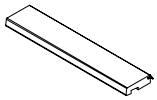	**Wood Side Jamb Part Stop with Vinyl Weather Strip**	W6535 V795	2 Panel – 1 3 Panel – 1 4 Panel – N/A
	Wood Stationary Jamb Cover with Vinyl Connecting Barb	W7535 V803	2 Panel – 1 3 Panel – 2 4 Panel – 2
	Wood Jamb Liner with Vinyl Connecting Barb	W7536 V803	2 Panel – 1 3 Panel – 1 4 Panel – N/A

ILLUSTRATION *NOT TO SCALE*	DESCRIPTION	PART/PROFILE NUMBER	QUANTITY
	Center Jamb Cover with Vinyl Connecting Barb	W7536 V803	2 Panel – N/A 3 Panel – 1 4 Panel – N/A
	Wood Stationary Panel Cover with Dust Block *Dust block for interlocking stationary panel only (as shown)*	W7504	2 Panel – 1 3 Panel – 2 4 Panel – 2
	Vinyl Condensation Cover with Dust Block *Dust block for interlocking stationary panel only (as shown)*	V1131	2 Panel – 1 3 Panel – 2 4 Panel – 2
	Foam Backer Rod	10500204	One lineal length
	Aluminum Header Guide with Wood Cover	A1014 W8040	2 Panel – 1 3 Panel – 2 4 Panel – 1
	Roller Adjustment and Bumper Block Plug	01060619	2 Panel – 4 3 Panel – 4 4 Panel – 8
	Head Jamb Bracket	11860212	2 Panel – 1 3 Panel – 2 4 Panel – 2
	Side Jamb Bracket	11841000	2 Panel – 4 3 Panel – 8 4 Panel – 8
	Wood Sliding Patio Door Installation Instructions	11708232	One per door

You will receive one of the following based on what type of screen or if no screen was ordered.			
	Standard Screen Track	A1070	2 Panel – 1 3 Panel – 2 4 Panel – 2
	Ultimate Screen Track	A777	2 Panel – 1 3 Panel – 2 4 Panel – 2
	Wood Screen Track Filler	W5221	2 Panel – 1 3 Panel – 2 4 Panel – 1
	Screen Bumper Block (Ultimate only)	02540665	2 Panel – 1 3 Panel – 1 4 Panel – 2
	Screen Stop and Sill Strike Package	05700030	2 Panel – N/A 3 Panel – N/A 4 Panel – 1

For installation of your KD Sliding French Door, you will need a variety of screws. The quantity and type will be based on what configuration you have ordered. With your KD Sliding French Door you have received one of the following packages, determine which package matches your door by the description of the package.

		Quantity		
	Description	**2 Wide Unit Package Part Number 11800661**	**3 Wide Unit Package Part Number 11800662**	**4 Wide Unit Package Part Number 11800663**
A	#7x2″ Flat Head Screw	**10 Total** 6 - jamb to header 2 - header to jamb 2 - BMC to BMC (wood)	**10 Total** 6 - jamb to header 2 - header to jamb 2 - BMC to BMC (wood)	**10 Total** 6 - jamb to header 2 - header to jamb 2 - BMC to BMC (wood)
B	#8x3″ Flat Head Screw	**4 Total** 2 - BMC to BMC (wood) 2 - sill to casing (wood)	**7 Total** 2 - BMC to BMC (wood) 2 - sill to casing (wood) 3 - center jamb	**4 Total** 2 - BMC to BMC (wood) 2 - sill to casing (wood)
C	#8x1 1/2″ Flat Head Screw	**7 Total** 3 - stationary panel cover 2 - head jamb to jamb (clad) 2 - sill to jamb (clad)	**10 Total** 6 - stationary panel cover 2 - head jamb to jamb (clad) 2 - sill to jamb (clad)	**10 Total** 6 - stationary panel cover 2 - head jamb to jamb (clad) 2 - sill to jamb (clad)
D	Corner Keys (clad only)	**2 Total** 2 - top corner of frame (clad)	**2 Total** 2 - top corner of frame (clad)	**2 Total** 2 - top corner of frame (clad)
E	#8x3″ Pan Head Screw	**10 Total** 6 - sill to jamb	**6 Total** 6 - sill to jamb	**6 Total** 6 - sill to jamb
F	#8x1 1/2″ Pan Head Screw	**4 Total** 2 - bumper block 2 - sill liner to jamb	**5 Total** 2 - bumper block 2 - sill liner to jamb 1 - sill liner to center jamb	**6 Total** 4 - bumper block 2 - sill liner to jamb
G	Sill Gasket (pair)	**1 Total** 1 - sill to frame	**2 Total** 1 - sill to frame 1 - sill to center jamb	**1 Total** 1 - sill to frame
H	#8x1″ Flat Head Screw	**8 Total** 4 - panel guide to head jamb 2 - head jamb bracket to interlock panel 2 - head jamb bracket to head jamb	**16 Total** 8 - panel guide to head jamb 4 - head jamb bracket to interlock panel and non interlock panel 4 - head jamb bracket to head jamb	**16 Total** 8 - panel guide to head jamb 4 - head jamb bracket to interlock panel 4 - head jamb bracket to head jamb
I	Bumper Block	**2 Total** 2 - head and sill	**2 Total** 2 - head and sill	**4 Total** 4 - head jamb and sill
J	Rubber Bumper	**2 Total** 2 - bumper block	**2 Total** 2 - bumper block	**4 Total** 4 - bumper block
K	#7x5/8″ Self Tapping Screw	**6 Total** 4-6 - screen track	**6 Total** 4-6 - screen track	**12 Total** 12 - screen track
L	#7x5/8″ Flat Head Screw	**8 Total** 8 - side jamb bracket to jamb	**16 Total (OOX or XOO)** 8 - side jamb bracket to center jamb 8 - side jamb bracket to jamb (OXO 16 - side jamb bracket to jamb)	**16 Total** 8 - side jamb bracket to left jamb 8 - side jamb bracket to right jamb
M	#7x3/4″ Flat Head Screw	**8 Total** 8 - side jamb bracket to interlock panel	**8 Total** 8 - side jamb bracket to interlock panel	**16 Total** 8 - side jamb bracket to left interlock panel 8 - side jamb bracket to right interlock panel

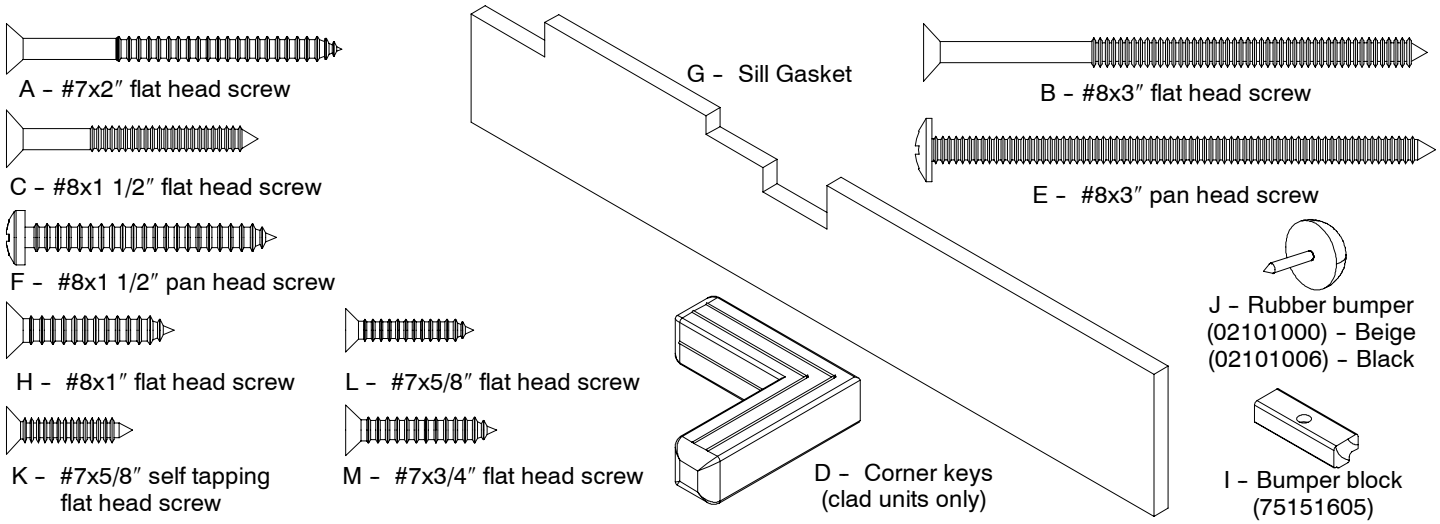

ASSEMBLING THE DOOR FRAME

1. Lay the side jambs, head jamb and sill on a flat, level surface exterior facing down.
2. Fasten the corners of top brick mould casing through the predrilled holes using “B” #8X3″ and “A” #7x2″ Phillips flat head screws. See illustration 1.
3. Attach head jamb to side jambs using “A” #7X2″ Phillips flat head screws. See illustration 1. Repeat for the second jamb.

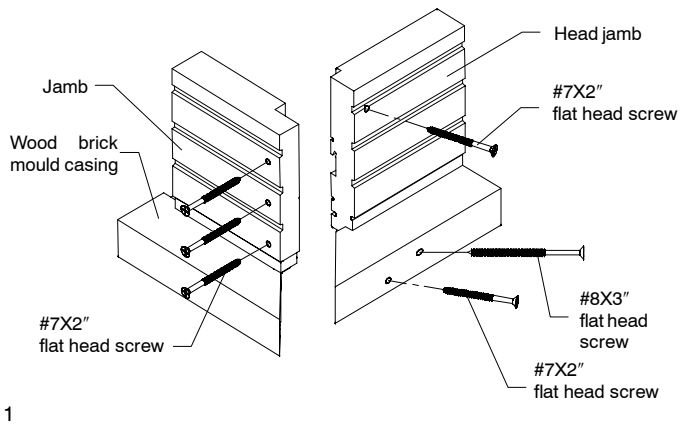

1

4. Apply the sill gasket to the bottom of the jamb. Index gasket from the front of the casing, and allow it to overhang by 1/32″ on rough opening side. Wrap the gasket up the interior side of the jamb. See illustration 2.
5. Apply a 3/16″ (5) bead of sealant across the notch in the frame. See illustration 2.

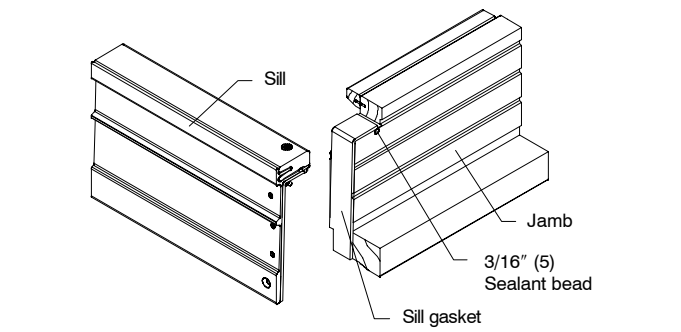

2

6. In order to apply the sill to the jamb, first remove the tape liner from the sill gasket. Spray a light mist of alcohol onto the sill where the gasket will be attached. Make sure sill area is clear of dust and debris before spraying with alcohol.
7. Ensure the interior side of the jamb is completely butted against the sill. See illustration 3.

   NOTE: To prevent water leaks, be certain the jamb is aligned with the sill liner and butted against the sill.

8. Drill with a 3/32″ bit through the predrilled hole in the sill liner into the jamb. Fasten the sill liner to the jamb with a “F” #8 X 1 1/2″ Phillips pan head screw.
9. Predrill with a 3/32″ bit into the side jamb through the predrilled holes in the sill. Beginning with the hole closest to the sill liner, fasten the sill to the side jamb with “E” #8 X 3″ Phillips pan head screws. Fasten the sill to the BMC with “B” #8 X 3″ Phillips flat head screw.

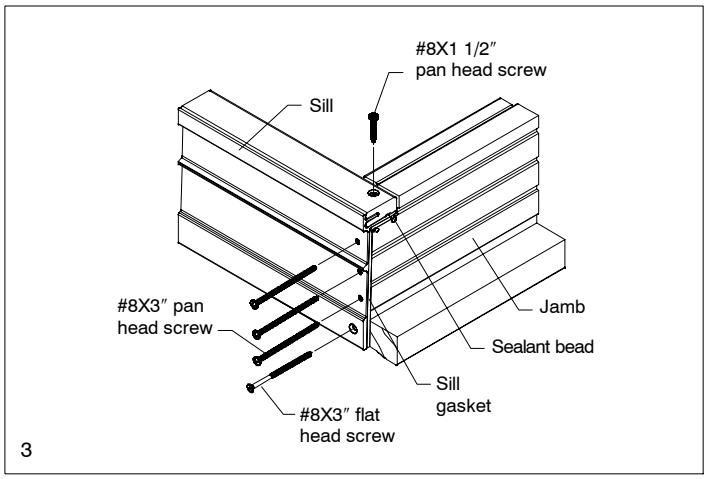

3

INSTALLING STATIONARY PANEL(S)

NOTE: For ease of installation, temporarily install frame into the opening. Fasten the two top corners to the structure.

WARNING: Stationary Panel is heavy, take care not to let the panel fall forward. Assistance is recommended for this procedure.

10. Fasten 3 (4 on 8-0 Ht.) side jamb brackets to the jamb side of the interlock and/or stationary panel through the predrilled holes with “M” #7x3/4″ flat head screws. See illustration 4a.
11. Fasten Stationary head jamb bracket to the interlock panel through the predrilled holes with “H” #8x1″ flat head screws. See illustration 4b .

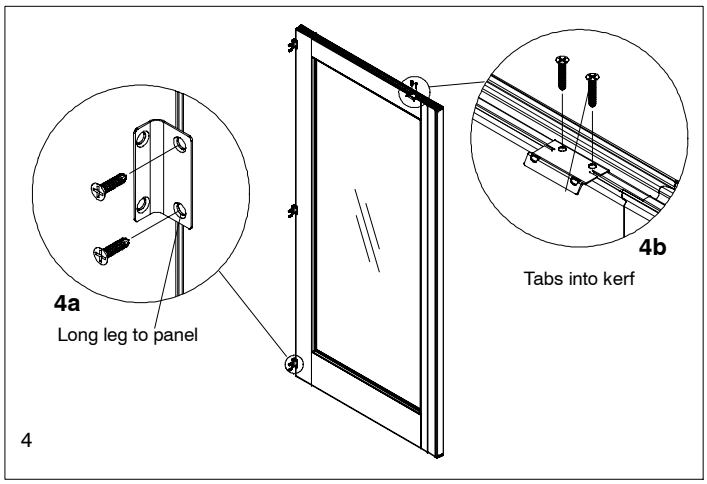

4

12. From the interior place the stationary panel(s) 6″ away from the jamb at an approx. 75 degree angle. For 3 wide units install non-interlocking panel first followed by the stationary interlocking panel. See illustration 5.

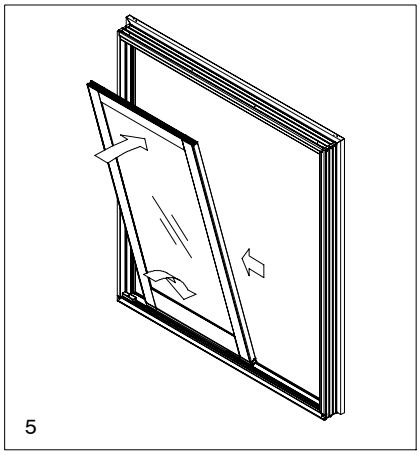
5

13. Push the bottom of the panel outward and gradually tilt panel to the upright position. Press the panel outward ensuring that the flange on the panel leveling block has fully seated into the sill clip and slide panel to the side jamb. See illustration 6.

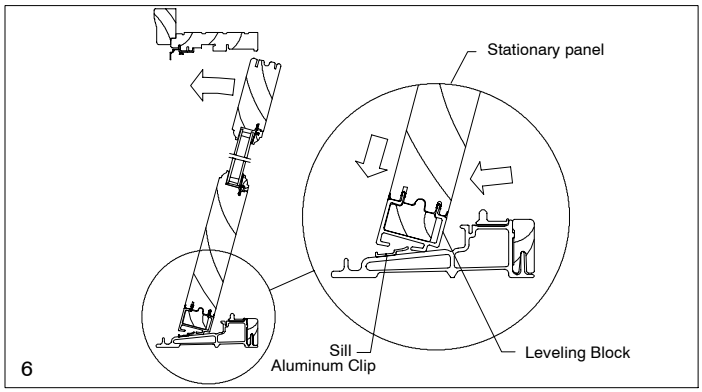

14. Fasten the interlock (and stationary panel) side jamb brackets to the side jamb with two "L" #7x5/8″ flat head screws per bracket. See illustration 7.

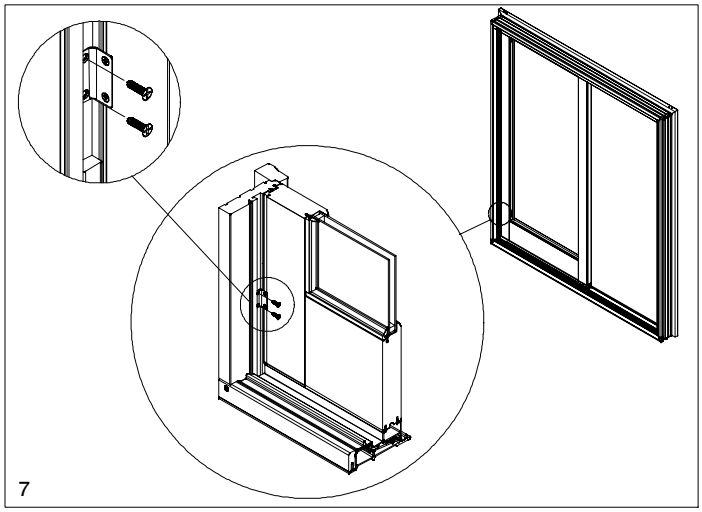

15. Use a stiff putty knife to bend the head jamb bracket into place. See illustration 8. Fasten the head jamb bracket to the head jamb with two "H" #8x1″ flat head screws placed at a 45° angle. See illustration 8. For two wide units proceed to step 17.

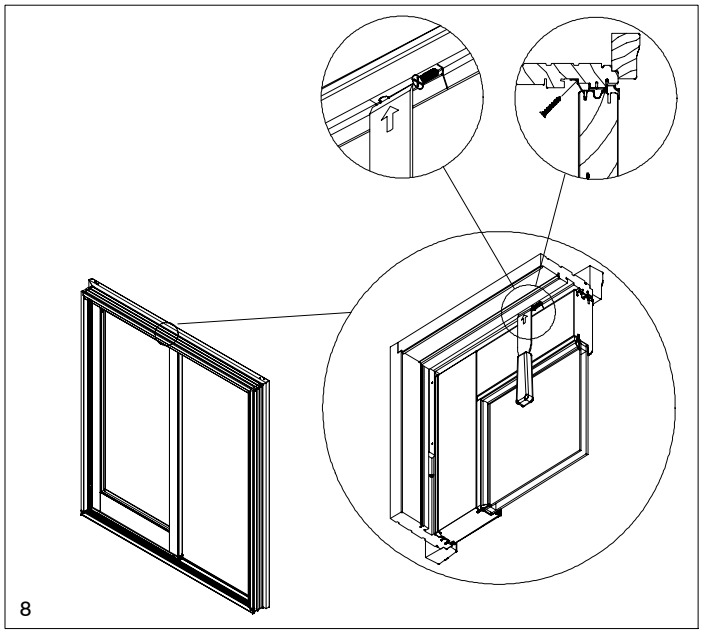

16. For three wide units place center jamb in slot on sill shown in illustration 9. Tap center jamb onto stationary panel with a rubber mallet. Fasten with a "B" #8x3″flat head screw through the center of the center jamb. Finish tapping the center jamb onto stationary panel to ensure that it is tight. Complete attaching the center jamb to the stationary panel with "B" #8x3″ flat head screws 6″ from the top and the bottom as shown in illustration 10. Repeat steps 10–15 for stationary inter-locking panel.

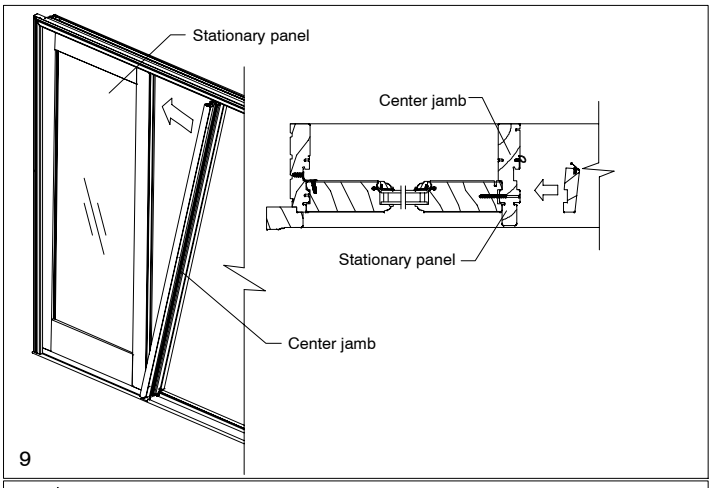

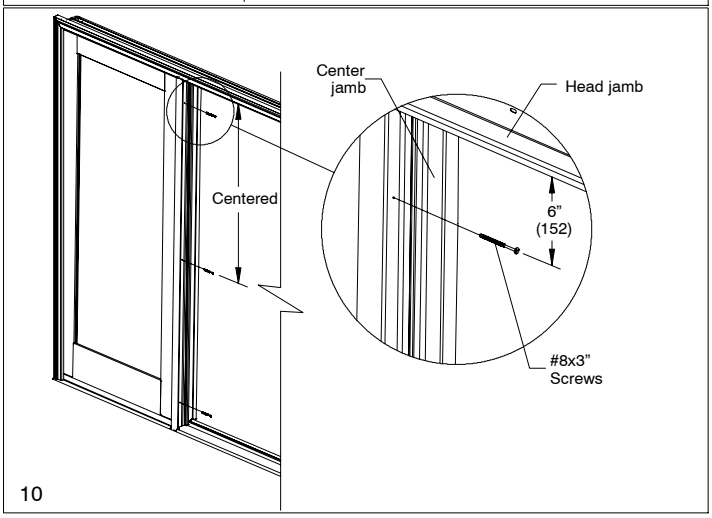

17. Place dust block end of condensation cover(s) under interlock and slide into place. Tap until seated with a wood block and rubber mallet. See illustration 11.

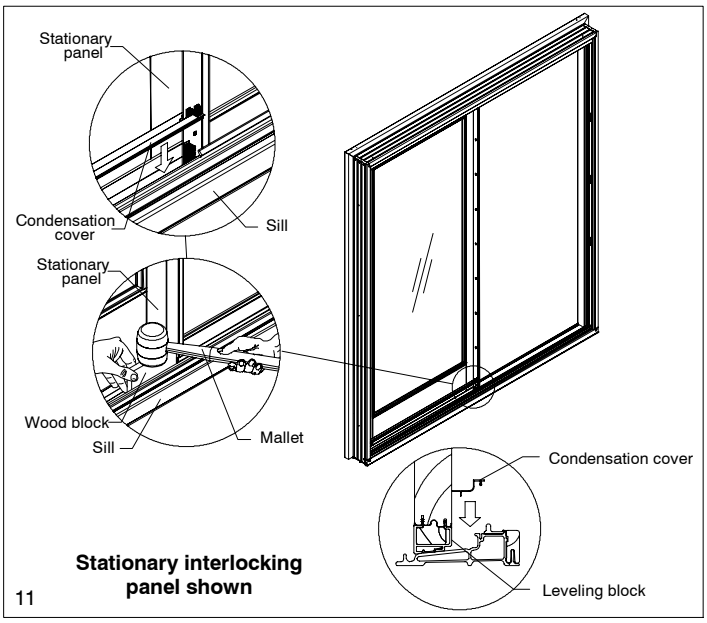

Stationary interlocking panel shown

18. Apply a 3/16″ to 1/4″ bead of sealant over the condensation cover and up the jamb 8-10″. See illustration 12. Also apply sealant on the non interlocking side of the center jamb for OXO units. Apply to both sides of the center jamb if XOO or OOX configurations.

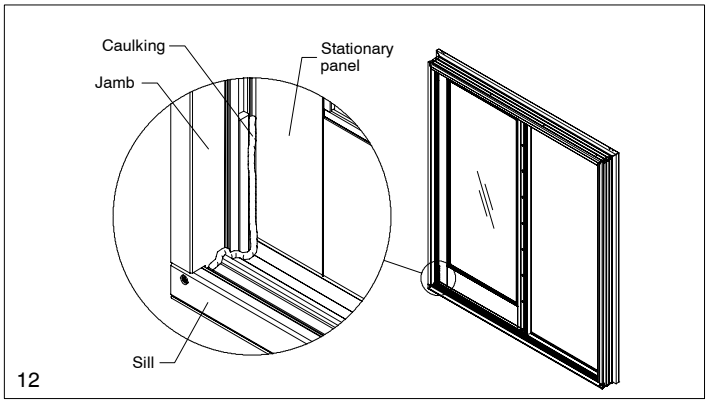

19. Cut the length of the backer rod the width of the stationary panel. Insert the backer rod between the top rail and the head jamb. Notch out backer rod around head jamb bracket. See illustration 13.

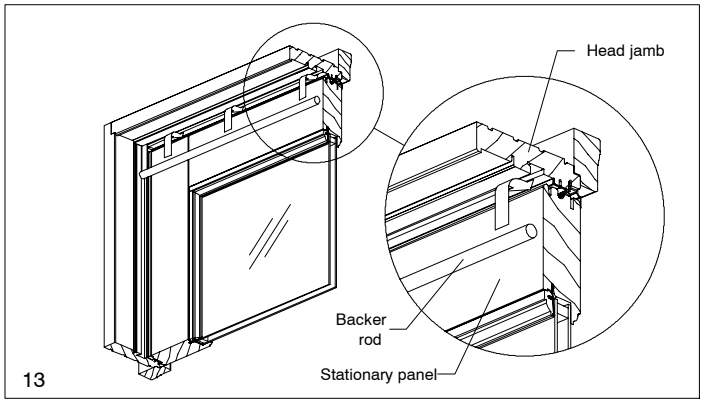

20. Attach jamb cover(s) as shown in illustration 14. For additional jamb cover locations see unit configurations on page 2.

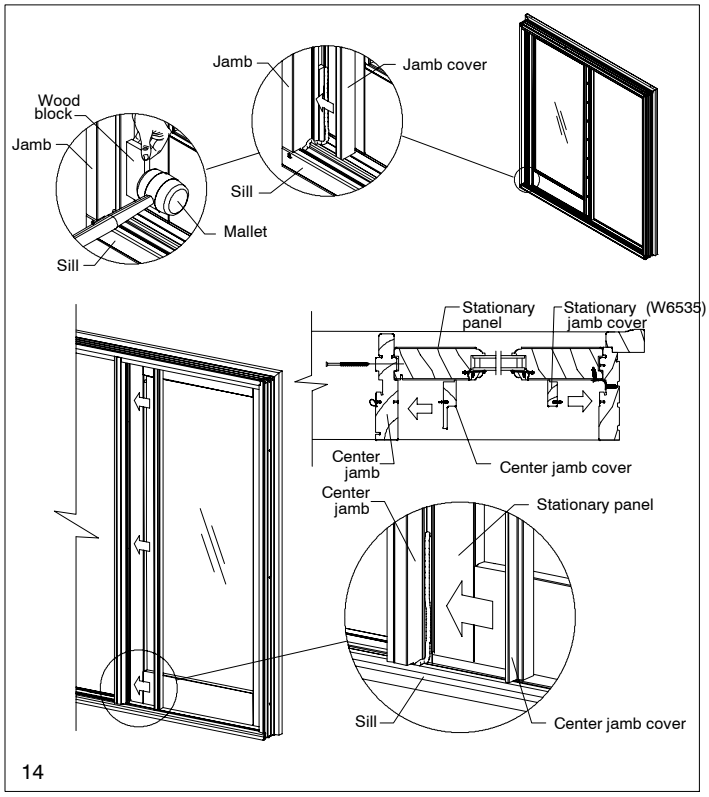

21. Insert stationary panel cover dust block end over interlock and slide into place. Fasten the stationary cover into the head jamb with “C” #8X1 1/2″ screws into the predrilled holes. See illustration 15.

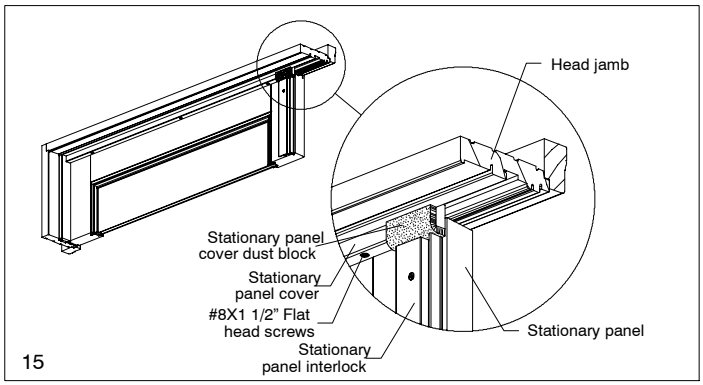

22. Place the bumper block against stationary jamb. Pre-drill with 3/32 drill bit into sill fasten with “F” #8X1 1/2″ pan head screw. See illustration 16.

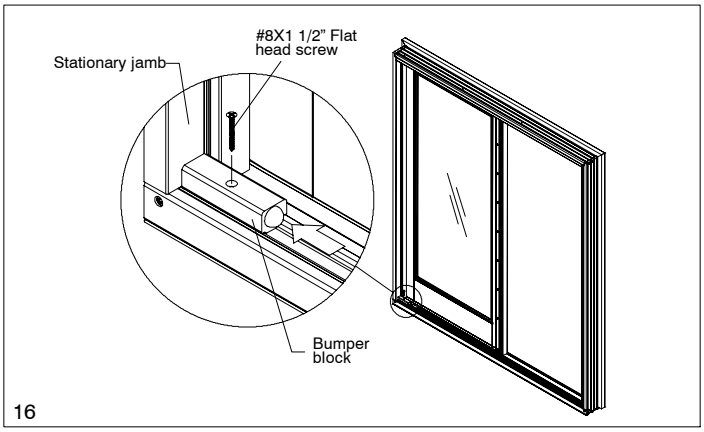

23. Install head jamb part stop followed by the jamb part stop. See illustration 17.

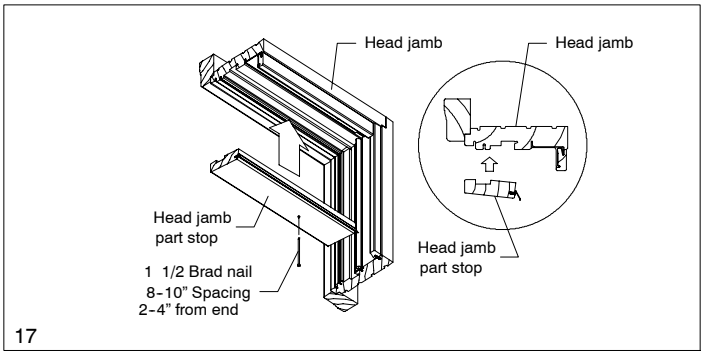

WOOD SCREEN TRACK FILLER INSTALLATION

24. Place wood screen track filler up against exterior casing and fasten with 1 1/2″ brad nails every 8″ (203). See illustration 18.

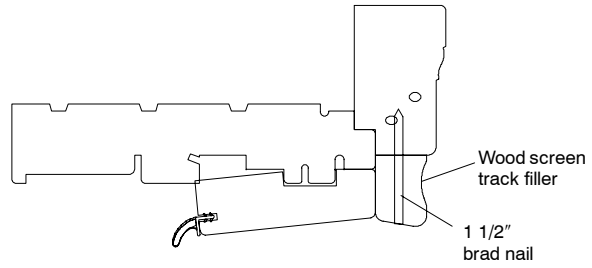

18

25. Refer to the Wood Sliding French Door Installation Instructions to complete the installation and assembly of the door. The Sliding French Door Installation Instructions will include the proper installation of the inactive panel (for 4 panel doors) and active panel (for all doors) and will take into account the placement of the header guide with wood cover, the head jamb bumper block with rubber bumper, and the wood plugs included in your KD package.

SCREEN TRACK INSTALLATION

26. Place the screen track up into the head jamb above the active panel(s) and interlocking panel(s). Fasten the track to the head jamb with #7X5/8″ self tapping flat head screws "K" through the pre-drilled holes in the screen track. The screen bumper is applied to the Ultimate screen only. See illustration 19.

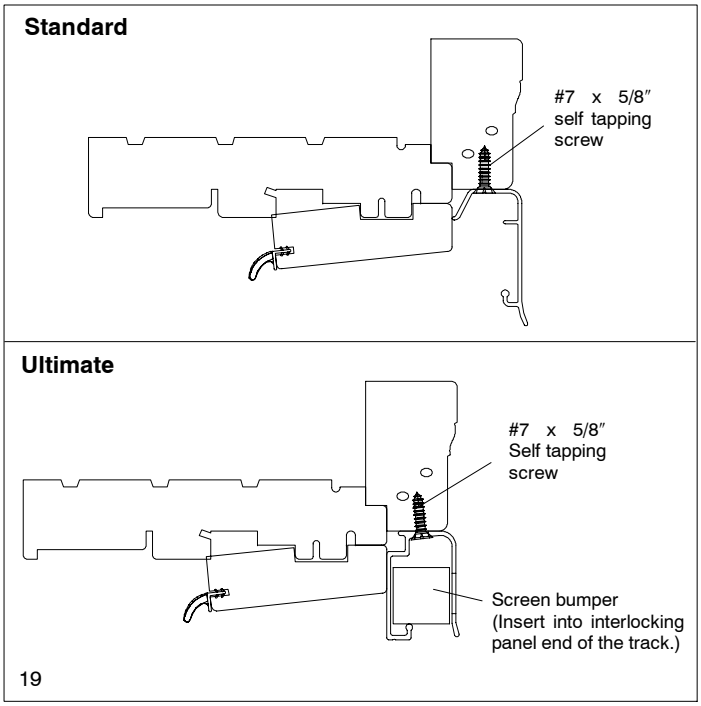

19

NOTE: The screen instructions will cover the proper installation of the screen onto the track.

NOTE: The Sliding French Door Installation instructions will cover the proper installation of the active panel and the unit into the opening. Separate installation instructions are also provided with the handle and the screen.