# Magnum Tilt-Turn, Hopper, Inswing Casement, and Round Top Tilt-Turn Hardware Adjustment Instruction

## Tilt-Turn Hinge Adjustments

*Note: The single most important step in the procedure of installing a Magnum Tilt-Turn, Hopper, or Inswing Casement window is to assure that the frame is square and the sash is installed square to the frame.*

1. Prior to making any adjustments, check the location of the bar (located on the sash) and strike (located on the frame). If the bar fits into the strike with ease, make no adjustments.
2. If the bar does not fit into the strike it will be necessary to make hardware adjustments.
3. If the sash bar is too low and the sash is not square in the frame, use the top and bottom hinge adjustments to square the sash in the frame.

### Adjusting the Top Hinge

4. Locate the adjusting screw of the top hinge. It is visible with the sash in the 90 degree position.
5. Turning the screw clockwise with the 4mm wrench will shorten the arm and raise the handle side of the sash. Conversely, turning the screw counterclockwise will lengthen the arm and lower the handle side of the sash. See illustration 1.

*Note: Inswing Casement adjustment is similar to that shown in illustration 1.*

***Important: Make adjustments gradually, checking the bar and strike often, to see if they are in position.***

6. If the sash bar is still too low and the sash is square in the frame, raise the sash by adjusting the bottom hinge. Proceed to step 7.

### Adjusting the Bottom Hinge

7. It is possible to raise or lower the bottom hinge by adjusting the hinge with a 4mm Allen wrench. Using the 4mm Allen wrench, gradually turn the screw clockwise to raise the sash or counterclockwise to lower the sash. Check the bar and strike position often. See illustration 2 (A).
8. To adjust the sash from left to right, locate the adjusting screws found at the base of the bottom hinge. Depending on access to the hinge, turn the adjusting screw with the 4mm Allen wrench clockwise to draw the sash to the right. Turn the adjusting screw counterclockwise to draw the sash to the left. See illustration 2 (B).

*Note: Illustration shows adjustment screw on the right. If access to the adjustment screw is on the left, adjustment direction will be reversed (e.g. turn clockwise to draw sash to the left).*

9. Make adjustments gradually and check the bar and strike often to see if they are in position.

*Note: It may be necessary to reverse the above procedures if you have done too much adjusting.*

### Adjusting Weatherstrip Contacts

*Note: Step 11 does not apply to Round Top Tilt-Turn units.*

### Bottom Contacts

10. To adjust the bottom weatherstrip contact, insert the 2.5 mm Allen wrench into the adjustment screw located on the front of the bottom hinge. Turning the screw clockwise will tighten the contact; turning the screw counterclockwise will loosen the contact. See illustration 2 (C).

### Top Contacts

11. To adjust the top weatherstrip contact, insert the 4mm Allen wrench into the adjustment screw located at the bottom side of the top hinge. Turning the notch on the adjusting screw to the interior will loosen the contact; turning the notch on the adjusting screw to the exterior will tighten the contact. See illustration 3.

*Note: Inswing Casement adjustment is similar. Weatherstrip contact adjustment screw is found on top of hinge.*

## Round Top Tilt-Turn/Inswing Casement Hinge Pin Removal Top/Center Hinges

*Note: The following steps are necessary in removing Round Top Tilt-Turn, and Inswing Casement top/center hinges.*
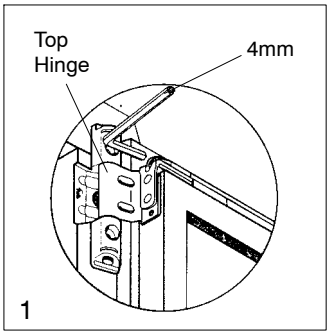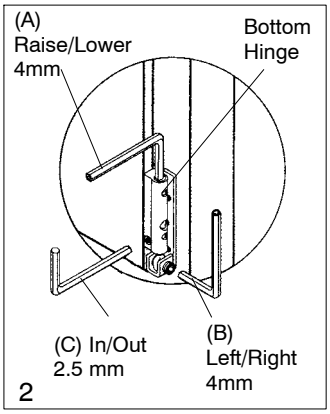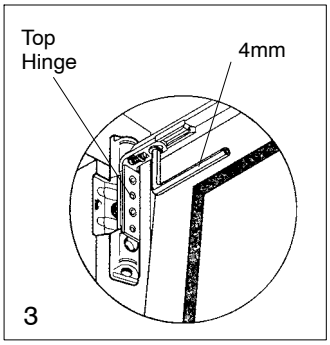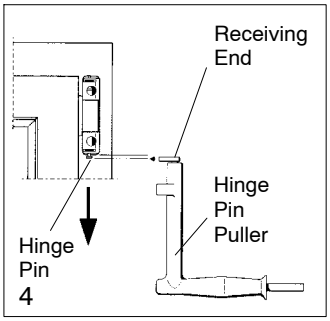
1. Remove the hinge pin from the top or center hinge by sliding the receiving end of the hinge pin tool over the flat end of the hinge pin.
2. When the hinge pin is fully engaged in the hinge pin tool, pull down firmly to extract the pin. See illustration 4.