Ultimate Swinging French Door
Supplemental Installation Instruction

The following supplemental instruction applies to:

- Clad and Wood Ultimate Inswing French Door (includes 2 1/4" panels)
- Clad and Wood Ultimate Outswing French Door (includes 2 1/4" panels)

WARNING

Practice safety! Wear safety glasses or goggles and appropriate hearing protection.

Standard Parts Shipped:

Each Marvin Swinging Door is sent with a handle set, hinge screw package and strike screw package. Clad units include a nailing fin corner gasket package.

If any of these parts are missing, contact your local Marvin dealer for replacement parts information.

Permanently Securing the Door

After your Marvin Swinging Door is installed into the rough opening, perform the following steps to permanently secure the door.

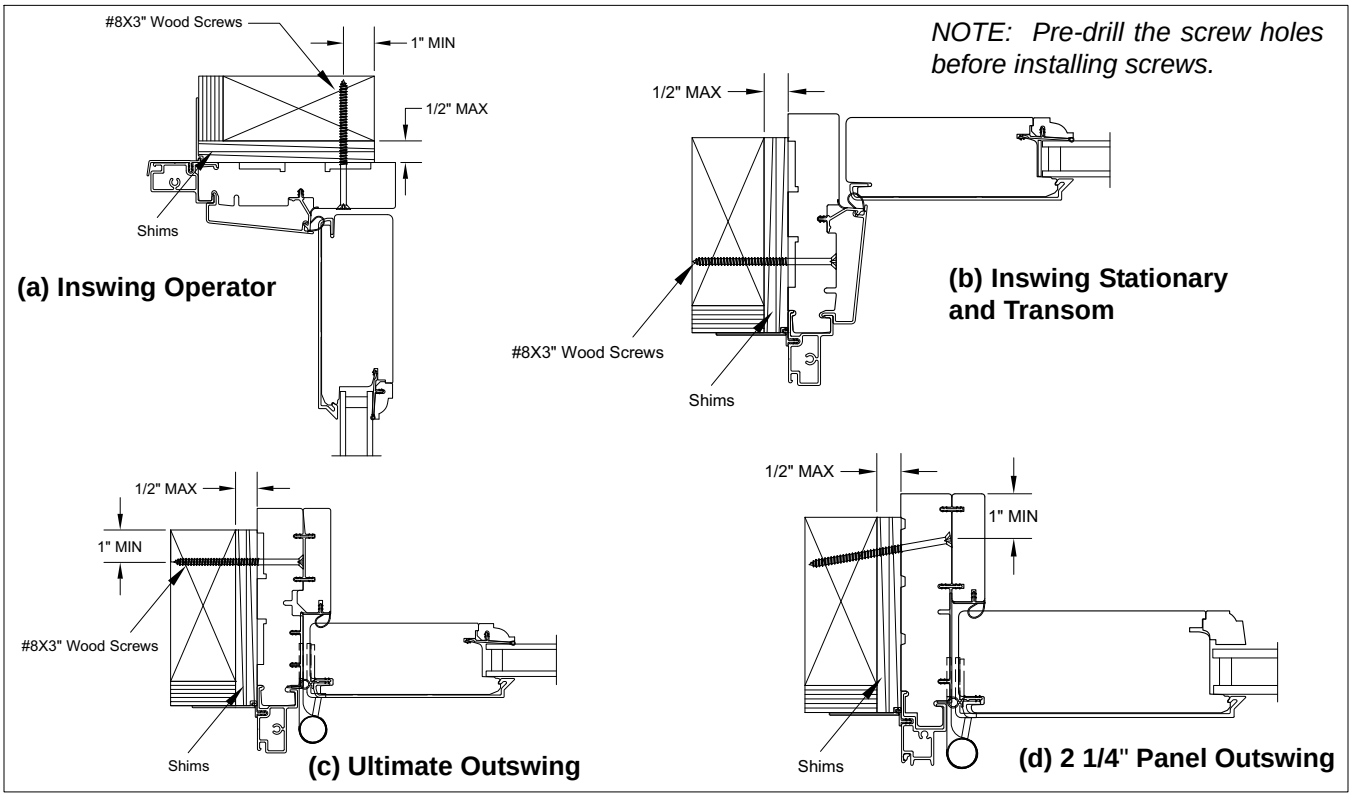

Figure 1

1. **For units utilizing jamb screw installation (wood and clad):** Once the unit has been properly shimmed, plumbed, and squared fasten unit to wood buck/rough opening with minimum diameter of a #8 wood screw. Length of jamb screws may vary depending on type of unit, location and operation of the panel with a minimum buck penetration of 1 1/4" (32). A minimum jamb screw length of 3" (76) is required. Screws must be a minimum of 1" (25) from edge of buck. Place the screw 6" (152) from each corner, maximum 12" (305) on center, with a minimum of 2 per side. See figure 1 for fastening detail and page 3 for exterior stop removal instructions.

2. **For units utilizing masonry clip and structural bracket installation (wood and clad):** Refer to the installation instructions included with the clips/ brackets.

IMPORTANT

2 1/4" panel doors and IZ3 installations require provided long screw to be installed through the hinge into the studwall for all hinges.

NOTE: All doors shown are Clad Ultimate Inswing French Doors (CUIFD) except as otherwise noted.

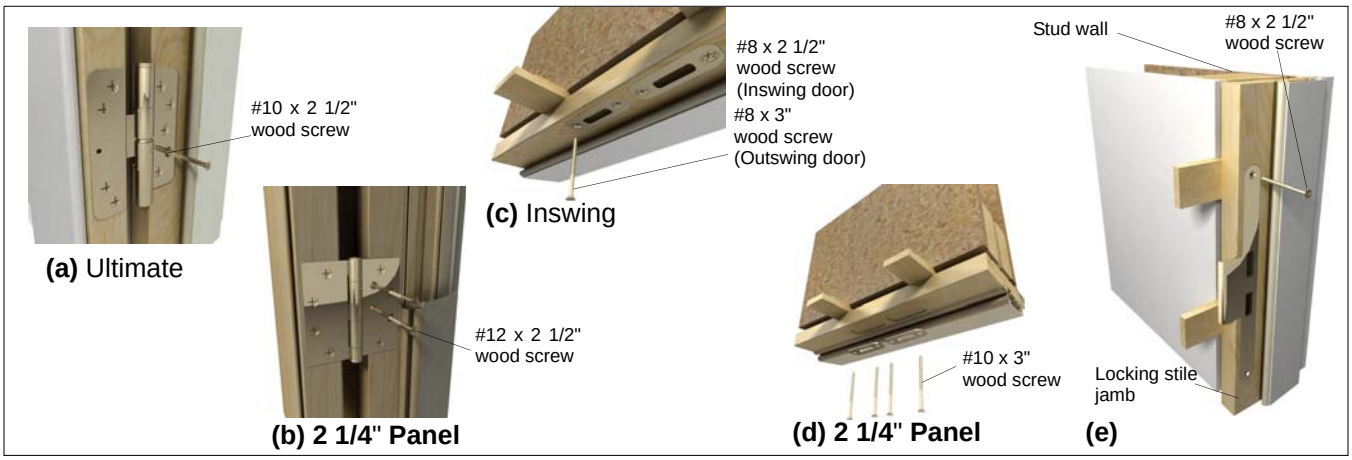

Figure 2 (Inswing shown but applies to Outswing doors as well.)

3. On all operating panels, install a provided #10 x 2 1/2" screw (two #12 x 2 1/2" screws for ball bearing hinges and all 2 1/4" doors) into hinges as shown in figure 2a and figure 2b.

4. On all side jamb and head jamb strike plates, remove and replace screws fastening the strike to the frame with the longer screws and drive into rough opening frame as shown in figure 2c, figure 2d and figure 2e.

WARNING

If unit has sidelite or transom mulled above, use a 2" or smaller screw to prevent breaking the glass.

5. Close the panel(s) and check the margin between the active and inactive panel or panel and jambs. The door is designed to have a 1/8" (3) gap between the panels. Correct the margin if needed by adjusting the long screw installed in the previous steps.

Proceed to general door instruction for steps on how to secure the sill and final flashing and sealing procedures.

Adjustable Hinge Operation

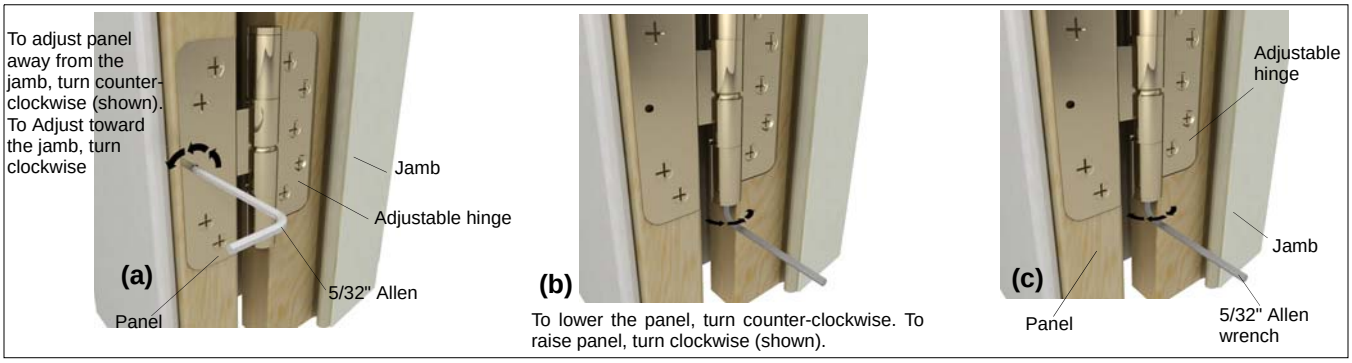

Figure 3

NOTE: If hinges have to be adjusted away from the midpoint of the adjustment range to achieve panel alignment, carefully recheck the frame to ensure it is level/plumb, straight and square. The hinges are primarily for adjustment by the end user after the door has been in use. In some cases the hinges may need to be reset to the center of the adjustment range to correct movement that occurred during shipping/ handling. Adjustable hinges are not intended to compensate for an improperly installed unit.

1. Make horizontal adjustment first. To adjust panel(s) horizontally away from jamb, turn horizontal adjustment screw counter clockwise using 5/32" Allen wrench provided. To move panel toward jamb, turn Allen screw clockwise. See figure 3a. Make any vertical adjustments only after horizontal adjustments are complete.

2. To adjust panel(s) vertically in an upward motion, turn vertical adjustment screw clockwise using a 5/32" Allen wrench provided. To lower panel, turn Allen screw counter-clockwise. See figure 3b,3c.

Remove and Install Clad Stationary and Transom Part Stop

1. Starting at the top of the part stop insert a stiff putty knife or pry bar between the stop and frame. Gently press inward and pry the stop out of the exterior kerf. See figure 4.

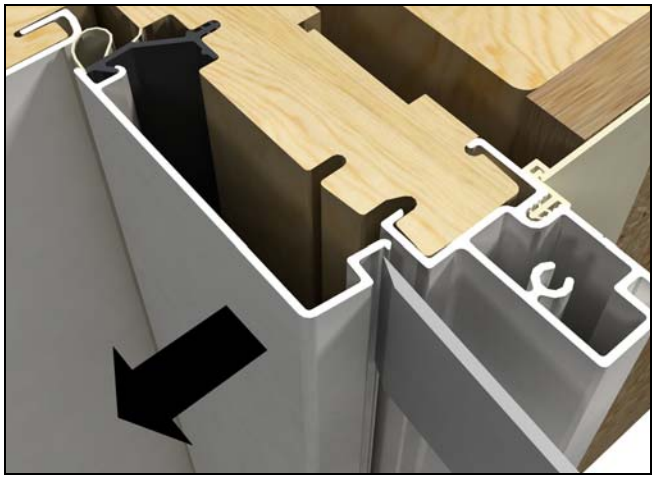

Figure 4

2. Once the outer edge of the stop is loose, insert a pry bar all the way under the stop and pry the stop from the weather strip. See figure 5.

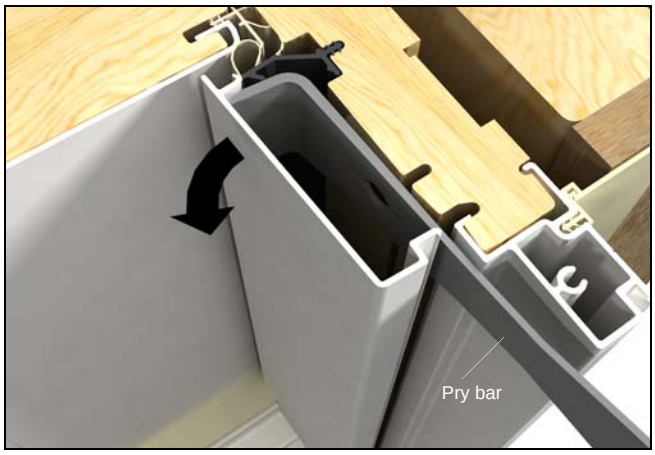

Figure 5

3. To reinstall the stop, slide the stop in at the bottom first between the bottom panel drip cap and jamb. Press the exterior flange of the side part stop into place first and then press the interior side of the stop until you can hear it snap along the entire length of the stop. Tuck the weather strip under the front edge of the stop. See figure 6 and figure 7.

NOTE: During shipping the part stop may slip down. If this happens, we recommend inserting a pry bar between the sill and jamb part stop and gently pulling up on the pry bar to raise the part stop back into place. See figure 6.

Figure 6

NOTE: If you hear a "snap or pop", this does not mean the stop is engaged with the weather strip. Proceed to tuck the weather strip under the stop after it snaps into place. Reference figure 7 for correct and incorrect examples.

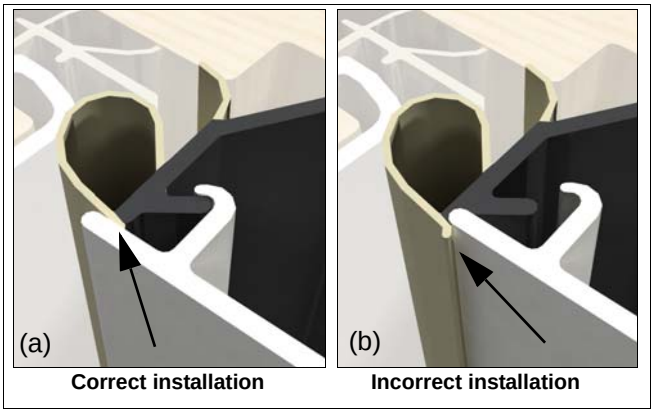

Figure 7 The weather strip needs to be tucked UNDER the part stop. Figure 7a is a correct installation, figure 7b is incorrect.

4. Because the gap between the stationary panel and part stop is at a minimum, Marvin recommends using a small pry bar or siding removal tool (shown) to help pull the weatherstrip into the part stop.

Figure 8 Siding removal tool

Butt Hinge Adjustment

1. Doors equipped with butt hinges have 1/32" shims behind each leaf on all hinges (two shims/hinge). Horizontal panel adjustment is possible by removing or redistributing these shims. See figure 9.

Figure 9

Sill Drainage System

1. The drainage system for the UIFD and UOFD features weep holes just under the exterior face of the sill. For the door to meet the published DP ratings it is important that the drainage system is kept clear of sealant, dirt and debris. See figure 10.

Figure 10