MARVIN
Windows and Doors
Built around you.®

Sliding Doors Series

CE European Technical Manual

CHAPTER 7
Sliding Doors

Clad and Wood Ultimate Sliding French Door

Unit Features – Clad Units 7.2
Unit Features – Wood Units 7.5
Unit Sizing / Measurements – Clad and Wood Units 7.8
Minimums and Maximums – Clad and Wood Units 7.9
Measurement Conversions – Clad Units 7.10
Measurement Conversions – Wood Units 7.15
Section Details 7.21

Clad and Wood Sliding Patio Door

Unit Features – Clad Units 7.29
Unit Features – Wood Units 7.32
Unit Sizing / Measurements – Clad 7.34
Unit Sizing / Measurements – Wood 7.35
Minimums and Maximums – Clad and Wood Units 7.36
Measurement Conversions – Clad Units 7.37
Measurement Conversions – Wood Units 7.39
Section Details 7.41

NOTE:

Specifications and technical data are subject to change without notice.
Illustrations are not to scale.
Allow 2 mm tolerance on all measurements.
For technical assistance about Marvin products call your nearest Marvin distributor or visit our website: www.marvin.com/CE.

NOTE: Thermal Transmittance is calculated on a mid-size product with dual glazed Low E II coating and Argon fill.

Clad Ultimate Sliding French Door OX 6068 – Performance Characteristics

Air Permiability - EN 12207	3
Watertightness - EN 12208	6A
Resistance to Wind Load - EN 12210	A4
Impact Resistance - EN13049	5
Thermal Transmittance - Low EII with Argon	1.7
Radiation Properties - Light Transmittance - Low EII with Argon	0.72
Radiation Properties - Solar Factor - Low EII with Argon	0.45

Clad Ultimate Sliding French Door OXXO 12080 – Performance Characteristics

Air Permiability - EN 12207	3
Watertightness - EN 12208	5A
Resistance to Wind Load - EN 12210	B2
Impact Resistance - EN13049	5
Thermal Transmittance - Low EII with Argon	1.7
Radiation Properties - Light Transmittance - Low EII with Argon	0.72
Radiation Properties - Solar Factor - Low EII with Argon	0.44

Clad Ultimate Sliding French Door Transom – Performance Characteristics

Air Permiability - EN 12207	3
Watertightness - EN 12208	3A
Resistance to Wind Load - EN 12210	A5
Thermal Transmittance - Low EII with Argon	1.8
Radiation Properties - Light Transmittance - Low EII with Argon	0.72
Radiation Properties - Solar Factor - Low EII with Argon	0.45

Clad Ultimate Sliding French Door Direct Glaze Transom Performance Characteristics

Air Permiability - EN 12207	4
Watertightness - EN 12208	E1200
Resistance to Wind Load - EN 12210	E2400C
Thermal Transmittance - Low EII with Argon	1.5
Radiation Properties - Light Transmittance - Low EII with Argon	0.72
Radiation Properties - Solar Factor - Low EII with Argon	0.44

Clad Ultimate Sliding French Door Direct Glaze Transom Performance Characteristics

Air Permiability - EN 12207	4
Watertightness - EN 12208	E1200
Resistance to Wind Load - EN 12210	E2400C
Thermal Transmittance - Low EII with Argon	1.5
Radiation Properties - Light Transmittance - Low EII with Argon	0.72
Radiation Properties - Solar Factor - Low EII with Argon	0.44

Unit Features – Clad Ultimate Sliding French Door

Frame:

- Interior: Standard is Pine wood, optional Douglas Fir. Species available are Mahogany, Vertical Grain Douglas Fir, Cherry and White Oak
- Exterior: Extruded aluminum, 1.3 mm thick
- Frame thickness: 27 mm
- Frame width: 116 mm
- Fiberglass reinforced pultruded sill with water shed and weep system. Polycarbonate roller track. Beige color, optional: bronze color. Thickness: 2.5 mm. White Oak [Mahogany] [Cherry] interior sill liner

Panel:

- Interior: Standard is Pine wood, optional Douglas Fir. Species available are Mahogany, Vertical Grain Douglas Fir, Cherry and White Oak
- Exterior: Extruded aluminum, 1.4 mm thick
- Panel thickness: 44 mm
- Top rail and stile width: 121 mm
- Bottom rail height: 206 mm
- Operating stiles contain laminated veneer lumber (LVL) core with clear pine veneers
- Removable interior vinyl glazing bead with wood glazing cap

Interior and Exterior Finish:

- Interior finish: Treated bare wood or white latex primed (Pine only)
- Exterior finish: Standard colors: Stone White, Pebble Gray, Bahama Brown, Bronze and Evergreen. Select Color: Sierra White, Coconut Cream, French Vanilla, Cashmere, Desert Beige, Cumulus Gray, Cadet Gray, Ebony, Arctic White, Cascade Blue, Cobalt Blue, Hampton Sage, Sherwood Green and Wineberry. Contact your Marvin representative for details on custom colors

Hardware:

- Optional handle set: Active and inactive: Powdercoat finishes: Satin Taupe, White, Metal finishes: Brass PVD, Antique Brass, Oil Rubbed Bronze, Oil Rubbed Bronze PVD, Satin Chrome, Satin Nickel PVD
- Locking system – active panel: Marvin exclusive two point lock with stainless steel mechanism and strikes activated from handle set, non-keyed. Optional: three point lock with stainless steel mechanism and strikes. Optional: both two and three point locks available keyed. Inactive panel: manual stainless steel head bolts
- Rollers: Two adjustable steel roller assemblies per operating panel with two ball bearing wheels per assembly. Maximum vertical adjustment: 8 mm Optional: stainless steel rollers

Weather Stripping:

- Weather Strip: Interlock weather strip at meeting stiles. Side jamb to have two sets of bulb weather strip maintaining contact with door panels. Continuous slip coat weather strip along sill, head jamb, and meeting stiles. Color beige, optional: black

Jamb Extensions:

- Jamb extensions factory applied up to 192 mm. Other sizes shipped loose

Insect Screens:

- Optional Aluminum Top Hung Sliding Screen with adjustable rollers and replaceable bottom guide. Frame colors: Standard Color: Stone White, Bahama Brown, Bronze, Pebble Gray, Evergreen. Select Color: Sierra White, Coconut Cream, French Vanilla, Cashmere, Desert Beige, Cumulus Gray, Cadet Gray, Ebony, Arctic White, Cascade Blue, Cobalt Blue, Hampton Sage, Sherwood Green and Wineberry. Contact your Marvin representative for details on custom colors. Standard mesh: 18 x 16 charcoal fiberglass, contact your Marvin representative for additional screen mesh options
- Optional Ultimate Aluminum Top Hung Sliding Screen with adjustable roller assembly and replaceable bottom guide.
  Standard Color: Stone White, Bahama Brown, Bronze, Pebble Gray, Evergreen. Select Color: Sierra White, Coconut Cream, French Vanilla, Cashmere, Desert Beige, Cumulus Gray, Cadet Gray, Ebony, Arctic White, Cascade Blue, Cobalt Blue, Hampton Sage, Sherwood Green and Wineberry. Contact your Marvin representative for details on custom colors. Standard mesh: 18 x 16 charcoal fiberglass, contact your Marvin representative for additional screen mesh options
- Screens adjustable to 6 mm
- Optional Charcoal High Transparency screen mesh (CH Hi-Tran) 20 x 20 fiberglass

Removable Interior Grilles:

- Bar: Pine 19 mm or 29 mm
- Pattern: Rectangular, custom lite layouts available. Contact your Marvin representative

Interior / Exterior Simulated Divided lites (SDL):

- Interior bar: 22 mm or 29 mm wide bars. Standard is Pine wood, optional Douglas Fir. Species available are Mahogany, Vertical Grain Douglas Fir, Cherry and White Oak
- Exterior bar: 22 mm or 29 mm wide. Extruded aluminum. Finish to match exterior panel surface
- Insulated glass units available with or without aluminum spacer in airspace
- Pattern: rectangular. Custom lite layouts available. Contact your Marvin representative

Grilles-Between-the-Glass (GBG):

- 17 mm white contoured aluminum bar. Optional flat aluminum bar. Rectangular lite layout

Glass and Glazing:

- Door Panels: Tempered insulated glass
- Transoms: In-sash and Direct Glaze: Annealed insulated glass
- Glazing seal: silicone bedding, exterior
- Clear tempered glass standard, optional silicone glazed glass types: sandblasted; Laminated: Clear, White, Bronze, Gray, Green; Optional coating types: Low E II, Low E 240, and Low E 366; air filled, optional argon fill
- Capillary tubes required for higher elevations. Argon gas not available with capillary tubes

Accessories:

- Installation brackets: 162 mm, 238 mm, 391 mm
- Masonry brackets: 152 mm, 254 mm
- Nailing fin: Head jamb fin/drip cap, side jamb and sill fin. (not designed to replace proper flashing)
- Aluminum extrusions: Brick Mould Casing, Flat Casing, various special casings, Mullion Covers, Frame Expanders, Mullion Expanders

NOTE: Thermal Transmittance is calculated on a mid-size product with dual glazed Low E II coating and Argon fill.

Wood Ultimate Sliding French Door OX 6068 – Performance Characteristics

Air Permiability - EN 12207	3
Watertightness - EN 12208	6A
Resistance to Wind Load - EN 12210	A4
Impact Resistance - EN13049	5
Thermal Transmittance - Low EII with Argon	1.6
Radiation Properties - Light Transmittance - Low EII with Argon	0.72
Radiation Properties - Solar Factor - Low EII with Argon	0.45

Wood Ultimate Sliding French Door OXXO 12080 – Performance Characteristics

Air Permiability - EN 12207	3
Watertightness - EN 12208	5A
Resistance to Wind Load - EN 12210	B2
Impact Resistance - EN13049	5
Thermal Transmittance - Low EII with Argon	1.6
Radiation Properties - Light Transmittance - Low EII with Argon	0.72
Radiation Properties - Solar Factor - Low EII with Argon	0.44

Wood Ultimate Sliding French Door Transom – Performance Characteristics

Air Permiability - EN 12207	3
Watertightness - EN 12208	3A
Resistance to Wind Load - EN 12210	A5
Thermal Transmittance - Low EII with Argon	1.7
Radiation Properties - Light Transmittance - Low EII with Argon	0.72
Radiation Properties - Solar Factor - Low EII with Argon	0.45

Wood Ultimate Sliding French Door Direct Glaze Transom Performance Characteristics

Air Permiability - EN 12207	4
Watertightness - EN 12208	E1200
Resistance to Wind Load - EN 12210	E2400C
Thermal Transmittance - Low EII with Argon	1.4
Radiation Properties - Light Transmittance - Low EII with Argon	0.72
Radiation Properties - Solar Factor - Low EII with Argon	0.44

Wood Ultimate Sliding French Door Direct Glaze Transom Performance Characteristics

Air Permiability - EN 12207	4
Watertightness - EN 12208	E1200
Resistance to Wind Load - EN 12210	E2400C
Thermal Transmittance - Low EII with Argon	1.4
Radiation Properties - Light Transmittance - Low EII with Argon	0.72
Radiation Properties - Solar Factor - Low EII with Argon	0.44

Unit Features – Wood Ultimate Sliding French Door

Frame:

- Interior: Pine interior and exterior standard. Optional: Mahogany, Vertical Grain Douglas Fir
- Frame thickness: 27 mm
- Frame width: 116 mm
- Fiberglass reinforced pultruded sill with water shed and weep system. Polycarbonate roller track. Beige color, optional: bronze color. Thickness: 2.5 mm. White Oak [Mahogany] [Cherry] interior sill liner

Panel:

- Interior: Pine interior and exterior standard. Optional: Mahogany, Vertical Grain Douglas Fir
- Exterior: Extruded aluminum, 1.4 mm thick
- Panel thickness: 44 mm
- Top rail and stile width: 121 mm
- Bottom rail height: 206 mm
- Operating stiles contain laminated veneer lumber (LVL) core with clear pine veneers
- Removable interior vinyl glazing bead with wood glazing cap

Interior and Exterior Finish:

- Standard: treated bare wood. Optional: white primed (pine only)

Hardware:

- Optional handle set: Active and inactive: Powdercoat finishes: Satin Taupe, White, Metal finishes: Brass PVD, Antique Brass, Oil Rubbed Bronze, Oil Rubbed Bronze PVD, Satin Chrome, Satin Nickel PVD
- Locking system – active panel: Marvin exclusive two point lock with stainless steel mechanism and strikes activated from handle set, non-keyed. Optional: three point lock with stainless steel mechanism and strikes. Wood Ultimate Sliding French Door OXXO has three point locking system. Optional: both two and three point locks available keyed. Inactive panel: manual stainless steel head bolts
- Rollers: Two adjustable steel roller assemblies per operating panel with two ball bearing wheels per assembly. Maximum vertical adjustment: 8 mm Optional: stainless steel rollers

Weather Strip:

- Weather strip: Interlock weather strip at meeting stiles. Side jamb to have two sets of bulb weather strip maintaining contact with door panels. Continuous slip coat weather strip along sill, head jamb, and meeting stiles. Color beige, optional: black

Jamb Extensions:

- Jamb extensions factory applied up to 192 mm. Other sizes shipped loose

Insect Screens:

- Optional Aluminum Top Hung Sliding Screen with adjustable rollers and replaceable bottom guide. Frame colors: Stone White, Bahama Brown, Bronze, Pebble Gray, or Evergreen. Standard mesh: 18 x 16 charcoal fiberglass, contact your Marvin representative for additional screen mesh options
- Optional Ultimate Aluminum Top Hung Sliding Screen with adjustable roller assembly and replaceable bottom guide. Full screen standard mesh: 18 x 16 charcoal fiberglass, contact your Marvin representative for additional screen mesh options
- Screens adjustable to 6 mm
- Optional Charcoal High Transparency screen mesh (CH Hi-Tran) 20 x 20 fiberglass

Removable Interior Grilles:

- Bar: Pine 19 mm or 29 mm
- Pattern: Rectangular, custom lite layouts available. Contact your Marvin representative

Interior / Exterior Simulated Divided lites (SDL):

- Interior and exterior bar: 22 mm or 29 mm wide. Pine standard. Optional: Mahogany, Vertical Grain Douglas Fir. Finish to match panel surface
- Insulated glass units available with or without aluminum spacer in airspace
- Pattern: rectangular. Custom lite layouts available. Contact your Marvin representative

Grilles-Between-the-Glass (GBG):

- 17 mm white contoured aluminum bar. Optional flat aluminum bar.
- Rectangular lite layout

Glass and Glazing:

- Door Panels: tempered insulated glass
- Transoms: In-Sash and Direct Glaze annealed insulated glass, Optional: tempered insulated glass.
- Glazing seal: silicone bedding, exterior
- Clear tempered glass standard, optional glass types: sandblasted; Laminated: Clear, White, Bronze, Gray, Green; Optional coating types: Low E II, Low E 240, and Low E 366; air filled, optional argon fill
- Capillary tubes required for higher elevations. Argon gas not available with capillary tubes

Accessories:

- Aluminum drip cap: Stone White, Bahama Brown, Bronze, Pebble Gray, Evergreen
- Installation brackets: 162 mm, 238 mm, 391 mm
- Masonry brackets: 152 mm, 254 mm

Exterior Mouldings:

- Flat casing, specify width, stucco brick mould casing, stucco flat casing, specify width. Custom wood casings available. Pine standard, optional; Mahogany, or Vertical Grain Douglas Fir

Unit Sizing / Measurements – Clad and Wood Ultimate Sliding French Door

Unit Sizing / Measurements			
Height			
Unit Type	**Call Number**	**Frame Size**	**Rough Opening**
All Configurations	6-6*	2019	2032
	6-8	2083	2096
	8-0	2426	2451
Width			
Unit Type	**Call Number**	**Frame Size**	**Rough Opening**
1 Panel	2666**	778	803
	3066**	960	956
	3066**	1235	1260
	2-6	799	824
	3-0	951	976
	4-0	1256	1281
2 Panel	5066**	1499	1524
	6066**	1803	1829
	8066**	2413	2438
	5-0	1540	1565
	6-0	1845	1870
	8-0	2454	2480
3 Panel	7-6	2354	2380
	9-0	2811	2837
	12-0	3726	3751
4 Panel	10-0	3023	3048
	12-0	3632	3658

NOTE: All measurements shown are in mm.
* Available in 2666, 3066, 4066, 5066, 6066, and 8066 widths only.
** Available in 6-6 height only.

Minimum / Maximum Measurements– Clad and Wood Ultimate Sliding French Door

Minimum and Maximum Measurements				
Glazing Type	**Minimum RO Width**	**Minimum RO Height**	**Maximum RO Width**	**Maximum RO Height**
Ultimate Sliding French Door				
1 - Panel Stationary	457 mm	1799 mm	1383 mm	2438 mm
2 - Panel Operator - 1 Panel Operator	1086 mm	1799 mm	2480 mm	2438 mm
3 - Panel Operator - 1 Panel Operator	1161 mm	1799 mm	3751 mm	2438 mm
4 - Panel Operator - 2 Panel Operator	2111 mm	1799 mm	3752 mm	2438 mm
Transom				
Direct Glaze Factory / Field Mulled Stand Alone	 368 mm 368 mm	 318 mm 318 mm	 2605 mm 2605 mm	 927 mm 2438 mm
1 Frame / 1 Sash Field Mulled Stand Alone	 637 mm 637 mm	 360 mm 360 mm	 2480 mm 2480 mm	 775 mm 775 mm
1 Frame / 1 Sash / 1 Center Stile Field Mulled Stand Alone	 1086 mm 1086 mm	 360 mm 360 mm	 2480 mm 2480mm	 775 mm 775 mm
1 Frame / 2 Sash / 1 Center Stile Field Mulled Stand Alone	 1661 mm 1661 mm	 360 mm 360 mm	 2837 mm 3751 mm	 775 mm 775 mm
1 Frame / 2 Sash / 2 Center Stiles Stand Alone	 2111 mm	 360 mm	 3752 mm	 775 mm
1 Frame / 3 Sash Stand Alone	 2111 mm	 360 mm	 3752 mm	 775 mm
NOTE: Factory mulled units largest finish assembly 2572 mm x 3664 mm or 3664 mm x 2572 mm. Stand alone indicates a transom in its own opening. In-Sash transoms factory mulled are only available with doors that have an operating panel.				

Measurement Conversions – Clad Ultimate Sliding French Door

Measurement Conversions – 1 Panel

Size Referenced	Dimension Given	Daylight Opening (DLO)		Glass Size (GS)		Frame Size		Rough Opening		Masonry Opening (Without Casing)		Masonry Opening (With Brick Mould Casing)		Masonry Opening (With Flat Casing)	
		Dimension Needed													
Daylight Opening (DLO)				Width	+ 33 mm	Width	+ 301 mm	Width	+ 326 mm	Width	+ 314 mm	Width	+ 380 mm	Width	+ 466 mm
				Height	+ 33 mm	Height	+ 403 mm	Height	+ 416 mm	Height	+ 410 mm	Height	+ 443 mm	Height	+ 486 mm
Glass Size (GS)		Width	- 33 mm			Width	+ 267 mm	Width	+ 293 mm	Width	+ 280 mm	Width	+ 347 mm	Width	+ 433 mm
		Height	- 33 mm			Height	+ 370 mm	Height	+ 383 mm	Height	+ 376 mm	Height	+ 410 mm	Height	+ 452 mm
Frame Size		Width	- 301 mm	Width	- 267 mm			Width	+ 25 mm	Width	+ 13 mm	Width	+ 79 mm	Width	+ 165 mm
		Height	- 403 mm	Height	- 370 mm			Height	+ 13 mm	Height	+ 6 mm	Height	+ 40 mm	Height	+ 83 mm
Rough Opening		Width	- 326 mm	Width	- 293 mm	Width	- 25 mm			Width	- 13 mm	Width	+ 54 mm	Width	+ 140 mm
		Height	- 416 mm	Height	- 383 mm	Height	- 13 mm			Height	- 6 mm	Height	+ 27 mm	Height	+ 70 mm
Masonry Opening (Without Casing)		Width	- 314 mm	Width	- 280 mm	Width	- 13 mm	Width	+ 13 mm			Width	+ 67 mm	Width	+ 152 mm
		Height	- 410 mm	Height	- 376 mm	Height	- 6 mm	Height	+ 6 mm			Height	+ 33 mm	Height	+ 76 mm
Masonry Opening (With Brick Mould Casing)		Width	- 380 mm	Width	- 347 mm	Width	- 79 mm	Width	- 54 mm	Width	- 67 mm			Width	+ 86 mm
		Height	- 443 mm	Height	- 410 mm	Height	- 56 mm	Height	- 27 mm	Height	- 33 mm			Height	+ 43 mm
Masonry Opening (With Flat Casing)		Width	- 466 mm	Width	- 433 mm	Width	- 165 mm	Width	- 140 mm	Width	- 152 mm	Width	- 86 mm		
		Height	- 486 mm	Height	- 452 mm	Height	- 83 mm	Height	- 70 mm	Height	- 76 mm	Height	- 43 mm		

Measurement Conversions – 2 Panel

Size Referenced	Dimension Given	Daylight Opening (DLO)		Glass Size (GS)		Frame Size		Rough Opening		Masonry Opening (Without Casing)		Masonry Opening (With Brick Mould Casing)		Masonry Opening (With Flat Casing)	
		Dimension Needed													
Daylight Opening (DLO)				Width	+ 33 mm	Width	DLO x 2 + 435 mm	Width	DLO x 2 + 460 mm	Width	DLO x 2 + 448 mm	Width	DLO x 2 + 514 mm	Width	DLO x 2 + 600 mm
				Height	+ 33 mm	Height	+ 403 mm	Height	+ 416 mm	Height	+ 410 mm	Height	+ 443 mm	Height	+ 486 mm
Glass Size (GS)		Width	- 33 mm			Width	GS x 2 + 368 mm	Width	GS x 2 + 394 mm	Width	GS x 2 + 381 mm	Width	GS x 2 + 448 mm	Width	GS x 2 + 533 mm
		Height	- 33 mm			Height	+ 370 mm	Height	+ 383 mm	Height	+ 376 mm	Height	+ 410 mm	Height	+ 452 mm
Frame Size		Width	- 435 mm ÷ 2	Width	- 368 mm ÷ 2			Width	+ 25 mm	Width	+ 13 mm	Width	+ 79 mm	Width	+ 165 mm
		Height	- 403 mm	Height	- 370 mm			Height	+ 13 mm	Height	+ 6 mm	Height	+ 40 mm	Height	+ 83 mm
Rough Opening		Width	- 460 mm ÷ 2	Width	- 394 mm ÷ 2	Width	- 25 mm			Width	- 13 mm	Width	+ 54 mm	Width	+ 140 mm
		Height	- 416 mm	Height	- 383 mm	Height	- 13 mm			Height	- 6 mm	Height	+ 27 mm	Height	+ 70 mm
Masonry Opening (Without Casing)		Width	- 448 mm ÷ 2	Width	- 381 mm ÷ 2	Width	- 13 mm	Width	+ 13 mm			Width	+ 67 mm	Width	+ 152 mm
		Height	- 410 mm	Height	- 376 mm	Height	- 6 mm	Height	+ 6 mm			Height	+ 33 mm	Height	+ 76 mm
Masonry Opening (With Brick Mould Casing)		Width	- 514 mm ÷ 2	Width	- 448 mm ÷ 2	Width	- 79 mm	Width	- 54 mm	Width	- 67 mm			Width	+ 86 mm
		Height	- 443 mm	Height	- 410 mm	Height	- 40 mm	Height	- 27 mm	Height	- 33 mm			Height	+ 43 mm
Masonry Opening (With Flat Casing)		Width	- 600 mm ÷ 2	Width	- 533 mm ÷ 2	Width	- 165 mm	Width	- 140 mm	Width	- 152 mm	Width	- 86 mm		
		Height	- 486 mm	Height	- 452 mm	Height	- 83 mm	Height	- 70 mm	Height	- 76 mm	Height	- 43 mm		

Measurement Conversions – Clad Ultimate Sliding French Door

Measurement Conversions – 3 Panel

Size Referenced	Dimension Given	Daylight Opening (DLO)		Glass Size (GS)		Frame Size		Rough Opening		Masonry Opening (Without Casing)		Masonry Opening (With Brick Mould Casing)		Masonry Opening (With Flat Casing)	
		Dimension Needed													
Daylight Opening (DLO)				Width	+ 33 mm	Width	DLO x 3 + 697 mm	Width	DLO x 3 + 722 mm	Width	DLO x 3 + 710 mm	Width	DLO x 3 + 776 mm	Width	DLO x 3 + 862 mm
				Height	+ 33 mm	Height	+ 403 mm	Height	+ 416 mm	Height	+ 410 mm	Height	+ 443 mm	Height	+ 486 mm
Glass Size (GS)		Width	- 33 mm			Width	GS x 3 + 597 mm	Width	GS x 3 + 622 mm	Width	GS x 3 + 610 mm	Width	GS x 3 + 676 mm	Width	GS x 3 + 762 mm
		Height	- 33 mm			Height	+ 370 mm	Height	+ 383mm	Height	+ 376 mm	Height	+ 410 mm	Height	+ 452 mm
Frame Size		Width	- 697 mm ÷ 3	Width	- 597 mm ÷ 3			Width	+ 25 mm	Width	+ 13 mm	Width	+ 79 mm	Width	+ 165 mm
		Height	- 403 mm	Height	- 370 mm			Height	+ 13 mm	Height	+ 6 mm	Height	+ 40 mm	Height	+ 83 mm
Rough Opening		Width	- 722 mm ÷ 3	Width	- 622 mm ÷ 3	Width	- 25 mm			Width	- 13 mm	Width	+ 54 mm	Width	+ 140 mm
		Height	- 416 mm	Height	- 383 mm	Height	- 13 mm			Height	- 6 mm	Height	+ 27 mm	Height	+ 70 mm
Masonry Opening (Without Casing)		Width	- 710 mm ÷ 3	Width	- 610 mm ÷ 3	Width	- 13 mm	Width	+ 13 mm			Width	+ 67 mm	Width	+ 152 mm
		Height	- 410 mm	Height	- 376 mm	Height	- 6 mm	Height	+ 6 mm			Height	+ 33 mm	Height	+ 76 mm
Masonry Opening (With Brick Mould Casing)		Width	- 776 mm ÷ 3	Width	- 676 mm ÷ 3	Width	- 79 mm	Width	- 54 mm	Width	- 67 mm			Width	+ 86 mm
		Height	- 443 mm	Height	- 410 mm	Height	- 40 mm	Height	- 27 mm	Height	- 33 mm			Height	+ 43 mm
Masonry Opening (With Flat Casing)		Width	- 862 mm ÷ 3	Width	- 762 mm ÷ 3	Width	- 165 mm	Width	- 140 mm	Width	- 152 mm	Width	- 86 mm		
		Height	- 486 mm	Height	- 452 mm	Height	- 83 mm	Height	- 70 mm	Height	- 76 mm	Height	- 43 mm		

Measurement Conversions – 4 Panel

Size Referenced	Dimension Given	Daylight Opening (DLO)		Glass Size (GS)		Frame Size		Rough Opening		Masonry Opening (Without Casing)		Masonry Opening (With Brick Mould Casing)		Masonry Opening (With Flat Casing)	
		Dimension Needed													
Daylight Opening (DLO)				Width	+ 33 mm	Width	DLO x 4 + 813 mm	Width	DLO x 4 + 838 mm	Width	DLO x 4 + 826 mm	Width	DLO x 4 + 892 mm	Width	DLO x 4 + 978 mm
				Height	+ 33 mm	Height	+ 403 mm	Height	+ 416 mm	Height	+ 410 mm	Height	+ 443 mm	Height	+ 486 mm
Glass Size (GS)		Width	- 33 mm			Width	GS x 4 + 679 mm	Width	GS x 4 + 705 mm	Width	GS x 4 + 692 mm	Width	GS x 4 + 759 mm	Width	GS x 4 + 845 mm
		Height	- 33 mm			Height	+ 370 mm	Height	+ 383mm	Height	+ 376 mm	Height	+ 410 mm	Height	+ 452 mm
Frame Size		Width	- 813 mm ÷ 4	Width	- 679 mm ÷ 4			Width	+ 25 mm	Width	+ 13 mm	Width	+ 79 mm	Width	+ 165 mm
		Height	- 403 mm	Height	- 370 mm			Height	+ 13 mm	Height	+ 6 mm	Height	+ 40 mm	Height	+ 83 mm
Rough Opening		Width	- 838 mm ÷ 4	Width	- 705 mm ÷ 4	Width	- 25 mm			Width	- 13 mm	Width	+ 54 mm	Width	+ 140 mm
		Height	- 416 mm	Height	- 383 mm	Height	- 13 mm			Height	- 6 mm	Height	+ 27 mm	Height	+ 70 mm
Masonry Opening (Without Casing)		Width	- 826 mm ÷ 4	Width	- 692 mm ÷ 4	Width	- 13 mm	Width	+ 13 mm			Width	+ 67 mm	Width	+ 152 mm
		Height	- 410 mm	Height	- 376 mm	Height	- 6 mm	Height	+ 6 mm			Height	+ 33 mm	Height	+ 76 mm
Masonry Opening (With Brick Mould Casing)		Width	- 892 mm ÷ 4	Width	- 759 mm ÷ 4	Width	- 79 mm	Width	- 54 mm	Width	- 67 mm			Width	+ 86 mm
		Height	- 443 mm	Height	- 410 mm	Height	- 40 mm	Height	- 27 mm	Height	- 33 mm			Height	+ 43 mm
Masonry Opening (With Flat Casing)		Width	- 978 mm ÷ 4	Width	- 845 mm ÷ 4	Width	- 165 mm	Width	- 140 mm	Width	- 152 mm	Width	- 86 mm		
		Height	- 486 mm	Height	- 452 mm	Height	- 83 mm	Height	- 70 mm	Height	- 76 mm	Height	- 43 mm		

Measurement Conversions – Clad Ultimate Sliding French Door

Measurement Conversions – 1 Frame 1 Sash

Size Referenced		Daylight Opening (DLO)		Glass Size (GS)		Frame Size		Rough Opening		Masonry Opening (Without Casing)		Masonry Opening (With Brick Mould Casing)		Masonry Opening (With Flat Casing)	
		Dimension Needed													
Daylight Opening (DLO)				Width	+ 33 mm	Width	+ 301 mm	Width	+ 326 mm	Width	+ 314 mm	Width	+ 380 mm	Width	+ 466 mm
				Height	+ 33 mm	Height	+ 403 mm	Height	+ 416 mm	Height	+ 410 mm	Height	+ 443 mm	Height	+ 486 mm
Glass Size (GS)	Dimension Given	Width	- 33 mm			Width	+ 267 mm	Width	+ 293 mm	Width	+ 280 mm	Width	+ 347 mm	Width	+ 433 mm
		Height	- 33 mm			Height	+ 370 mm	Height	+ 383 mm	Height	+ 376 mm	Height	+ 410 mm	Height	+ 452 mm
Frame Size		Width	- 301 mm	Width	- 267 mm			Width	+ 25 mm	Width	+ 13 mm	Width	+ 79 mm	Width	+ 165 mm
		Height	- 403 mm	Height	- 370 mm			Height	+ 13 mm	Height	+ 6 mm	Height	+ 40 mm	Height	+ 83 mm
Rough Opening		Width	- 326 mm	Width	- 293 mm	Width	- 25 mm			Width	- 13 mm	Width	+ 54 mm	Width	+ 140 mm
		Height	- 416 mm	Height	- 383 mm	Height	- 13 mm			Height	- 6 mm	Height	+ 27 mm	Height	+ 70 mm
Masonry Opening (Without Casing)		Width	- 314 mm	Width	- 280 mm	Width	- 13 mm	Width	+ 13 mm			Width	+ 67 mm	Width	+ 152 mm
		Height	- 410 mm	Height	- 376 mm	Height	- 6 mm	Height	+ 6 mm			Height	+ 33 mm	Height	+ 76 mm
Masonry Opening (With Brick Mould Casing)		Width	- 380 mm	Width	- 347 mm	Width	- 79 mm	Width	- 54 mm	Width	- 67 mm			Width	+ 86 mm
		Height	- 443 mm	Height	- 410 mm	Height	- 56 mm	Height	- 27 mm	Height	- 33 mm			Height	+ 43 mm
Masonry Opening (With Flat Casing)		Width	- 466 mm	Width	- 433 mm	Width	- 165 mm	Width	- 140 mm	Width	- 152 mm	Width	- 86 mm		
		Height	- 486 mm	Height	- 452 mm	Height	- 83 mm	Height	- 70 mm	Height	- 76 mm	Height	- 43 mm		

Measurement Conversions – 1 Frame 1 Sash with Center Stile

Size Referenced		Daylight Opening (DLO)		Glass Size (GS)		Frame Size		Rough Opening		Masonry Opening (Without Casing)		Masonry Opening (With Brick Mould Casing)		Masonry Opening (With Flat Casing)	
		Dimension Needed													
Daylight Opening (DLO)				Width	+ 33 mm	Width	DLO x 2 + 435 mm	Width	DLO x 2 + 460 mm	Width	DLO x 2 + 448 mm	Width	DLO x 2 + 514 mm	Width	DLO x 2 + 600 mm
				Height	+ 33 mm	Height	+ 221 mm	Height	+ 233 mm	Height	+ 227 mm	Height	+ 276 mm	Height	+ 319 mm
Glass Size (GS)	Dimension Given	Width	- 33 mm			Width	GS x 2 + 368 mm	Width	GS x 2 + 394 mm	Width	GS x 2 + 381 mm	Width	GS x 2 + 448 mm	Width	GS x 2 + 533 mm
		Height	- 33 mm			Height	+ 187 mm	Height	+ 200 mm	Height	+ 194 mm	Height	+ 243 mm	Height	+ 286 mm
Frame Size		Width	- 435 mm ÷ 2	Width	- 368 mm ÷ 2			Width	+ 25 mm	Width	+ 13 mm	Width	+ 79 mm	Width	+ 165 mm
		Height	- 221 mm	Height	- 187 mm			Height	+ 13 mm	Height	+ 6 mm	Height	+ 56 mm	Height	+ 98 mm
Rough Opening		Width	- 460 mm ÷ 2	Width	- 394 mm ÷ 2	Width	- 25 mm			Width	- 13 mm	Width	+ 54 mm	Width	+ 140 mm
		Height	- 233 mm	Height	- 200 mm	Height	- 13 mm			Height	- 6 mm	Height	+ 43 mm	Height	+ 86 mm
Masonry Opening (Without Casing)		Width	- 448 mm ÷ 2	Width	- 381 mm ÷ 2	Width	- 13 mm	Width	+ 13 mm			Width	+ 67 mm	Width	+ 152 mm
		Height	- 227 mm	Height	- 194 mm	Height	- 6 mm	Height	+ 6 mm			Height	+ 49 mm	Height	+ 92 mm
Masonry Opening (With Brick Mould Casing)		Width	- 514 mm ÷ 2	Width	- 448 mm ÷ 2	Width	- 79 mm	Width	- 54 mm	Width	- 67 mm			Width	+ 86 mm
		Height	- 276 mm	Height	- 243 mm	Height	- 56 mm	Height	- 43 mm	Height	- 33 mm			Height	+ 43 mm
Masonry Opening (With Flat Casing)		Width	- 600 mm ÷ 2	Width	- 533 mm ÷ 2	Width	- 165 mm	Width	- 140 mm	Width	- 152 mm	Width	- 86 mm		
		Height	- 319 mm	Height	- 286 mm	Height	- 98 mm	Height	- 86 mm	Height	- 92 mm	Height	- 43 mm		

Measurement Conversions – Clad Ultimate Sliding French Door

Measurement Conversions – 1 Frame 2 Sash with 1 Center Transom Stand Alone

Size Referenced		Daylight Opening (DLO)		Glass Size (GS)		Frame Size		Rough Opening		Masonry Opening (Without Casing)		Masonry Opening (With Brick Mould Casing)		Masonry Opening (With Flat Casing)	
		Dimension Needed													
Daylight Opening (DLO)				Width	+ 33 mm	Width	DLO x 3 + 698 mm	Width	DLO x 3 + 723 mm	Width	DLO x 3 + 710 mm	Width	DLO x 3 + 777 mm	Width	DLO x 3 + 863 mm
				Height	+ 33 mm	Height	+ 221 mm	Height	+ 233 mm	Height	+ 227 mm	Height	+ 276 mm	Height	+ 319 mm
Glass Size (GS)	Dimension Given	Width	- 33 mm			Width	GS x 3 + 598 mm	Width	GS x 3 + 623 mm	Width	GS x 3 + 610 mm	Width	GS x 3 + 677 mm	Width	GS x 3 + 763 mm
		Height	- 33 mm			Height	+ 187 mm	Height	+ 200 mm	Height	+ 194 mm	Height	+ 243 mm	Height	+ 286 mm
Frame Size		Width	- 698 mm ÷ 3	Width	- 598 mm ÷ 3			Width	+ 25 mm	Width	+ 13 mm	Width	+ 79 mm	Width	+ 165 mm
		Height	- 221 mm	Height	- 187 mm			Height	+ 13 mm	Height	+ 6 mm	Height	+ 56 mm	Height	+ 98 mm
Rough Opening		Width	- 723 mm ÷ 3	Width	- 623 mm ÷ 3	Width	- 25 mm			Width	- 13 mm	Width	+ 54 mm	Width	+ 140 mm
		Height	- 233 mm	Height	- 200 mm	Height	- 13 mm			Height	- 6 mm	Height	+ 43 mm	Height	+ 86 mm
Masonry Opening (Without Casing)		Width	- 710 mm ÷ 3	Width	- 610 mm ÷ 3	Width	- 13 mm	Width	+ 13 mm			Width	+ 67 mm	Width	+ 152 mm
		Height	- 227 mm	Height	- 194 mm	Height	- 6 mm	Height	+ 6 mm			Height	+ 49 mm	Height	+ 92 mm
Masonry Opening (With Brick Mould Casing)		Width	- 777 mm ÷ 3	Width	- 677 mm ÷ 3	Width	- 79 mm	Width	- 54 mm	Width	- 67 mm			Width	+ 86 mm
		Height	- 276 mm	Height	- 243 mm	Height	- 56 mm	Height	- 43 mm	Height	- 33 mm			Height	+ 43 mm
Masonry Opening (With Flat Casing)		Width	- 863 mm ÷ 3	Width	- 763 mm ÷ 3	Width	- 165 mm	Width	- 140 mm	Width	- 152 mm	Width	- 86 mm		
		Height	- 319 mm	Height	- 286 mm	Height	- 98 mm	Height	- 86 mm	Height	- 92 mm	Height	- 43 mm		

Measurement Conversions – 1 Frame 2 Sash with 2 Center Stiles Transom Stand Alone

Size Referenced		Daylight Opening (DLO)		Glass Size (GS)		Frame Size		Rough Opening		Masonry Opening (Without Casing)		Masonry Opening (With Brick Mould Casing)		Masonry Opening (With Flat Casing)	
		Dimension Needed													
Daylight Opening (DLO)				Width	+ 33 mm	Width	DLO x 4 + 813 mm	Width	DLO x 4 + 838 mm	Width	DLO x 4 + 826 mm	Width	DLO x 4 + 892 mm	Width	DLO x 4 + 978 mm
				Height	+ 33 mm	Height	+ 221 mm	Height	+ 233 mm	Height	+ 227 mm	Height	+ 276 mm	Height	+ 319 mm
Glass Size (GS)	Dimension Given	Width	- 33 mm			Width	GS x 4 + 679 mm	Width	GS x 4 + 705 mm	Width	GS x 4 + 692 mm	Width	GS x 2 + 759 mm	Width	GS x 4 + 845 mm
		Height	- 33 mm			Height	+ 187 mm	Height	+ 200 mm	Height	+ 194 mm	Height	+ 243 mm	Height	+ 286 mm
Frame Size		Width	- 813 mm ÷ 4	Width	- 679 mm ÷ 4			Width	+ 25 mm	Width	+ 13 mm	Width	+ 79 mm	Width	+ 165 mm
		Height	- 221 mm	Height	- 187 mm			Height	+ 13 mm	Height	+ 6 mm	Height	+ 56 mm	Height	+ 98 mm
Rough Opening		Width	- 838 mm ÷ 4	Width	- 705 mm ÷ 4	Width	- 25 mm			Width	- 13 mm	Width	+ 54 mm	Width	+ 140 mm
		Height	- 233 mm	Height	- 200 mm	Height	- 13 mm			Height	- 6 mm	Height	+ 43 mm	Height	+ 86 mm
Masonry Opening (Without Casing)		Width	- 826 mm ÷ 4	Width	- 692 mm ÷ 4	Width	- 13 mm	Width	+ 13 mm			Width	+ 67 mm	Width	+ 152 mm
		Height	- 227 mm	Height	- 194 mm	Height	- 6 mm	Height	+ 6 mm			Height	+ 49 mm	Height	+ 92 mm
Masonry Opening (With Brick Mould Casing)		Width	- 892 mm ÷ 4	Width	- 759 mm ÷ 4	Width	- 79 mm	Width	- 54 mm	Width	- 67 mm			Width	+ 86 mm
		Height	- 276 mm	Height	- 243 mm	Height	- 56 mm	Height	- 43 mm	Height	- 33 mm			Height	+ 43 mm
Masonry Opening (With Flat Casing)		Width	- 978 mm ÷ 4	Width	- 845 mm ÷ 4	Width	- 165 mm	Width	- 140 mm	Width	- 152 mm	Width	- 86 mm		
		Height	- 319 mm	Height	- 286 mm	Height	- 98 mm	Height	- 86 mm	Height	- 92 mm	Height	- 43 mm		

Measurement Conversions – Clad Ultimate Sliding French Door

Measurement Conversions - Transom - Direct Glaze Stand Alone															
Size Referenced		**Daylight Opening** (DLO)		**Glass Size** (GS)		**Frame Size**		**Rough Opening**		**Masonry Opening** (Without Casing)		**Masonry Opening** (With Brick Mould Casing)		**Masonry Opening** (With Flat Casing)	
		Dimension Needed													
Daylight Opening (DLO)				Width	+ 40 mm	Width	+ 79 mm	Width	+ 105 mm	Width	+ 92 mm	Width	+ 159 mm	Width	+ 244 mm
				Height	+ 40 mm	Height	+ 79 mm	Height	+ 92 mm	Height	+ 86 mm	Height	+ 133 mm	Height	+ 176 mm
Glass Size (GS)		Width	- 40 mm			Width	+ 40 mm	Width	+ 65 mm	Width	+ 52 mm	Width	+ 119 mm	Width	+ 205 mm
		Height	- 40 mm			Height	+ 40 mm	Height	+ 52 mm	Height	+ 46 mm	Height	+ 94 mm	Height	+ 137 mm
Frame Size		Width	- 79 mm	Width	- 40 mm			Width	+ 25 mm	Width	+ 13 mm	Width	+ 79 mm	Width	+ 165 mm
		Height	- 79 mm	Height	- 40 mm			Height	+ 13 mm	Height	+ 6 mm	Height	+ 54 mm	Height	+ 97 mm
Rough Opening		Width	- 105 mm	Width	- 65 mm	Width	- 25 mm			Width	- 13 mm	Width	+ 54 mm	Width	+ 140 mm
		Height	- 92 mm	Height	- 52 mm	Height	- 13 mm			Height	- 6 mm	Height	+ 41 mm	Height	+ 84 mm
Masonry Opening (Without Casing)		Width	- 92 mm	Width	- 52 mm	Width	- 13 mm	Width	+ 13 mm			Width	+ 67 mm	Width	+ 152 mm
		Height	- 86 mm	Height	- 46 mm	Height	- 6 mm	Height	+ 6 mm			Height	+ 48 mm	Height	+ 90 mm
Masonry Opening (With Brick Mould Casing)		Width	- 159 mm	Width	- 119 mm	Width	- 79 mm	Width	- 54 mm	Width	- 67 mm			Width	+ 86 mm
		Height	- 133 mm	Height	- 94 mm	Height	- 54 mm	Height	- 41 mm	Height	- 48 mm			Height	+ 40 mm
Masonry Opening (With Flat Casing)		Width	- 244 mm	Width	- 205 mm	Width	- 165 mm	Width	- 140 mm	Width	- 152 mm	Width	- 86 mm		
		Height	- 176 mm	Height	- 137 mm	Height	- 97 mm	Height	- 84 mm	Height	- 90 mm	Height	- 40 mm		

Dimension Given

Measurement Conversions – Wood Ultimate Sliding French Door

Measurement Conversions – 1 Panel										
Size Referenced		**Daylight Opening** (DLO)		**Glass Size** (GS)		**Frame Size**		**Rough Opening**		**Masonry Opening** (With Brick Mould Casing)	
		Dimension Needed									
Daylight Opening (DLO)				Width	+ 33 mm	Width	+ 301 mm	Width	+ 326 mm	Width	+ 380 mm
				Height	+ 33 mm	Height	+ 403 mm	Height	+ 416 mm	Height	+ 443 mm
Glass Size (GS)		Width	- 33 mm			Width	+ 267 mm	Width	+ 293 mm	Width	+ 347 mm
		Height	- 33 mm			Height	+ 370 mm	Height	+ 383 mm	Height	+ 410 mm
Frame Size		Width	- 301 mm	Width	- 267 mm			Width	+ 25 mm	Width	+ 79 mm
		Height	- 403 mm	Height	- 370 mm			Height	+ 13 mm	Height	+ 40 mm
Rough Opening		Width	- 326 mm	Width	- 293 mm	Width	- 25 mm			Width	+ 54 mm
		Height	- 416 mm	Height	- 383 mm	Height	- 13 mm			Height	+ 27 mm
Masonry Opening (With Brick Mould Casing)		Width	- 380 mm	Width	- 347 mm	Width	- 79 mm	Width	- 54 mm		
		Height	- 443 mm	Height	- 410 mm	Height	- 56 mm	Height	- 27 mm		

Dimension Given

Measurement Conversions – 2 Panel										
Size Referenced		**Daylight Opening** (DLO)		**Glass Size** (GS)		**Frame Size**		**Rough Opening**		**Masonry Opening** (With Brick Mould Casing)	
		Dimension Needed									
Daylight Opening (DLO)				Width	+ 33 mm	Width	DLO x 2 + 435 mm	Width	DLO x 2 + 460 mm	Width	DLO x 2 + 514 mm
				Height	+ 33 mm	Height	+ 403 mm	Height	+ 416 mm	Height	+ 443 mm
Glass Size (GS)		Width	- 33 mm			Width	GS x 2 + 368 mm	Width	GS x 2 + 394 mm	Width	GS x 2 + 448 mm
		Height	- 33 mm			Height	+ 370 mm	Height	+ 383mm	Height	+ 410 mm
Frame Size		Width	- 435 mm ÷ 2	Width	- 368 mm ÷ 2			Width	+ 25 mm	Width	+ 79 mm
		Height	- 403 mm	Height	- 370 mm			Height	+ 13 mm	Height	+ 40 mm
Rough Opening		Width	- 460 mm ÷ 2	Width	- 394 mm ÷ 2	Width	- 25 mm			Width	+ 54 mm
		Height	- 416 mm	Height	- 383 mm	Height	- 13 mm			Height	+ 27 mm
Masonry Opening (With Brick Mould Casing)		Width	- 514 mm ÷ 2	Width	- 448 mm ÷ 2	Width	- 79 mm	Width	- 54 mm		
		Height	- 443 mm	Height	- 410 mm	Height	- 40 mm	Height	- 27 mm		

Dimension Given

Measurement Conversions – Wood Ultimate Sliding French Door

Measurement Conversions – 3 Panel											
Size Referenced		**Daylight Opening** (DLO)		**Glass Size** (GS)		**Frame Size**		**Rough Opening**		**Masonry Opening** (With Brick Mould Casing)	
	Dimension Given	**Dimension Needed**									
Daylight Opening (DLO)				Width	+ 33 mm	Width	DLO x 3 + 697 mm	Width	DLO x 3 + 722 mm	Width	DLO x 3 + 776 mm
				Height	+ 33 mm	Height	+ 403 mm	Height	+ 416 mm	Height	+ 443 mm
Glass Size (GS)		Width	- 33 mm			Width	GS x 3 + 597 mm	Width	GS x 3 + 622 mm	Width	GS x 3 + 676 mm
		Height	- 33 mm			Height	+ 370 mm	Height	+ 383mm	Height	+ 410 mm
Frame Size		Width	- 697 mm ÷ 3	Width	- 597 mm ÷ 3			Width	+ 25 mm	Width	+ 79 mm
		Height	- 403 mm	Height	- 370 mm			Height	+ 13 mm	Height	+ 40 mm
Rough Opening		Width	- 722 mm ÷ 3	Width	- 622 mm ÷ 3	Width	- 25 mm			Width	+ 54 mm
		Height	- 416 mm	Height	- 383 mm	Height	- 13 mm			Height	+ 27 mm
Masonry Opening (With Brick Mould Casing)		Width	- 776 mm ÷ 3	Width	- 676 mm ÷ 3	Width	- 79 mm	Width	- 54 mm		
		Height	- 443 mm	Height	- 410 mm	Height	- 40 mm	Height	- 27 mm		

Measurement Conversions – 4 Panel											
Size Referenced		**Daylight Opening** (DLO)		**Glass Size** (GS)		**Frame Size**		**Rough Opening**		**Masonry Opening** (With Brick Mould Casing)	
	Dimension Given	**Dimension Needed**									
Daylight Opening (DLO)				Width	+ 33 mm	Width	DLO x 4 + 813 mm	Width	DLO x 4 + 838 mm	Width	DLO x 4 + 892 mm
				Height	+ 33 mm	Height	+ 403 mm	Height	+ 416 mm	Height	+ 443 mm
Glass Size (GS)		Width	- 33 mm			Width	GS x 4 + 679 mm	Width	GS x 4 + 705 mm	Width	GS x 4 + 759 mm
		Height	- 33 mm			Height	+ 370 mm	Height	+ 383mm	Height	+ 410 mm
Frame Size		Width	- 813 mm ÷ 4	Width	- 679 mm ÷ 4			Width	+ 25 mm	Width	+ 79 mm
		Height	- 403 mm	Height	- 370 mm			Height	+ 13 mm	Height	+ 40 mm
Rough Opening		Width	- 838 mm ÷ 4	Width	- 705 mm ÷ 4	Width	- 25 mm			Width	+ 54 mm
		Height	- 416 mm	Height	- 383 mm	Height	- 13 mm			Height	+ 27 mm
Masonry Opening (With Brick Mould Casing)		Width	- 892 mm ÷ 4	Width	- 759 mm ÷ 4	Width	- 79 mm	Width	- 54 mm		
		Height	- 443 mm	Height	- 410 mm	Height	- 40 mm	Height	- 27 mm		

Measurement Conversions – Wood Ultimate Sliding French Door

Measurement Conversions - 1 Frame 1 Sash Transom Stand Alone										
Size Referenced		Daylight Opening (DLO)		Glass Size (GS)		Frame Size		Rough Opening		Masonry Opening (With Brick Mould Casing)	
		Dimension Needed									
Daylight Opening (DLO)				Width	+ 33 mm	Width	+ 301 mm	Width	+ 326 mm	Width	+ 380 mm
				Height	+ 33 mm	Height	+ 403 mm	Height	+ 416 mm	Height	+ 443 mm
Glass Size (GS)	Dimension Given	Width	- 33 mm			Width	+ 267 mm	Width	+ 293 mm	Width	+ 347 mm
		Height	- 33 mm			Height	+ 370 mm	Height	+ 383 mm	Height	+ 410 mm
Frame Size		Width	- 301 mm	Width	- 267 mm			Width	+ 25 mm	Width	+ 79 mm
		Height	- 403 mm	Height	- 370 mm			Height	+ 13 mm	Height	+ 40 mm
Rough Opening		Width	- 326 mm	Width	- 293 mm	Width	- 25 mm			Width	+ 54 mm
		Height	- 416 mm	Height	- 383 mm	Height	- 13 mm			Height	+ 27 mm
Masonry Opening (With Brick Mould Casing)		Width	- 380 mm	Width	- 347 mm	Width	- 79 mm	Width	- 54 mm		
		Height	- 443 mm	Height	- 410 mm	Height	- 56 mm	Height	- 27 mm		

Measurement Conversions - 1 Frame 1 Sash with Center Stile Stand Alone										
Size Referenced		Daylight Opening (DLO)		Glass Size (GS)		Frame Size		Rough Opening		Masonry Opening (With Brick Mould Casing)	
		Dimension Needed									
Daylight Opening (DLO)				Width	+ 33 mm	Width	+ 435 mm	Width	+ 460 mm	Width	+ 514 mm
				Height	+ 33 mm	Height	+ 221 mm	Height	+ 233 mm	Height	+ 276 mm
Glass Size (GS)	Dimension Given	Width	- 33 mm			Width	+ 368 mm	Width	+ 394 mm	Width	+ 448 mm
		Height	- 33 mm			Height	+ 187 mm	Height	+ 200 mm	Height	+ 243 mm
Frame Size		Width	- 435 mm	Width	- 368 mm			Width	+ 25 mm	Width	+ 79 mm
		Height	- 221 mm	Height	- 187 mm			Height	+ 13 mm	Height	+ 56 mm
Rough Opening		Width	- 460 mm	Width	- 394 mm	Width	- 25 mm			Width	+ 54 mm
		Height	- 233 mm	Height	- 200 mm	Height	- 13 mm			Height	+ 43 mm
Masonry Opening (With Brick Mould Casing)		Width	- 514 mm	Width	- 448 mm	Width	- 79 mm	Width	- 54 mm		
		Height	- 276 mm	Height	- 243 mm	Height	- 56 mm	Height	- 43 mm		

Measurement Conversions – Wood Ultimate Sliding French Door

Measurement Conversions – Transom 1 Frame – 1 Sash Stand Alone										
Size Referenced		**Daylight Opening** (DLO)		**Glass Size** (GS)		**Frame Size**		**Rough Opening**		**Masonry Opening** (With Brick Mould Casing)	
		Dimension Needed									
Daylight Opening (DLO)				Width	+ 33 mm	Width	+ 301 mm	Width	+ 326 mm	Width	+ 380 mm
				Height	+ 33 mm	Height	+ 221 mm	Height	+ 233 mm	Height	+ 276 mm
Glass Size (GS)		Width	- 33 mm			Width	+ 267 mm	Width	+ 293 mm	Width	+ 347 mm
		Height	- 33 mm			Height	+ 187 mm	Height	+ 200 mm	Height	+ 243 mm
Frame Size		Width	- 301 mm	Width	- 267 mm			Width	+ 25 mm	Width	+ 79 mm
		Height	- 221 mm	Height	- 187 mm			Height	+ 13 mm	Height	+ 56 mm
Rough Opening		Width	- 326 mm	Width	- 293 mm	Width	- 25 mm			Width	+ 54 mm
		Height	- 233 mm	Height	- 200 mm	Height	- 13 mm			Height	+ 43 mm
Masonry Opening (With Brick Mould Casing)		Width	- 380 mm	Width	- 347 mm	Width	- 79 mm	Width	- 54 mm		
		Height	- 276 mm	Height	- 243 mm	Height	- 56 mm	Height	- 43 mm		

Dimension Given

Measurement Conversions – Transom 1 Frame – 2 Sash Stand Alone										
Size Referenced		**Daylight Opening** (DLO)		**Glass Size** (GS)		**Frame Size**		**Rough Opening**		**Masonry Opening** (With Brick Mould Casing)	
		Dimension Needed									
Daylight Opening (DLO)				Width	+ 33 mm	Width	DLO x 2 + 545 mm	Width	DLO x 2 + 570 mm	Width	DLO x 2 + 624 mm
				Height	+ 33 mm	Height	+ 221 mm	Height	+ 233 mm	Height	+ 276 mm
Glass Size (GS)		Width	- 33 mm			Width	GS x 2 + 478 mm	Width	GS x 2 + 503 mm	Width	GS x 2 + 557 mm
		Height	- 33 mm			Height	+ 187 mm	Height	+ 200 mm	Height	+ 243 mm
Frame Size		Width	- 545 mm ÷ 2	Width	- 478 mm ÷ 2			Width	+ 25 mm	Width	+ 79 mm
		Height	- 221 mm	Height	- 187 mm			Height	+ 13 mm	Height	+ 56 mm
Rough Opening		Width	- 570 mm ÷ 2	Width	- 503 mm ÷ 2	Width	- 25 mm			Width	+ 54 mm
		Height	- 233 mm	Height	- 200 mm	Height	- 13 mm			Height	+ 43 mm
Masonry Opening (With Brick Mould Casing)		Width	- 624 mm ÷ 2	Width	- 557 mm ÷ 2	Width	- 79 mm	Width	- 54 mm		
		Height	- 276 mm	Height	- 243 mm	Height	- 56 mm	Height	- 43 mm		

Dimension Given

Measurement Conversions – Wood Ultimate Sliding French Door

Measurement Conversions – 1 Frame 2 Sash with Center Stile Stand Alone											
Size Referenced		**Daylight Opening** (DLO)		**Glass Size** (GS)		**Frame Size**		**Rough Opening**		**Masonry Opening** (With Brick Mould Casing)	
		Dimension Needed									
Daylight Opening (DLO)				Width	+ 33 mm	Width	DLO x 3 + 698 mm	Width	DLO x 3 + 723 mm	Width	DLO x 3 + 777 mm
				Height	+ 33 mm	Height	+ 221 mm	Height	+ 233 mm	Height	+ 276 mm
Glass Size (GS)		Width	- 33 mm			Width	GS x 3 + 598 mm	Width	GS x 3 + 623 mm	Width	GS x 3 + 677 mm
		Height	- 33 mm			Height	+ 187 mm	Height	+ 200 mm	Height	+ 243 mm
Frame Size		Width	- 698 mm ÷ 3	Width	- 598 mm ÷ 3			Width	+ 25 mm	Width	+ 79 mm
		Height	- 221 mm	Height	- 187 mm			Height	+ 13 mm	Height	+ 56 mm
Rough Opening		Width	- 723 mm ÷ 3	Width	- 623 mm ÷ 3	Width	- 25 mm			Width	+ 54 mm
		Height	- 233 mm	Height	- 200 mm	Height	- 13 mm			Height	+ 43 mm
Masonry Opening (With Brick Mould Casing)		Width	- 777 mm ÷ 3	Width	- 677 mm ÷ 3	Width	- 79 mm	Width	- 54 mm		
		Height	- 276 mm	Height	- 243 mm	Height	- 56 mm	Height	- 43 mm		

Measurement Conversions – 1 Frame 2 Sash with 2 Center Stiles Stand Alone											
Size Referenced		**Daylight Opening** (DLO)		**Glass Size** (GS)		**Frame Size**		**Rough Opening**		**Masonry Opening** (With Brick Mould Casing)	
		Dimension Needed									
Daylight Opening (DLO)				Width	+ 33 mm	Width	DLO x 4 + 813 mm	Width	DLO x 4 + 838 mm	Width	DLO x 4 + 892 mm
				Height	+ 33 mm	Height	+ 221 mm	Height	+ 233 mm	Height	+ 278 mm
Glass Size (GS)		Width	- 33 mm			Width	GS x 4 + 679 mm	Width	GS x 4 + 705 mm	Width	GS x 4 + 759 mm
		Height	- 33 mm			Height	+ 187 mm	Height	+ 200 mm	Height	+ 244 mm
Frame Size		Width	- 813 mm ÷ 4	Width	- 679 mm ÷ 3			Width	+ 25 mm	Width	+ 79 mm
		Height	- 221 mm	Height	- 187 mm			Height	+ 13 mm	Height	+ 57 mm
Rough Opening		Width	- 838 mm ÷ 4	Width	- 705 mm ÷ 4	Width	- 25 mm			Width	+ 54 mm
		Height	- 233 mm	Height	- 200 mm	Height	- 13 mm			Height	+ 44 mm
Masonry Opening (With Brick Mould Casing)		Width	- 892 mm ÷ 4	Width	- 759 mm ÷ 4	Width	- 79 mm	Width	- 54 mm		
		Height	- 278 mm	Height	- 244 mm	Height	- 57 mm	Height	- 44 mm		

Measurement Conversions – Wood Ultimate Sliding French Door

Measurement Conversions – Direct Glaze Transom – Stand Alone										
Size Referenced		**Daylight Opening** (DLO)		**Glass Size** (GS)		**Frame Size**		**Rough Opening**		**Masonry Opening** (With Brick Mould Casing)	
		Dimension Needed									
Daylight Opening (DLO)				Width	+ 40 mm	Width	+ 79 mm	Width	+ 105 mm	Width	+ 159 mm
				Height	+ 40 mm	Height	+ 79 mm	Height	+ 92 mm	Height	+ 137 mm
Glass Size (GS)	**Dimension Given**	Width	- 40 mm			Width	+ 40 mm	Width	+ 65 mm	Width	+ 119 mm
		Height	- 40 mm			Height	+ 40 mm	Height	+ 52 mm	Height	+ 97 mm
Frame Size		Width	- 79 mm	Width	- 40 mm			Width	+ 25 mm	Width	+ 79 mm
		Height	- 79 mm	Height	- 40 mm			Height	+ 13 mm	Height	+ 57 mm
Rough Opening		Width	- 105 mm	Width	- 65 mm	Width	- 25 mm			Width	+ 54 mm
		Height	- 92 mm	Height	- 52 mm	Height	- 13 mm			Height	+ 44 mm
Masonry Opening (With Brick Mould Casing)		Width	- 159 mm	Width	- 119 mm	Width	- 79 mm	Width	- 54 mm		
		Height	- 137 mm	Height	- 97 mm	Height	- 57 mm	Height	- 44 mm		

Section Details – Clad Ultimate Sliding French Door – Operating

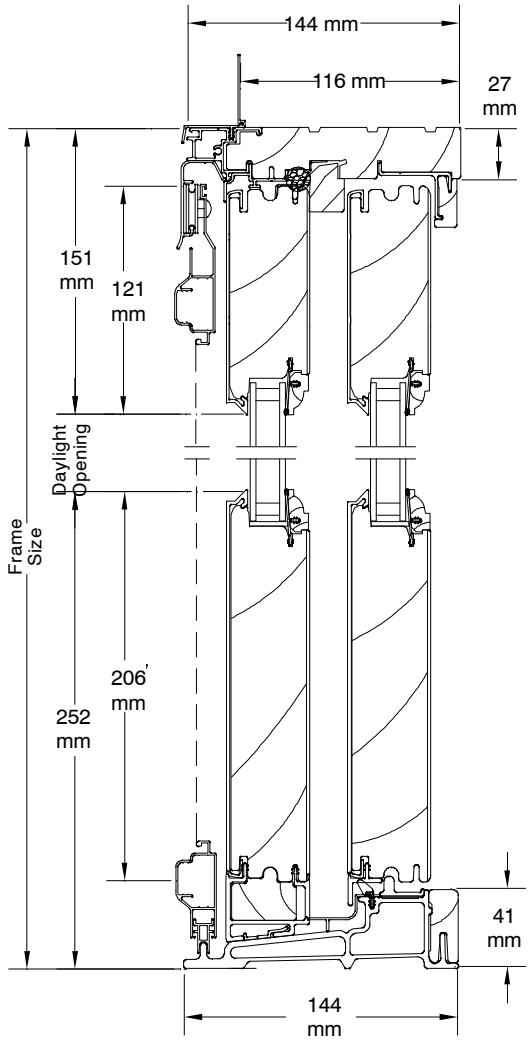

Head Jamb and Sill

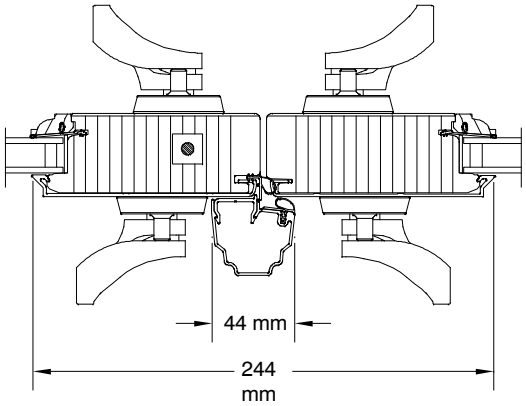

OXXO RH – Meeting Stiles

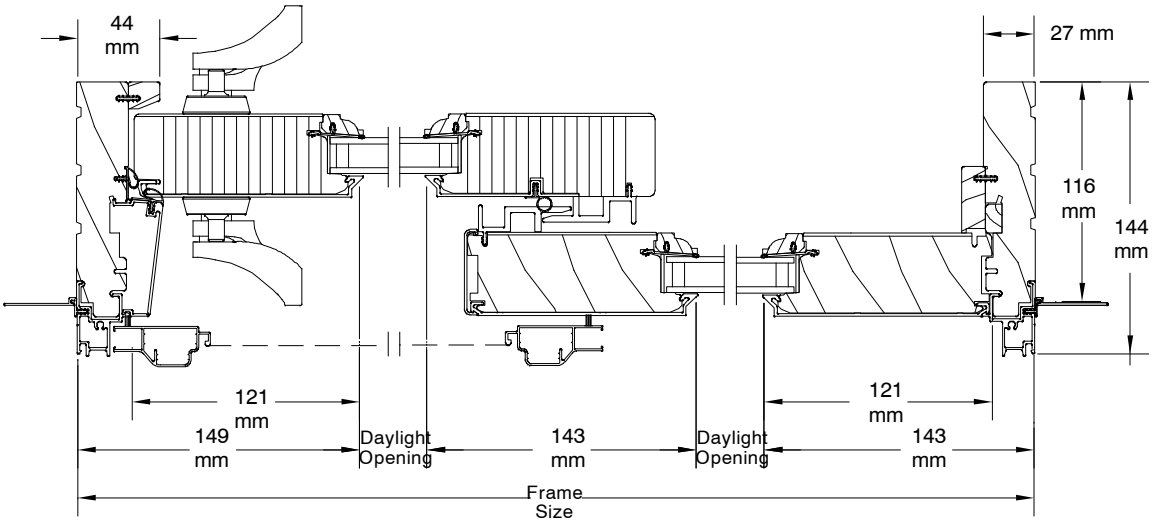

X O Jamb

Section Details – Clad Ultimate Sliding French Door – Stationary / Sidelite

Head Jamb and Sill

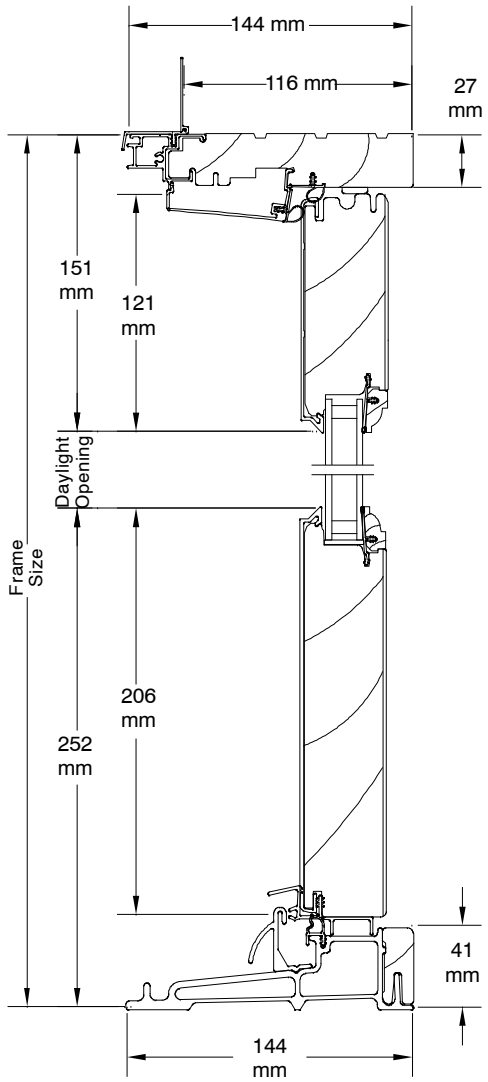

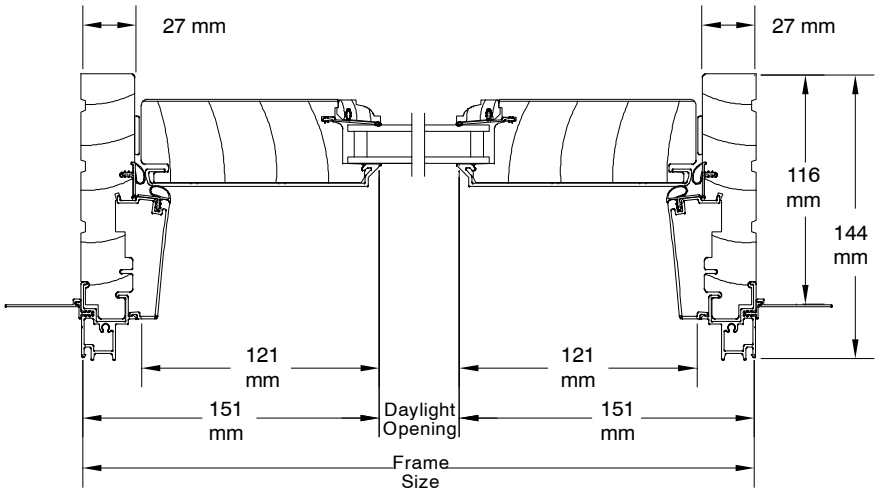

O Jamb

Section Details – Clad Ultimate Sliding French Door – In-Sash Transom

Head Jamb and Sill
In-Sash Transom

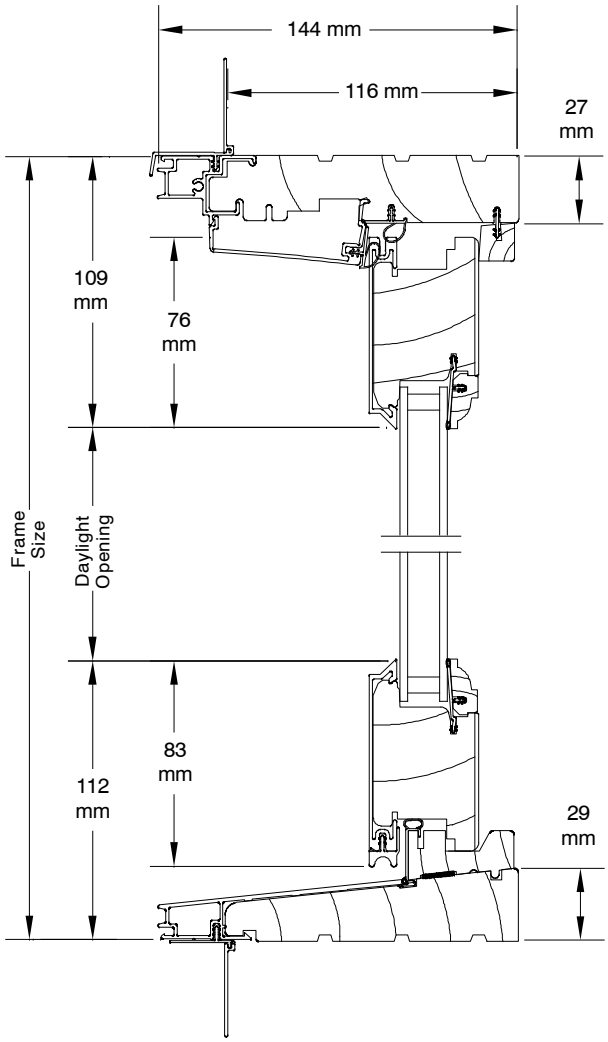

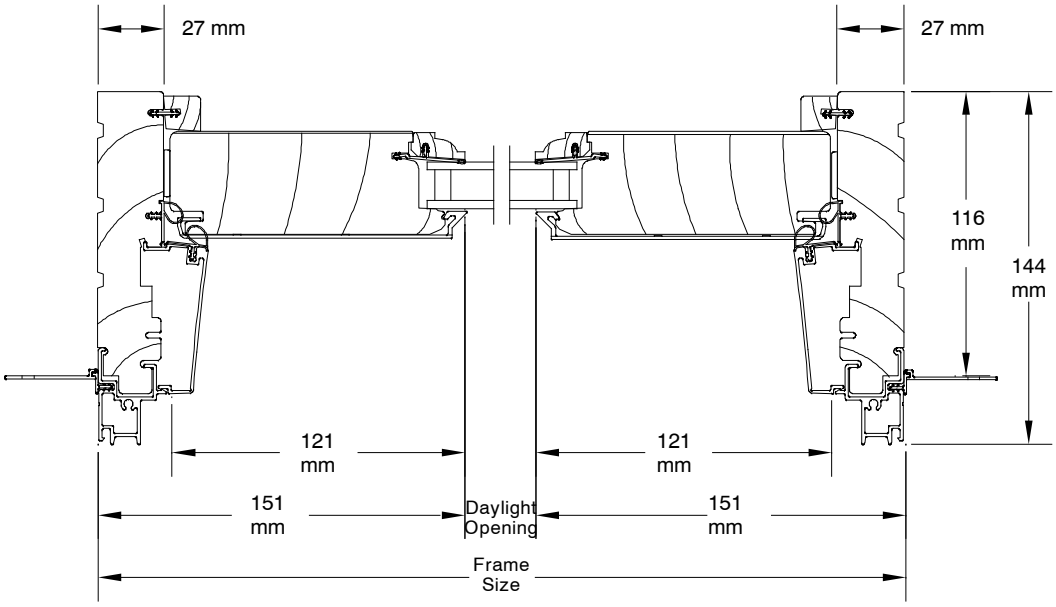

Jamb
In-Sash Transom

Section Details – Clad Ultimate Sliding French Door – Direct Glaze Transom

Head Jamb and Sill
Direct Glaze Transom

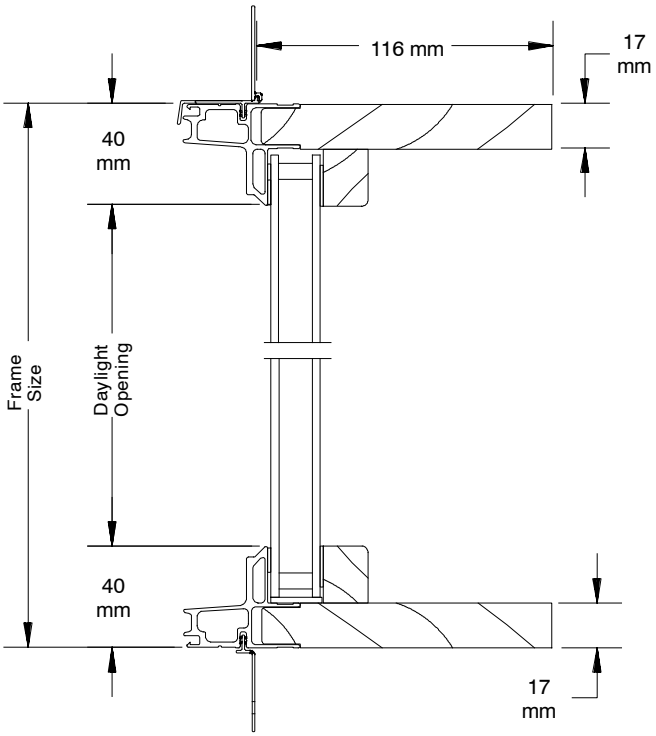

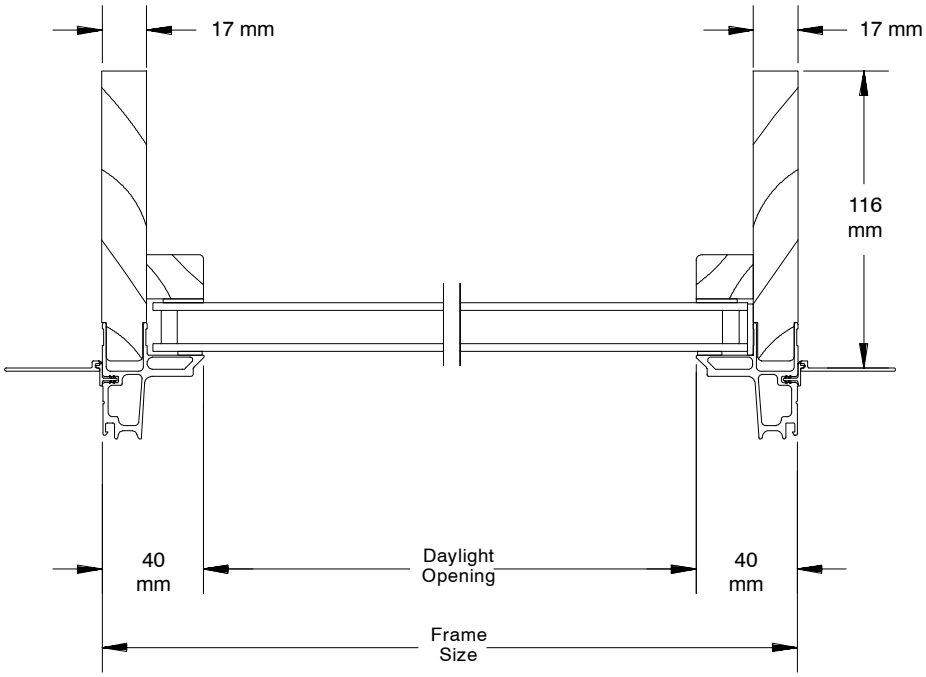

Jamb
Direct Glaze Transom

Section Details – Wood Ultimate Sliding French Door – Operating

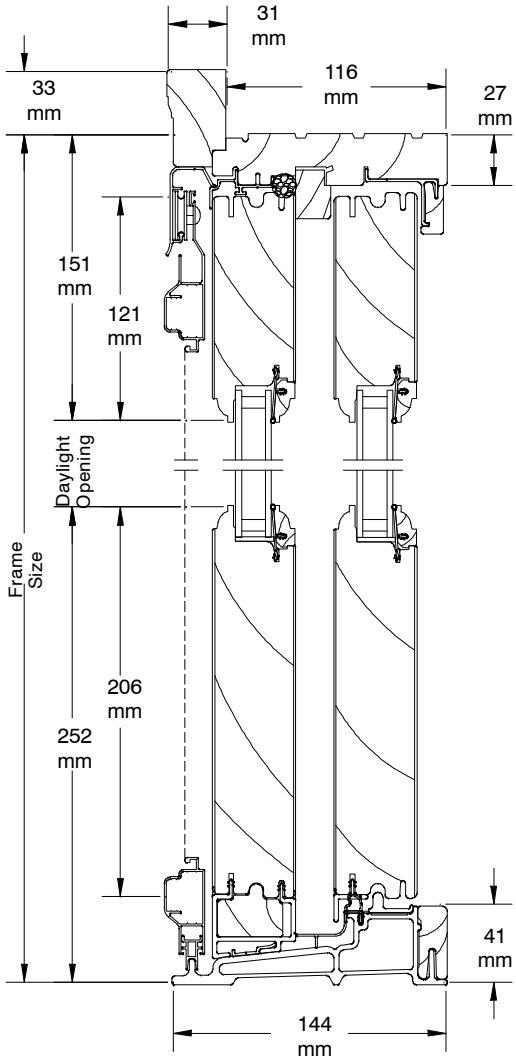

Head Jamb and Sill

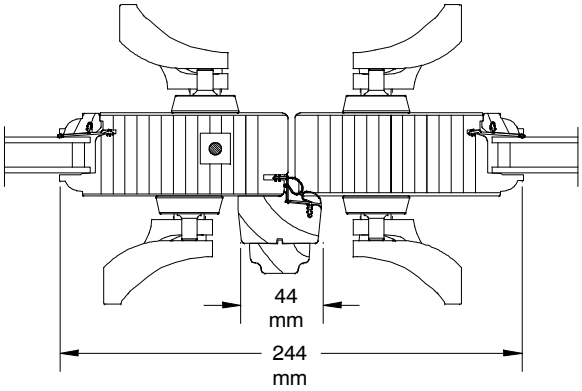

OXXO RH – Meeting Stiles

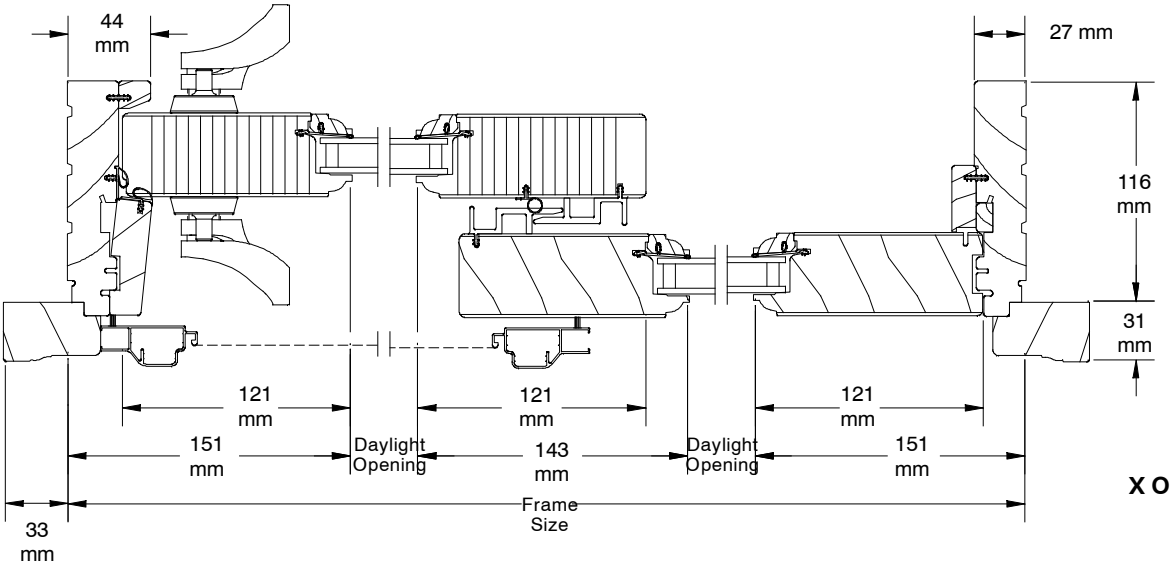

X O Jamb

Section Details – Wood Ultimate Sliding French Door – Stationary / Sidelite

Head Jamb and Sill

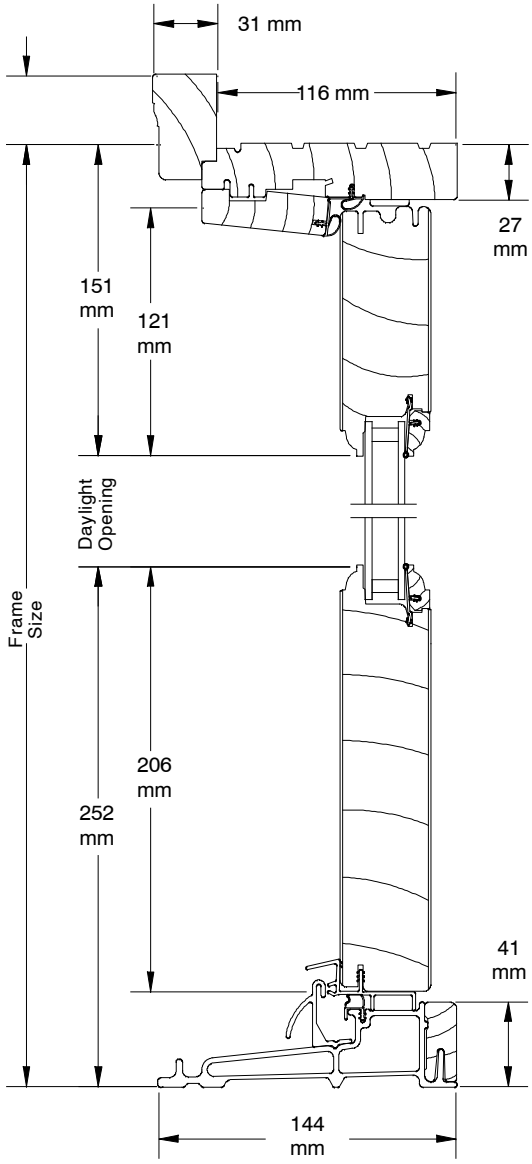

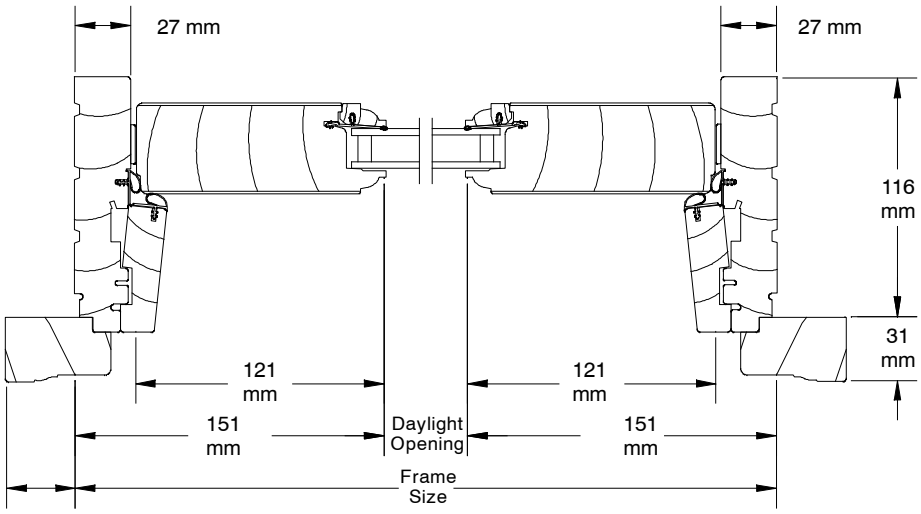

O Jamb

Section Details – Clad Ultimate Sliding French Door – In-Sash Transom and Mullion

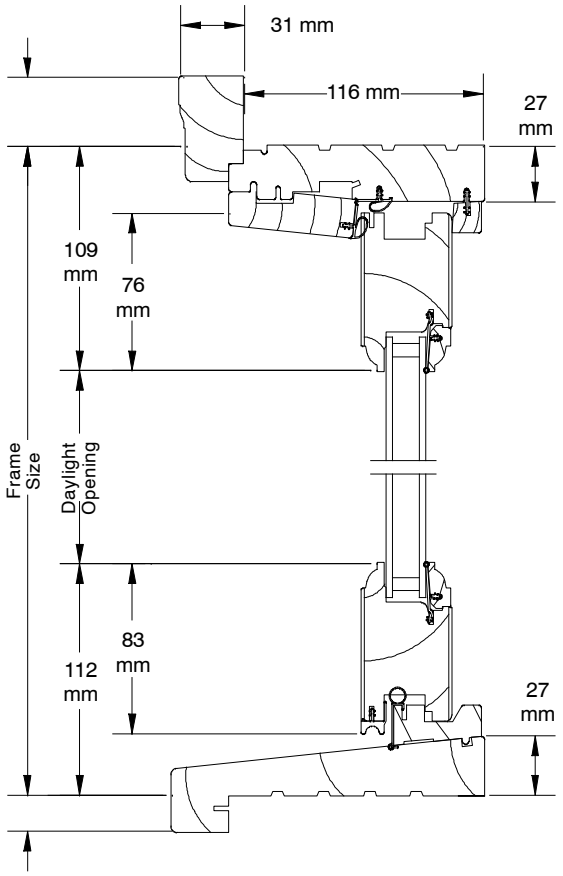

Head Jamb and Sill
In-Sash Transom

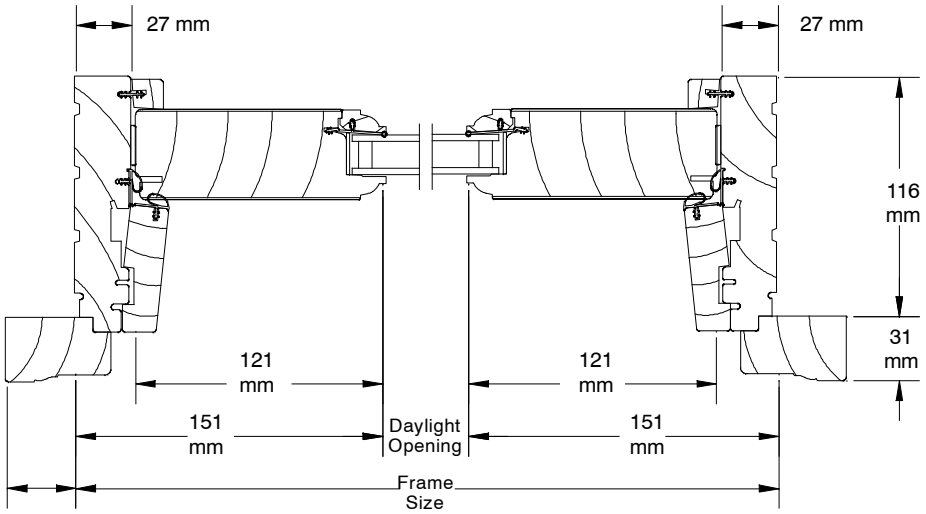

Jamb
In-Sash Transom

Section Details – Clad Ultimate Sliding French Door – Direct Glaze Transom and Mullion

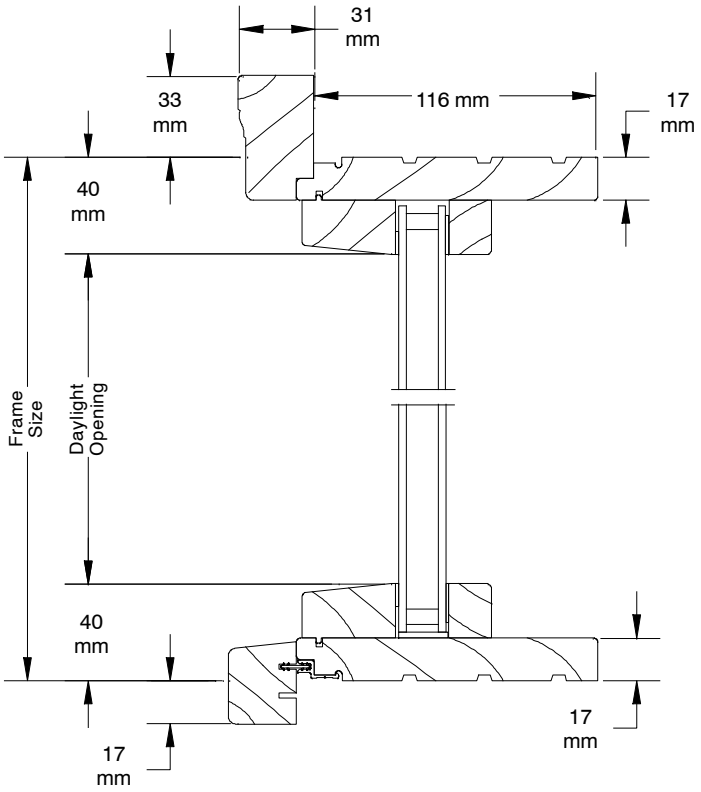

Head Jamb and Sill
Direct Glaze Transom

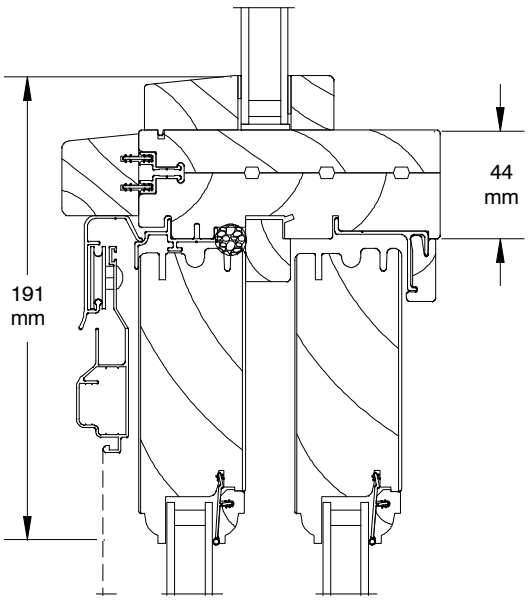

Rectangular Direct Glaze Transom
over Sliding French Door

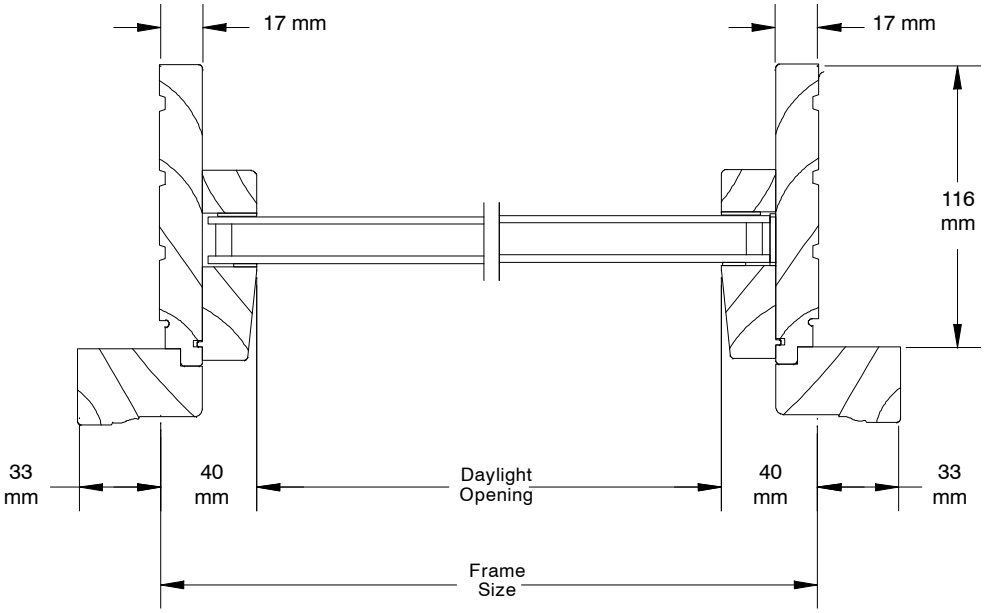

Jamb
Direct Glaze Transom

NOTE: Thermal Transmittance is calculated on a mid-size product with dual glazed Low E II coating and Argon fill.

Clad Sliding Patio Door - Performance Characteristics

Air Permiability - EN 12207	3
Watertightness - EN 12208	4A
Resistance to Wind Load - EN 12210	B1
Impact Resistance - EN13049	5
Thermal Transmittance - Low EII with Argon	1.7
Radiation Properties - Light Transmittance - Low EII with Argon	0.72
Radiation Properties - Solar Factor - Low EII with Argon	0.45

Clad Sliding Patio Door Direct Glaze Transom - Performance Characteristics

Air Permiability - EN 12207	4
Watertightness - EN 12208	E1200
Resistance to Wind Load - EN 12210	E2400C
Thermal Transmittance - Low EII with Argon	1.5
Radiation Properties - Light Transmittance - Low EII with Argon	0.72
Radiation Properties - Solar Factor - Low EII with Argon	0.44

Frame:

- Interior: Standard is Pine wood, optional Douglas Fir. Species available are Mahogany, Vertical Grain Douglas Fir, Cherry and White Oak
- Exterior: Extruded aluminum, 1.3 mm thick
- Frame thickness: 27 mm
- Frame width: 116 mm
- Fiberglass reinforced pultruded sill with water shed and weep system. Polycarbonate roller track. Beige color, optional: bronze color. Thickness: 2.5 mm. White Oak [Mahogany] [Cherry] interior sill liner

Panel:

- Interior: Standard is Pine wood, optional Douglas Fir. Species available are Mahogany, Vertical Grain Douglas Fir, Cherry and White Oak
- Panel thickness: 44 mm
- Rail and stile width: 76 mm
- Stiles contain laminated veneer lumber (LVL) core with clear pine veneers
- Removable interior vinyl glazing bead with wood glazing cap

Interior and Exterior Finish:

- Interior finish: Treated bare wood or white latex primed (Pine only)
- Exterior finish: Standard colors: Stone White, Pebble Gray, Bahama Brown, Bronze and Evergreen. Select Color: Sierra White, Coconut Cream, French Vanilla, Cashmere, Desert Beige, Cumulus Gray, Cadet Gray, Ebony, Arctic White, Cascade Blue, Cobalt Blue, Hampton Sage, Sherwood Green and Wineberry. Contact your Marvin representative for details on custom colors

Hardware:

- Optional handle set: Finish: Satin Taupe, White, Antique Brass, Brass PVD, Satin Chrome, Satin Nickel PVD, Oil Rubbed Bronze, Oil Rubbed Bronze PVD. OXXO Finish: Satin Taupe, White, Antique Brass, Brass PVD, Satin Chrome, Satin Nickel PVD, Oil Rubbed Bronze, Oil Rubbed Bronze PVD
- Locking system: Two point lock activated from handle set, non-keyed. Optional: keyed, zinc plated
- Rollers: Two adjustable steel roller assemblies per operating panel with two ball bearings per assembly. Maximum vertical adjustment: 8 mm Optional: stainless steel rollers

Weather Stripping:

- Weather Strip: Interlock weatherstrip at meeting stiles. Side jamb to have two sets of bulb weather strip maintaining contact with door panels. Continuous slip coat weather strip along sill, head jamb, and meeting stiles. Color beige, optional: black

Jamb Extensions:

- Jamb extensions factory applied up to 192 mm. Other sizes shipped loose

Insect Screens:

- Optional Aluminum Top Hung Sliding Screen with adjustable rollers and replaceable bottom guide.
  Frame colors: Standard Color: Stone White, Bahama Brown, Bronze, Pebble Gray, Evergreen. Select Color: Sierra White, Coconut Cream, French Vanilla, Cashmere, Desert Beige, Cumulus Gray, Cadet Gray, Ebony, Arctic White, Cascade Blue, Cobalt Blue, Hampton Sage, Sherwood Green and Wineberry. Contact your Marvin representative for details on custom colors. Standard mesh: 18 x 16 charcoal fiberglass
- Optional Ultimate Aluminum Top Hung Sliding Screen with adjustable roller assembly and replaceable bottom guide.
  Standard Color: Stone White, Bahama Brown, Bronze, Pebble Gray, Evergreen. Select Color: Sierra White, Coconut Cream, French Vanilla, Cashmere, Desert Beige, Cumulus Gray, Cadet Gray, Ebony, Arctic White, Cascade Blue, Cobalt Blue, Hampton Sage, Sherwood Green and Wineberry. Contact your Marvin representative for details on custom colors. Standard mesh: 18 x 16 charcoal fiberglass, contact your Marvin representative for additional screen mesh options
- Screens adjustable to 6 mm
- Optional Charcoal High Transparency screen mesh (CH Hi–Tran) 20 x 20 fiberglass

Removable Interior Grilles:

- Bar: Pine 19 mm or 29 mm
- Pattern: Rectangular, custom lite layouts available. Contact your Marvin representative

Interior / Exterior Simulated Divided lites (SDL):

- Interior bar: 22 mm or 29 mm wide bars. Standard is Pine wood, optional Douglas Fir. Species available are Mahogany, Vertical Grain Douglas Fir, Cherry and White Oak
- Exterior bar: 22 mm or 29 mm wide. Extruded aluminum. Finish to match exterior panel surface
- Insulated glass units available with or without aluminum spacer in airspace
- Pattern: rectangular. Custom lite layouts available. Contact your Marvin representative

Grilles-Between-the-glass (GBG):

- 17 mm white contoured aluminum bar. Optional flat aluminum bar
- Rectangular lite layout

Glass and Glazing:

- Door Panels: Tempered insulated glass
- Transoms: Annealed insulated glass, Optional: Tempered insulated glass
- Glazing seal: Silicone bedding, exterior
- Clear tempered glass standard, optional silicone glazed glass types: sandblasted; Laminated: Clear, White, Bronze, Gray, Green; Optional coating types: Low E II, Low E 240, and Low E 366; air filled, optional argon fill
- Capillary tubes required for higher elevations. Argon gas not available with capillary tubes

Accessories:

- Installation brackets: 162 mm, 238 mm, 391 mm
- Masonry brackets: 152 mm, 254 mm
- Nailing fin: Head jamb fin/drip cap, side jamb and sill fin. (not designed to replace proper flashing)
- Aluminum extrusions: Brick Mould Casing, Flat Casing, various special casings, Mullion Covers, Frame Expanders, Mullion Expanders

NOTE: Thermal Transmittance is calculated on a mid-size product with dual glazed Low E II coating and Argon fill.

Wood Sliding Patio Door - Performance Characteristics

Air Permiability - EN 12207	3
Watertightness - EN 12208	4A
Resistance to Wind Load - EN 12210	B1
Impact Resistance - EN13049	5
Thermal Transmittance - Low EII with Argon	1.6
Radiation Properties - Light Transmittance - Low EII with Argon	0.72
Radiation Properties - Solar Factor - Low EII with Argon	0.45

Wood Sliding Patio Door Direct Glaze Transom Performance Characteristics

Air Permiability - EN 12207	4
Watertightness - EN 12208	E1200
Resistance to Wind Load - EN 12210	E2400C
Thermal Transmittance - Low EII with Argon	1.4
Radiation Properties - Light Transmittance - Low EII with Argon	0.72
Radiation Properties - Solar Factor - Low EII with Argon	0.44

Frame:

- Interior: Pine interior and exterior standard. Optional: Mahogany, Vertical Grain Douglas Fir
- Frame thickness: 27 mm
- Frame width: 116 mm
- Fiberglass reinforced pultruded sill with water shed and weep system. Polycarbonate roller track. Beige color, optional: bronze color. Thickness: 2.5 mm. White Oak [Mahogany] [Cherry] interior sill liner

Panel:

- Interior: Pine interior and exterior standard. Optional:, Mahogany, Vertical Grain Douglas Fir
- Panel thickness: 44 mm
- Rail and stile width: 76 mm
- Stiles contain laminated veneer lumber (LVL) core with clear pine veneers
- Removable interior vinyl glazing bead with wood glazing cap
- Interior and exterior finish:
- Standard: treated bare wood Optional: white primed (pine only)

Hardware:

- Optional handle set: Finish: Satin Taupe, White, Antique Brass, Brass PVD, Satin Chrome, Satin Nickel PVD, Oil Rubbed Bronze, Oil Rubbed Bronze PVD. OXXO Finish: Satin Taupe, White, Antique Brass, Brass PVD, Satin Chrome, Satin Nickel PVD, Oil Rubbed Bronze, Oil Rubbed Bronze PVD
- Locking system: Two point lock activated from handle set, non-keyed. Optional: keyed, zinc plated
- Rollers: Two adjustable steel roller assemblies per operating panel with two ball bearings per assembly Maximum vertical adjustment: 8 mm Optional: stainless steel rollers

Weatherstripping:

- Weatherstrip: Interlock weatherstrip at meeting stiles. Side jamb to have two sets of bulb weatherstrip maintaining contact with door panels. Continuous slip coat weatherstrip along sill, head jamb, and meeting stiles. Color beige, optional: black

Jamb Extensions:

- Jamb extensions factory applied up to 192 mm. Other sizes shipped loose

Insect Screens:

- Optional Aluminum Top Hung Sliding Screen with adjustable rollers and replaceable bottom guide. Frame colors: Stone White, Bahama Brown, Bronze, Pebble Gray, or Evergreen. Standard mesh: 18 x 16 charcoal fiberglass
- Optional Ultimate Aluminum Top Hung Sliding Screen with adjustable roller assembly and replaceable bottom guide. Full screen standard mesh: 18 x 16 charcoal fiberglass, contact your Marvin representative for additional screen mesh options
- Screens adjustable to 6 mm
- Optional Charcoal High Transparency screen mesh (CH Hi–Tran) 20 x 20 fiberglass

Removable Interior Grilles:

- Bar: Pine 19 mm or 29 mm
- Pattern: Rectangular, custom lite layouts available. Contact your Marvin representative
- Interior / Exterior Simulated Divided lites (SDL):
- Interior and exterior bar: 22 mm or 29 mm wide. Pine standard. Optional: Mahogany, Vertical Grain Douglas Fir. Finish to match panel surface
- Insulated glass units available with or without aluminum spacer in airspace
- Pattern: rectangular. Custom lite layouts available. Contact your Marvin representative

Grilles-Between-the-Glass (GBG):

- 17 mm white contoured aluminum bar. Optional flat aluminum bar. Rectangular lite layout

Glass and Glazing:

- Door Panels: tempered insulated glass
- Transoms: Annealed insulated glass, Optional: Tempered insulated glass
- Glazing seal: silicone bedding, exterior
- Clear tempered glass standard, optional silicone glazed glass types: sandblasted; Laminated: Clear, White, Bronze, Gray, Green; Optional coating types: Low E II, Low E 240, and Low E 366; air filled, optional argon fill
- Capillary tubes required for higher elevations. Argon gas not available with capillary tubes

Accessories:

- Aluminum drip cap: Stone White, Bahama Brown, Bronze, Pebble Gray, Evergreen
- Installation brackets: 162 mm, 238 mm, 391 mm
- Masonry brackets: 152 mm, 254 mm

Exterior Mouldings:

- Flat casing, specify width, stucco brick mould casing, stucco flat casing, specify width. Custom wood casings available. Pine standard, optional; Mahogany, or Vertical Grain Douglas Fir

Unit Sizing / Measurements – Clad Sliding Patio Door

Clad Sliding Paito Door / Measurements			
Height			
Unit Type	**Call Number**	**Frame Size**	**Rough Opening**
All Configurations	6-6*	2019	2032
	6-8	2083	2096
	8-0	2426	2438
Width			
Unit Type	**Call Number**	**Frame Size**	**Rough Opening**
1 Panel O	2666**	811	837
	3066**	964	989
	4066**	1268	1294
	2-6	832	857
	3-0	984	1010
	4-0	1289	1314
2 Panel XO, OX	5066**	1499	1524
	6066**	1803	1829
	8066**	2413	2438
	5-0	1540	1565
	6-0	1845	1870
	6-6***	1856	1981
	8-0	2454	2480
2 Panel XO, OX	7666**	2294	2319
	9066**	2751	2777
	12066**	3666	3691
3 Panel XOO, OXX, OXO	7-6	2356	2381
	9-0	2813	2838
	12-0	3727	3753
4 Panel OXXO	10-0	3023	3048
	12-0	3632	3658

NOTE: All measurements shown are in mm.
* Available in 2666, 3066, 6066, 9066, and 8066 widths only.
** Available in Retro 6-6 height only.
*** Available in 6-8 height only.

Unit Sizing / Measurements – Wood Sliding Patio Door

Wood Sliding Patio Door Sizing / Measurements			
Height			
Unit Type	**Call Number**	**Frame Size**	**Rough Opening**
All Configurations	6-6*	2019	2032
	6-8	2083	2096
	8-0	2426	2438
Width			
Unit Type	**Call Number**	**Frame Size**	**Rough Opening**
1 Panel O	2666**	811	837
	3066**	964	989
	4066**	1268	1294
	2-6	832	857
	3-0	984	1010
	4-0	1289	1314
2 Panel XO, OX	5066**	1499	1524
	6066**	1803	1829
	8066**	2413	2438
	5-0	1540	1565
	6-0	1845	1870
	8-0	2454	2480
2 Panel XO, OX	7666**	2294	2319
	9066**	2751	2777
	12066**	3666	3691
3 Panel XOO, OXX, OXO	7-6	2356	2381
	9-0	2813	2838
	12-0	3727	3753
4 Panel OXXO	10-0	3023	3048
	12-0	3632	3658

NOTE: All measurements shown are in mm.
* Available in 2666, 3066, 6066, 9066, and 8066 widths only.
** Available in Retro 6-6 height only.

Mininimum / Maximum Measurements– Clad and Wood Sliding Patio Door

Minimum and Maximum Measurements				
Glazing Type	**Minimum RO Width**	**Minimum RO Height**	**Maximum RO Width**	**Maximum RO Height**
Wood and Clad Sliding Patio Door				
1 - Panel Stationary	457 mm	1799 mm	1314 mm	2438 mm
2 - Panel	1129 mm	1799 mm	2480 mm	2438 mm
3 - Panel	1719 mm	1799 mm	3752 mm	2438 mm
4 - Panel	2111 mm	1799 mm	3657 mm	2438 mm

MARVIN Windows and Doors

Measurement Conversions – Clad Sliding Patio Door

Measurement Conversions - 1 Panel Stationary

Size Referenced	Dimension Given	Daylight Opening (DLO)		Glass Size (GS)		Frame Size		Rough Opening		Masonry Opening (Without Casing)		Masonry Opening (With Brick Mould Casing)		Masonry Opening (With Flat Casing)	
		Dimension Needed													
Daylight Opening (DLO)				Width	+ 33 mm	Width	+ 212 mm	Width	+ 237 mm	Width	+ 225 mm	Width	+ 291 mm	Width	+ 377 mm
				Height	+ 33 mm	Height	+ 229 mm	Height	+ 241 mm	Height	+ 235 mm	Height	+ 268 mm	Height	+ 311 mm
Glass Size (GS)		Width	- 33 mm			Width	+ 179 mm	Width	+ 204 mm	Width	+ 191 mm	Width	+ 258 mm	Width	+ 344 mm
		Height	- 33 mm			Height	+ 195 mm	Height	+ 208 mm	Height	+ 202 mm	Height	+ 235 mm	Height	+ 278 mm
Frame Size		Width	- 212 mm	Width	- 179 mm			Width	+ 25 mm	Width	+ 13 mm	Width	+ 79 mm	Width	+ 165 mm
		Height	- 229 mm	Height	- 195 mm			Height	+ 13 mm	Height	+ 6 mm	Height	+ 40 mm	Height	+ 83 mm
Rough Opening		Width	- 197 mm	Width	- 204 mm	Width	- 25 mm			Width	- 13 mm	Width	+ 54 mm	Width	+ 140 mm
		Height	- 241 mm	Height	- 208 mm	Height	- 13 mm			Height	- 6 mm	Height	+ 27 mm	Height	+ 70 mm
Masonry Opening (Without Casing)		Width	- 225 mm	Width	- 191 mm	Width	- 13 mm	Width	+ 13 mm			Width	+ 67 mm	Width	+ 152 mm
		Height	- 235 mm	Height	- 202 mm	Height	- 6 mm	Height	+ 6 mm			Height	+ 33 mm	Height	+ 76 mm
Masonry Opening (With Brick Mould Casing)		Width	- 291 mm	Width	- 258 mm	Width	- 79 mm	Width	- 54 mm	Width	- 67 mm			Width	+ 86 mm
		Height	- 268 mm	Height	- 235 mm	Height	- 40 mm	Height	- 27 mm	Height	- 33 mm			Height	+ 43 mm
Masonry Opening (With Flat Casing)		Width	- 377 mm	Width	- 344 mm	Width	- 165 mm	Width	- 140 mm	Width	- 152 mm	Width	- 86 mm		
		Height	- 311mm	Height	- 278 mm	Height	- 83 mm	Height	- 70 mm	Height	- 76 mm	Height	- 43 mm		

Measurement Conversions - 2 Panel

Size Referenced	Dimension Given	Daylight Opening (DLO)		Glass Size (GS)		Frame Size		Rough Opening		Masonry Opening (Without Casing)		Masonry Opening (With Brick Mould Casing)		Masonry Opening (With Flat Casing)	
		Dimension Needed													
Daylight Opening (DLO)				Width	+ 33 mm	Width	DLO x 2 + 298 mm	Width	DLO x 2 + 324 mm	Width	DLO x 2 + 311 mm	Width	DLO x 2 + 378 mm	Width	DLO x 2 + 464 mm
				Height	+ 33 mm	Height	+ 229 mm	Height	+ 241 mm	Height	+ 235 mm	Height	+ 268 mm	Height	+ 311 mm
Glass Size (GS)		Width	- 33 mm			Width	GS x 2 + 232 mm	Width	GS x 2 + 257 mm	Width	GS x 2 + 244 mm	Width	GS x 2 + 311 mm	Width	GS x 2 + 397 mm
		Height	- 33 mm			Height	+ 195 mm	Height	+ 208 mm	Height	+ 202 mm	Height	+ 235 mm	Height	+ 278 mm
Frame Size		Width	- 298 mm ÷ 2	Width	- 232 mm ÷ 2			Width	+ 25 mm	Width	+ 13 mm	Width	+ 79 mm	Width	+ 165 mm
		Height	- 229 mm	Height	- 195 mm			Height	+ 13 mm	Height	+ 6 mm	Height	+ 40 mm	Height	+ 83 mm
Rough Opening		Width	- 324 mm ÷ 2	Width	- 257 mm ÷ 2	Width	- 25 mm			Width	- 13 mm	Width	+ 54 mm	Width	+ 140 mm
		Height	- 241 mm	Height	- 208 mm	Height	- 13 mm			Height	- 6 mm	Height	+ 27 mm	Height	+ 70 mm
Masonry Opening (Without Casing)		Width	- 311 mm ÷ 2	Width	- 244 mm ÷ 2	Width	- 13 mm	Width	+ 13 mm			Width	+ 67 mm	Width	+ 152 mm
		Height	- 235 mm	Height	- 202 mm	Height	- 6 mm	Height	+ 6 mm			Height	+ 33 mm	Height	+ 76 mm
Masonry Opening (With Brick Mould Casing)		Width	- 378 mm ÷ 2	Width	- 311 mm ÷ 2	Width	- 79 mm	Width	- 54 mm	Width	- 67 mm			Width	+ 86 mm
		Height	- 268 mm	Height	- 235 mm	Height	- 40 mm	Height	- 27 mm	Height	- 33 mm			Height	+ 43 mm
Masonry Opening (With Flat Casing)		Width	- 464 mm ÷ 2	Width	- 397 mm ÷ 2	Width	- 165 mm	Width	- 140 mm	Width	- 152 mm	Width	- 86 mm		
		Height	- 311mm	Height	- 278 mm	Height	- 83 mm	Height	- 70 mm	Height	- 76 mm	Height	- 43 mm		

MARVIN Windows and Doors

Measurement Conversions – Clad Sliding Patio Door

Measurement Conversions – 3 Panel

Size Referenced	Dimension Given	Daylight Opening (DLO)		Glass Size (GS)		Frame Size		Rough Opening		Masonry Opening (Without Casing)		Masonry Opening (With Brick Mould Casing)		Masonry Opening (With Flat Casing)	
		Dimension Needed													
Daylight Opening (DLO)				Width	+ 33 mm	Width	DLO x 3 + 493 mm	Width	DLO x 3 + 518 mm	Width	DLO x 3 + 506 mm	Width	DLO x 3 + 572 mm	Width	DLO x 3 + 658 mm
				Height	+ 33 mm	Height	+ 229 mm	Height	+ 241 mm	Height	+ 235 mm	Height	+ 268 mm	Height	+ 311 mm
Glass Size (GS)		Width	- 33 mm			Width	GS x 3 + 393 mm	Width	GS x 3 + 418 mm	Width	GS x 3 + 406 mm	Width	GS x 3 + 472 mm	Width	GS x 3 + 558 mm
		Height	- 33 mm			Height	+ 195 mm	Height	+ 208 mm	Height	+ 202 mm	Height	+ 235 mm	Height	+ 278 mm
Frame Size		Width	- 493 mm ÷ 3	Width	- 393 mm ÷ 3			Width	+ 25 mm	Width	+ 13 mm	Width	+ 79 mm	Width	+ 165 mm
		Height	- 229 mm	Height	- 195 mm			Height	+ 13 mm	Height	+ 6 mm	Height	+ 40 mm	Height	+ 83 mm
Rough Opening		Width	- 518 mm ÷ 3	Width	- 418 mm ÷ 3	Width	- 25 mm			Width	- 13 mm	Width	+ 54 mm	Width	+ 140 mm
		Height	- 241 mm	Height	- 208 mm	Height	- 13 mm			Height	- 6 mm	Height	+ 27 mm	Height	+ 70 mm
Masonry Opening (Without Casing)		Width	- 506 mm ÷ 3	Width	- 406 mm ÷ 3	Width	- 13 mm	Width	+ 13 mm			Width	+ 67 mm	Width	+ 152 mm
		Height	- 235 mm	Height	- 202 mm	Height	- 6 mm	Height	+ 6 mm			Height	+ 33 mm	Height	+ 76 mm
Masonry Opening (With Brick Mould Casing)		Width	- 572 mm ÷ 3	Width	- 472 mm ÷ 3	Width	- 79 mm	Width	- 54 mm	Width	- 67 mm			Width	+ 86 mm
		Height	- 268 mm	Height	- 235 mm	Height	- 40 mm	Height	- 27 mm	Height	- 33 mm			Height	+ 43 mm
Masonry Opening (With Flat Casing)		Width	- 558 mm ÷ 3	Width	- 558 mm ÷ 3	Width	- 165 mm	Width	- 140 mm	Width	- 152 mm	Width	- 86 mm		
		Height	- 311mm	Height	- 278 mm	Height	- 83 mm	Height	- 70 mm	Height	- 76 mm	Height	- 43 mm		

Measurement Conversions – 4 Panel

Size Referenced	Dimension Given	Daylight Opening (DLO)		Glass Size (GS)		Frame Size		Rough Opening		Masonry Opening (Without Casing)		Masonry Opening (With Brick Mould Casing)		Masonry Opening (With Flat Casing)	
		Dimension Needed													
Daylight Opening (DLO)				Width	+ 33 mm	Width	DLO x 4 + 540 mm	Width	DLO x 4 + 565 mm	Width	DLO x 4 + 552 mm	Width	DLO x 4 + 619 mm	Width	DLO x 4 + 705 mm
				Height	+ 33 mm	Height	+ 229 mm	Height	+ 241 mm	Height	+ 235 mm	Height	+ 268 mm	Height	+ 311 mm
Glass Size (GS)		Width	- 33 mm			Width	GS x 4 + 406 mm	Width	GS x 4 + 432 mm	Width	GS x 4 + 419 mm	Width	GS x 4 + 486 mm	Width	GS x 4 + 572 mm
		Height	- 33 mm			Height	+ 195 mm	Height	+ 208 mm	Height	+ 202 mm	Height	+ 235 mm	Height	+ 278 mm
Frame Size		Width	- 540 mm ÷ 4	Width	- 406 mm ÷ 4			Width	+ 25 mm	Width	+ 13 mm	Width	+ 79 mm	Width	+ 165 mm
		Height	- 229 mm	Height	- 195 mm			Height	+ 13 mm	Height	+ 6 mm	Height	+ 40 mm	Height	+ 83 mm
Rough Opening		Width	- 565 mm ÷ 4	Width	- 432 mm ÷ 4	Width	- 25 mm			Width	- 13 mm	Width	+ 54 mm	Width	+ 140 mm
		Height	- 241 mm	Height	- 208 mm	Height	- 13 mm			Height	- 6 mm	Height	+ 27 mm	Height	+ 70 mm
Masonry Opening (Without Casing)		Width	- 552 mm ÷ 4	Width	- 419 mm ÷ 4	Width	- 13 mm	Width	+ 13 mm			Width	+ 67 mm	Width	+ 152 mm
		Height	- 235 mm	Height	- 202 mm	Height	- 6 mm	Height	+ 6 mm			Height	+ 33 mm	Height	+ 76 mm
Masonry Opening (With Brick Mould Casing)		Width	- 619 mm ÷ 4	Width	- 486 mm ÷ 4	Width	- 79 mm	Width	- 54 mm	Width	- 67 mm			Width	+ 86 mm
		Height	- 268 mm	Height	- 235 mm	Height	- 40 mm	Height	- 27 mm	Height	- 33 mm			Height	+ 43 mm
Masonry Opening (With Flat Casing)		Width	- 705 mm ÷ 4	Width	- 572 mm ÷ 4	Width	- 165 mm	Width	- 140 mm	Width	- 152 mm	Width	- 86 mm		
		Height	- 311mm	Height	- 278 mm	Height	- 83 mm	Height	- 70 mm	Height	- 76 mm	Height	- 43 mm		

Measurement Conversions – Wood Sliding Patio Door

Measurement Conversions – 1 Panel Stationary										
Size Referenced		**Daylight Opening** (DLO)		**Glass Size** (GS)		**Frame Size**		**Rough Opening**		**Masonry Opening** (With Brick Mould Casing)	
		Dimension Needed									
Daylight Opening (DLO)				Width	+ 33 mm	Width	+ 212 mm	Width	+ 237 mm	Width	+ 291 mm
				Height	+ 33 mm	Height	+ 229 mm	Height	+ 241 mm	Height	+ 268 mm
Glass Size (GS)		Width	- 33 mm			Width	+ 179 mm	Width	+ 204 mm	Width	+ 258 mm
		Height	- 33 mm			Height	+ 195 mm	Height	+ 208 mm	Height	+ 235 mm
Frame Size		Width	- 212 mm	Width	- 179 mm			Width	+ 25 mm	Width	+ 79 mm
		Height	- 229 mm	Height	- 195 mm			Height	+ 13 mm	Height	+ 40 mm
Rough Opening		Width	- 197 mm	Width	- 204 mm	Width	- 25 mm			Width	+ 54 mm
		Height	- 241 mm	Height	- 208 mm	Height	- 13 mm			Height	+ 27 mm
Masonry Opening (With Brick Mould Casing)		Width	- 291 mm	Width	- 258 mm	Width	- 79 mm	Width	- 54 mm		
		Height	- 268 mm	Height	- 235 mm	Height	- 40 mm	Height	- 27 mm		

Dimension Given

Measurement Conversions – 2 Panel										
Size Referenced		**Daylight Opening** (DLO)		**Glass Size** (GS)		**Frame Size**		**Rough Opening**		**Masonry Opening** (With Brick Mould Casing)	
		Dimension Needed									
Daylight Opening (DLO)				Width	+ 33 mm	Width	DLO x 2 + 298 mm	Width	DLO x 2 + 324 mm	Width	DLO x 2 + 378 mm
				Height	+ 33 mm	Height	+ 229 mm	Height	+ 241 mm	Height	+ 268 mm
Glass Size (GS)		Width	- 33 mm			Width	GS x 2 + 232 mm	Width	GS x 2 + 257 mm	Width	GS x 2 + 311 mm
		Height	- 33 mm			Height	+ 195 mm	Height	+ 208 mm	Height	+ 235 mm
Frame Size		Width	- 298 mm ÷ 2	Width	- 232 mm ÷ 2			Width	+ 25 mm	Width	+ 79 mm
		Height	- 229 mm	Height	- 195 mm			Height	+ 13 mm	Height	+ 40 mm
Rough Opening		Width	- 324 mm ÷ 2	Width	- 257 mm ÷ 2	Width	- 25 mm			Width	+ 54 mm
		Height	- 241 mm	Height	- 208 mm	Height	- 13 mm			Height	+ 27 mm
Masonry Opening (With Brick Mould Casing)		Width	- 378 mm ÷ 2	Width	- 311 mm ÷ 2	Width	- 79 mm	Width	- 54 mm		
		Height	- 268 mm	Height	- 235 mm	Height	- 40 mm	Height	- 27 mm		

Dimension Given

Measurement Conversions – Wood Sliding Patio Door

Measurement Conversions – 3 Panel											
Size Referenced		**Daylight Opening** (DLO)		**Glass Size** (GS)		**Frame Size**		**Rough Opening**		**Masonry Opening** (With Brick Mould Casing)	
		Dimension Needed									
Daylight Opening (DLO)				Width	+ 33 mm	Width	DLO x 3 + 493 mm	Width	DLO x 3 + 518 mm	Width	DLO x 3 + 572 mm
				Height	+ 33 mm	Height	+ 229 mm	Height	+ 241 mm	Height	+ 268 mm
Glass Size (GS)		Width	- 33 mm			Width	GS x 3 + 393 mm	Width	GS x 3 + 418 mm	Width	GS x 3 + 472 mm
		Height	- 33 mm			Height	+ 195 mm	Height	+ 208 mm	Height	+ 235 mm
Frame Size		Width	- 493 mm ÷ 3	Width	- 393 mm ÷ 3			Width	+ 25 mm	Width	+ 79 mm
		Height	- 229 mm	Height	- 195 mm			Height	+ 13 mm	Height	+ 40 mm
Rough Opening		Width	- 518 mm ÷ 3	Width	- 418 mm ÷ 3	Width	- 25 mm			Width	+ 54 mm
		Height	- 241 mm	Height	- 208 mm	Height	- 13 mm			Height	+ 27 mm
Masonry Opening (With Brick Mould Casing)		Width	- 572 mm ÷ 3	Width	- 472 mm ÷ 3	Width	- 79 mm	Width	- 54 mm		
		Height	- 268 mm	Height	- 235 mm	Height	- 40 mm	Height	- 27 mm		

Dimension Given

Measurement Conversions – 4 Panel											
Size Referenced		**Daylight Opening** (DLO)		**Glass Size** (GS)		**Frame Size**		**Rough Opening**		**Masonry Opening** (With Brick Mould Casing)	
		Dimension Needed									
Daylight Opening (DLO)				Width	+ 33 mm	Width	DLO x 4 + 540 mm	Width	DLO x 4 + 565 mm	Width	DLO x 4 + 619 mm
				Height	+ 33 mm	Height	+ 229 mm	Height	+ 241 mm	Height	+ 268 mm
Glass Size (GS)		Width	- 33 mm			Width	GS x 4 + 406 mm	Width	GS x 4 + 432 mm	Width	GS x 4 + 486 mm
		Height	- 33 mm			Height	+ 195 mm	Height	+ 208 mm	Height	+ 235 mm
Frame Size		Width	- 540 mm ÷ 4	Width	- 406 mm ÷ 4			Width	+ 25 mm	Width	+ 79 mm
		Height	- 229 mm	Height	- 195 mm			Height	+ 13 mm	Height	+ 40 mm
Rough Opening		Width	- 565 mm ÷ 4	Width	- 432 mm ÷ 4	Width	- 25 mm			Width	+ 54 mm
		Height	- 241 mm	Height	- 208 mm	Height	- 13 mm			Height	+ 27 mm
Masonry Opening (With Brick Mould Casing)		Width	- 619 mm ÷ 4	Width	- 486 mm ÷ 4	Width	- 79 mm	Width	- 54 mm		
		Height	- 268 mm	Height	- 235 mm	Height	- 40 mm	Height	- 27 mm		

Dimension Given

Head Jamb and Sill

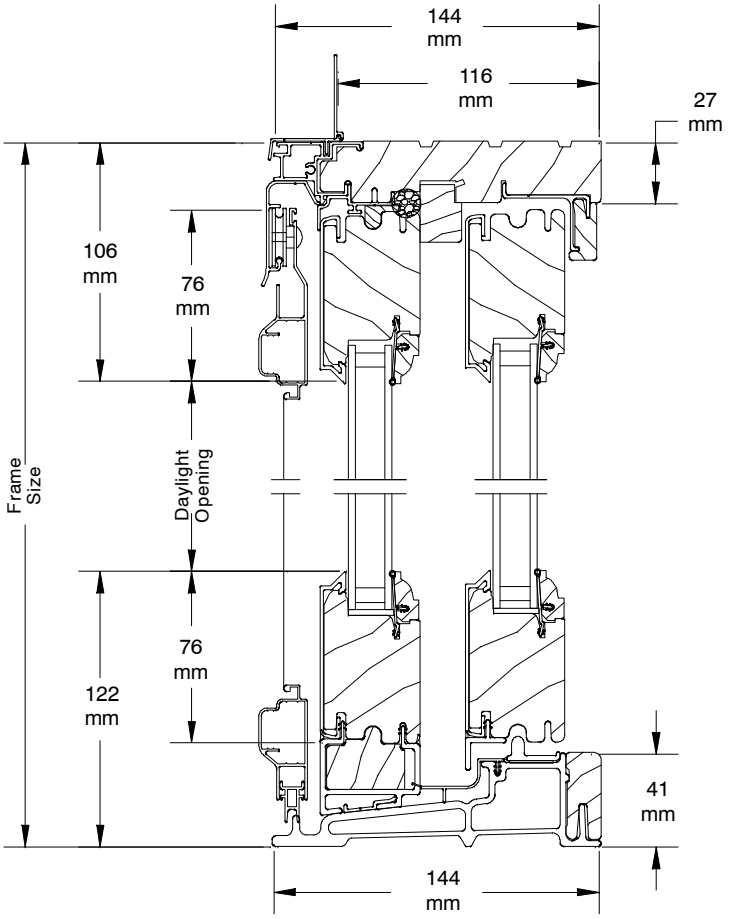

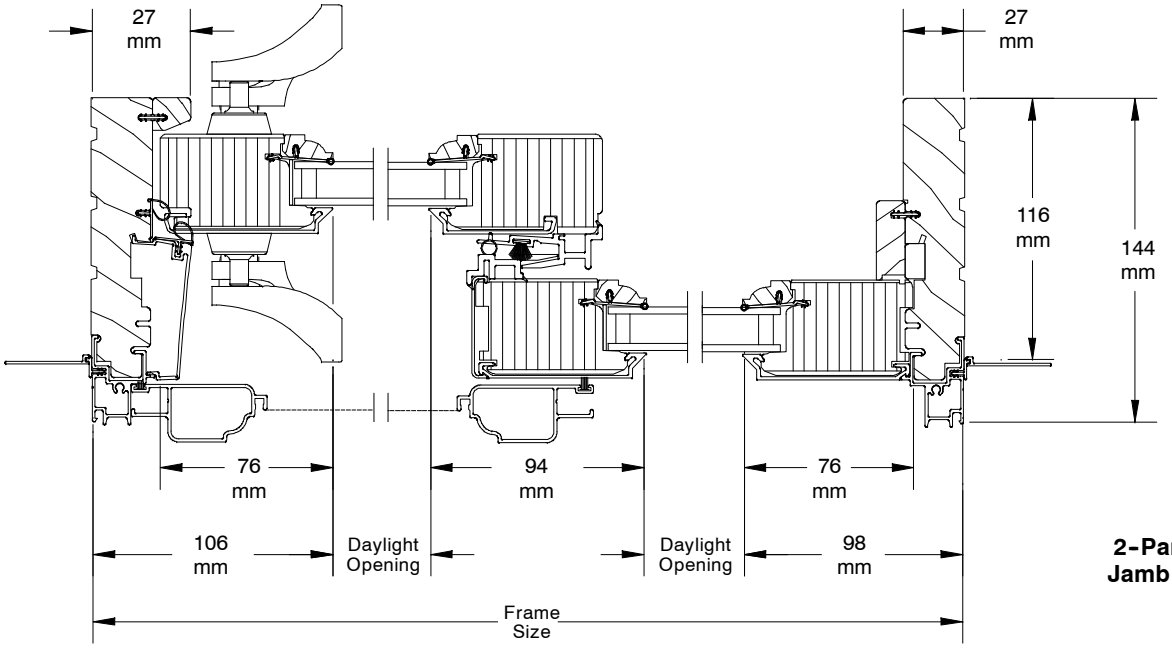

2-Panel Jamb XO

Head Jamb and Sill

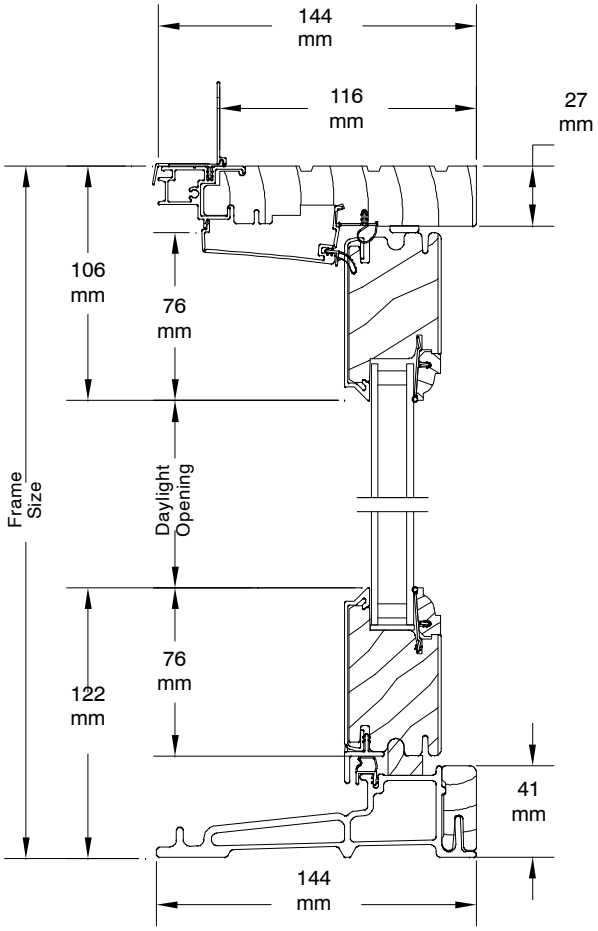

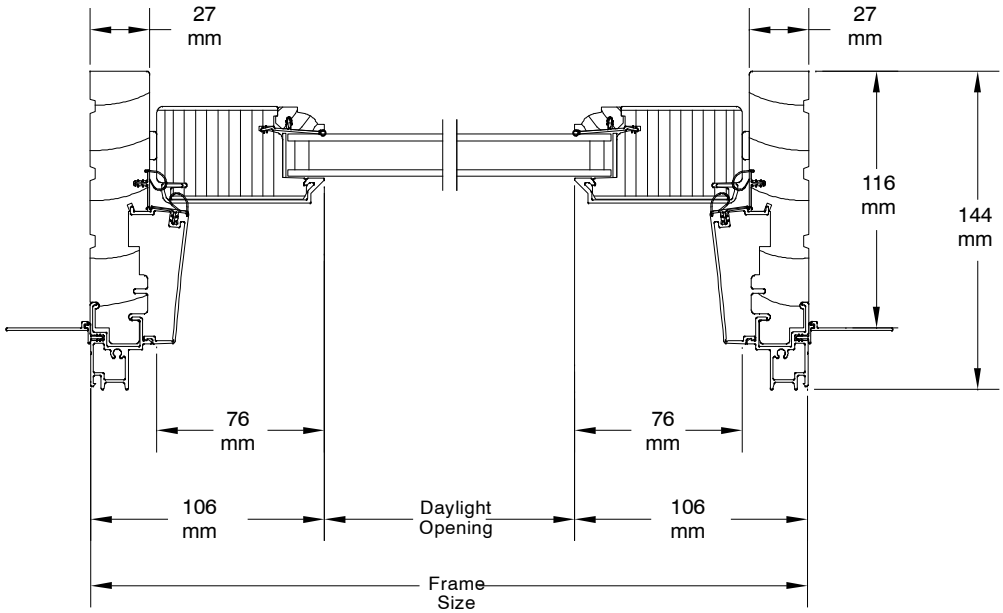

2-Panel Jamb XO

Head Jamb and Sill

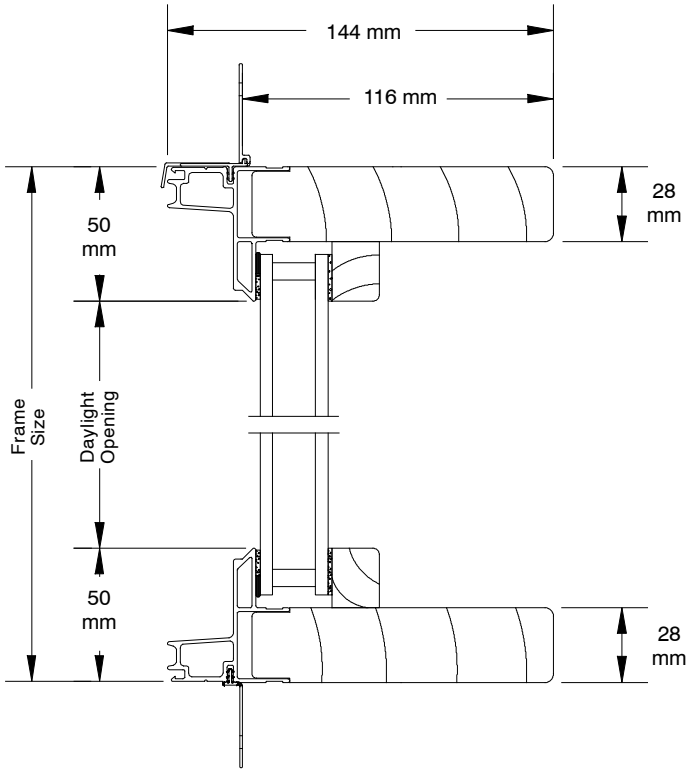

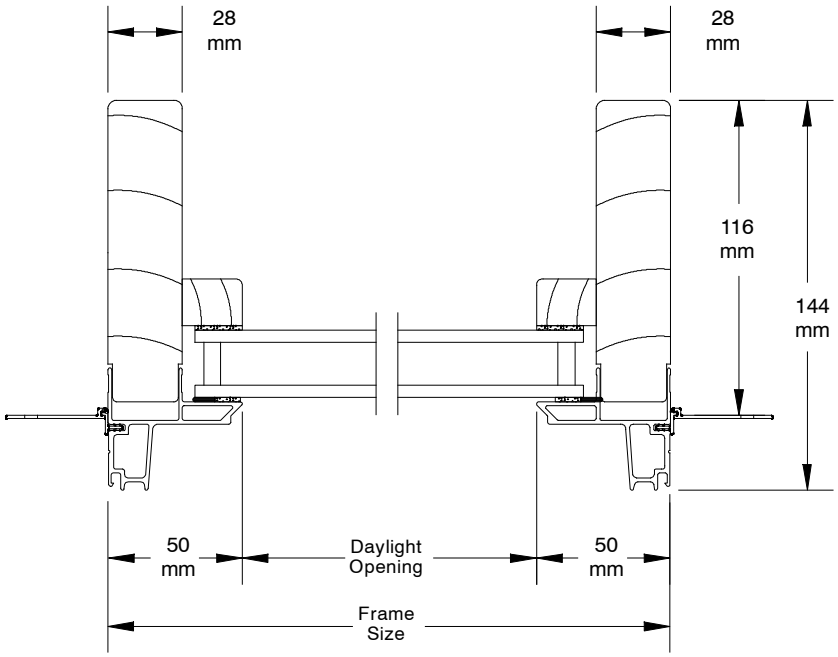

Jambs

Head Jamb and Sill

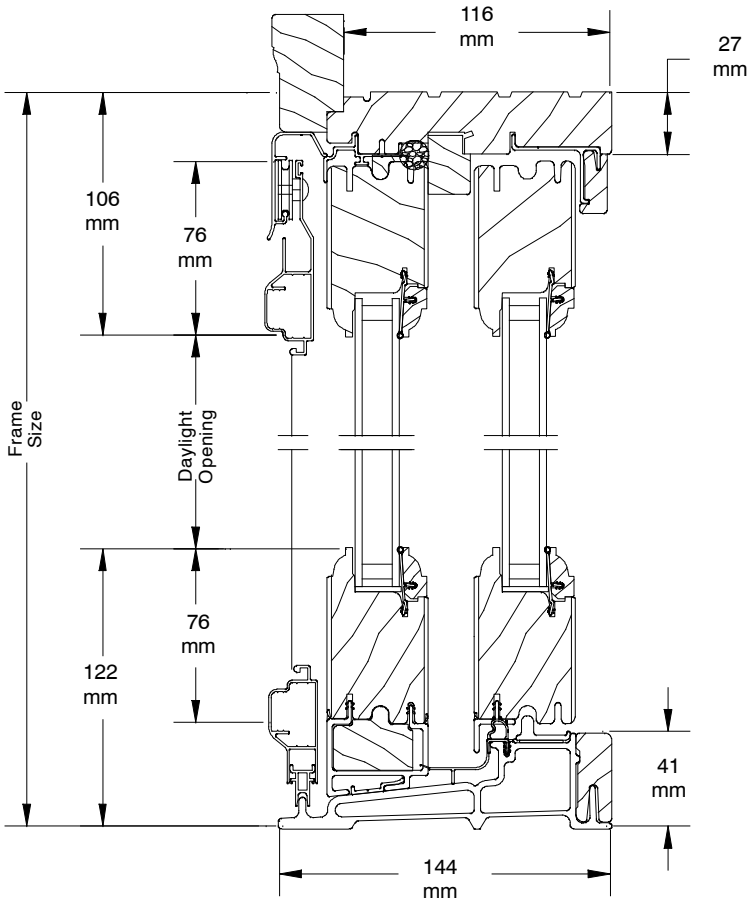

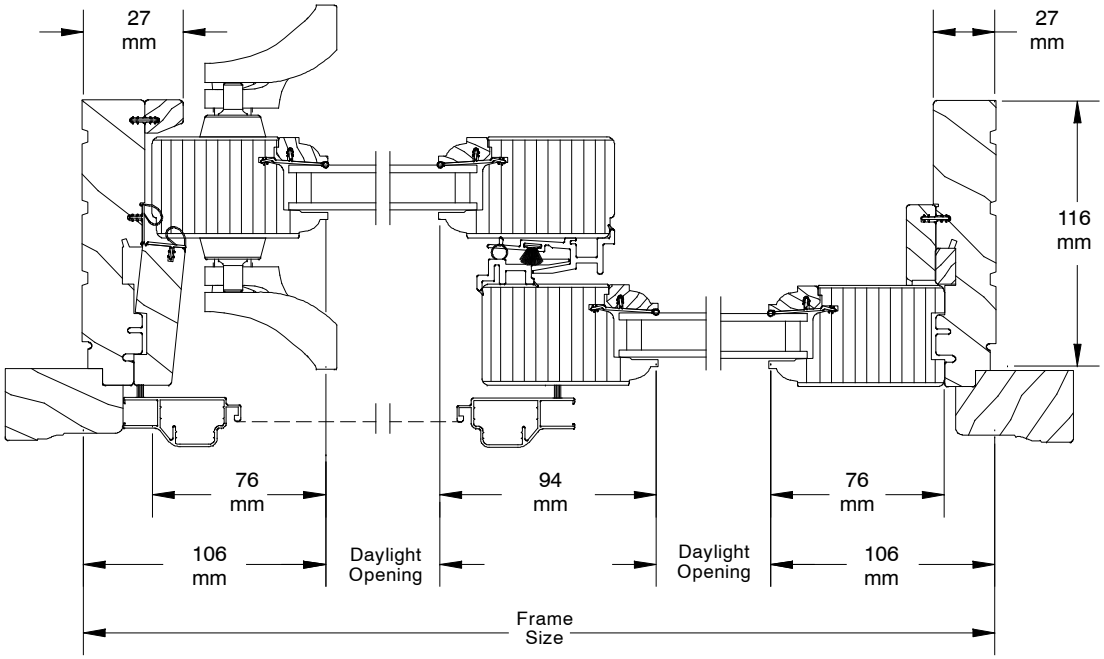

2-Panel Jamb XO

Head Jamb and Sill

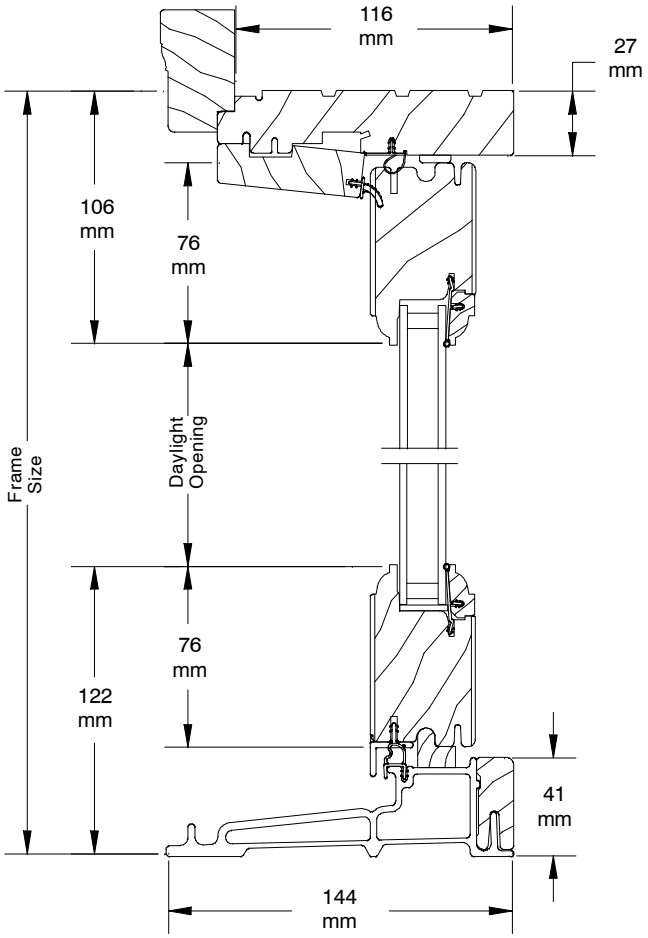

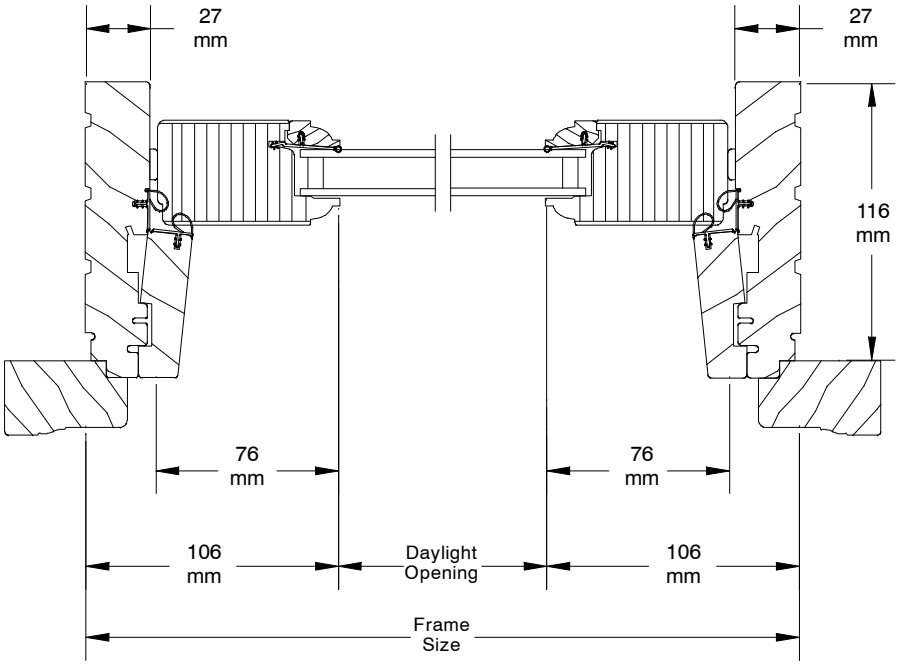

2-Panel Jamb XO

Section Details – Wood Sliding Patio Door – Direct Glaze

Head Jamb and Sill

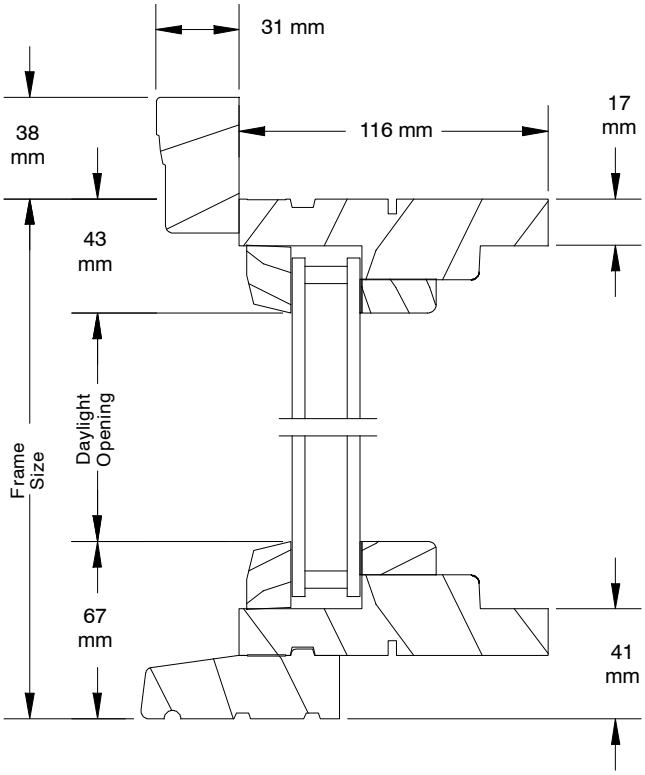

Jambs

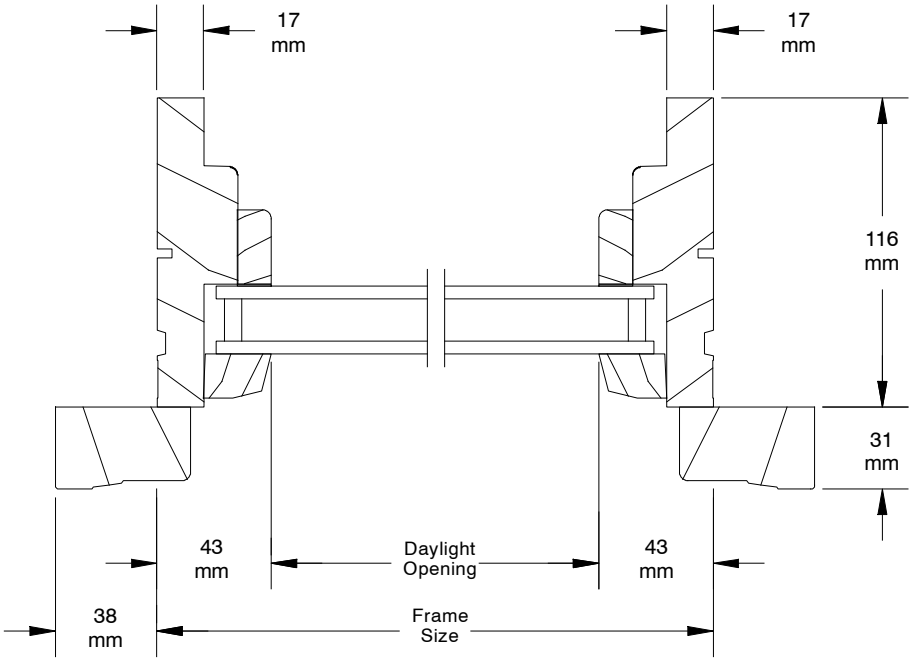

Marvin, the yellow rose, and Built around you are trademarks of Marvin Windows and Doors, registered in the US and/or other countries.

E-Gard® is a trademark of Truth Hardware.

©2008 Marvin Windows and Doors. All rights reserved.
Part #19971068

CE European Technical Manual