Wood Ultimate Push Out French Casement

Unit Features 1
Egress and Vent Openings 2
Daylight Measurements 3
Minimum and Maximum Guidelines, Certified Sizes and Rating 4
Conversion Tables 5
Standard Unit Measurements 6
Section Details: 3/4" IG Operator 7
Section Details: 3/4" IG Stationary 8
Section Details: 1" IG Operator 9
Section Details: 1" IG Stationary 10
Section Details: 3/4" IG and 1" IG Operator/Stationary Wide Bottom Rail Option 11

Unit Features

Wood Ultimate Push Out French Casement: WUPFCA

Wood Ultimate Push Out French Casement units feature two (2) sashes, that when open there is no mull post in the middle. (LH-Primary sash from exterior) (RH-Secondary sash from exterior)

WUPFCA Hardware

- The primary sash includes a multi-point lock system with head and sill shoot bolts mounted flush to the side of the sash stile.
- The secondary sash includes a lock system with head and sill shoot bolts mounted flush to the side of the sash stile.
- "The primary and secondary sash shoot bolts engage with a strike plate which is surface mounted to the head and sill.
- The lock system for both primary and secondary sash is each actuated by a single lock handle mounted on the interior face of the stile.
- The Push Out actuator lock is available in Brass (plated), Antique Brass (plated), and Satin Nickel (plated).
- The Push Out model features a robust adjustable friction limiter device to hold and lock the sash at multiple points.
- The hinges for CUPFCA are connected to the sill and to the head jamb and are coated with E-Guard®. The hinges on 36" (914) wide to under 40" (1016) do not feature the wash/egress option, and use a 10" Dyad Hinge. Units that are 40" (1016) to under 51" (1295) use an 18" wash/egress hinge and units that are 51" (1295) to under 60" (1524) use a 22" wash/egress hinge. Coastal packages (stainless steel hinges) are also available.
- The standard crank handles are folding handles. The standard finish is Oil Rubbed Bronze with options for Satin Nickel, Brass and Antique Brass.

Egress and Vent Openings

CN	Clear Opening Width		Clear Opening Height		Egress Opening			Opening Vent Width		Opening Vent Height		Vent Opening	
	ft - in	mm	ft - in	mm	ft^2	m^2	E	ft - in	mm	ft - in	mm	ft^2	m^2
3632	1-8 7/8	(530)	2-3 3/32	(688)	3.93	(0.36)		2-8 15/16	(837)	2-3 3/32	(688)	6.19	(0.58)
3636	1-8 7/8	(530)	2-7 3/32	(789)	4.51	(0.42)		2-8 15/16	(837)	2-7 3/32	(789)	7.11	(0.66)
3640	1-8 7/8	(530)	2-11 3/32	(891)	5.09	(0.47)		2-8 15/16	(837)	2-11 3/32	(891)	8.02	(0.75)
3644	1-8 7/8	(530)	3-3 3/32	(993)	5.67	(0.53)		2-8 15/16	(837)	3-3 3/32	(993)	8.94	(0.83)
3648	1-8 7/8	(530)	3-7 3/32	(1094)	6.25	(0.58)	E	2-8 15/16	(837)	3-7 3/32	(1094)	9.85	(0.92)
3654	1-8 7/8	(530)	4-1 3/32	(1247)	7.12	(0.66)	E	2-8 15/16	(837)	4-1 3/32	(1247)	11.23	(1.04)
3656	1-8 7/8	(530)	4-3 3/32	(1297)	7.41	(0.69)	E	2-8 15/16	(837)	4-3 3/32	(1297)	11.68	(1.09)
3660	1-8 7/8	(530)	4-7 3/32	(1399)	7.99	(0.74)	E	2-8 15/16	(837)	4-7 3/32	(1399)	12.60	(1.17)
3664	1-8 7/8	(530)	4-11 3/32	(1501)	8.57	(0.80)	E	2-8 15/16	(837)	4-11 3/32	(1501)	13.51	(1.26)
3672 T	1-8 7/8	(530)	5-7 3/32	(1704)	9.73	(0.90)	E	2-8 15/16	(837)	5-7 3/32	(1704)	15.34	(1.43)
4032	2-5 7/8	(758)	2-3 3/32	(688)	5.61	(0.52)		3-0 15/16	(938)	2-3 3/32	(688)	6.95	(0.65)
4036	2-5 7/8	(758)	2-7 3/32	(789)	6.44	(0.60)	E	3-0 15/16	(938)	2-7 3/32	(789)	7.97	(0.74)
4040	2-5 7/8	(758)	2-11 3/32	(891)	7.27	(0.68)	E	3-0 15/16	(938)	2-11 3/32	(891)	9.00	(0.84)
4044	2-5 7/8	(758)	3-3 3/32	(993)	8.10	(0.75)	E	3-0 15/16	(938)	3-3 3/32	(993)	10.02	(0.93)
4048	2-5 7/8	(758)	3-7 3/32	(1094)	8.93	(0.83)	E	3-0 15/16	(938)	3-7 3/32	(1094)	11.05	(1.03)
4054	2-5 7/8	(758)	4-1 3/32	(1247)	10.17	(0.95)	E	3-0 15/16	(938)	4-1 3/32	(1247)	12.59	(1.17)
4056	2-5 7/8	(758)	4-3 3/32	(1297)	10.59	(0.98)	E	3-0 15/16	(938)	4-3 3/32	(1297)	13.10	(1.22)
4060	2-5 7/8	(758)	4-7 3/32	(1399)	11.42	(1.06)	E	3-0 15/16	(938)	4-7 3/32	(1399)	14.13	(1.31)
4064	2-5 7/8	(758)	4-11 3/32	(1501)	12.25	(1.14)	E	3-0 15/16	(938)	4-11 3/32	(1501)	15.15	(1.41)
4072 T	2-5 7/8	(758)	5-7 3/32	(1704)	13.90	(1.29)	E	3-0 15/16	(938)	5-7 3/32	(1704)	17.21	(1.60)
4832	3-1 7/8	(961)	2-3 3/32	(688)	7.12	(0.66)	E	3-8 15/16	(1141)	2-3 3/32	(688)	8.45	(0.79)
4836	3-1 7/8	(961)	2-7 3/32	(789)	8.17	(0.76)	E	3-8 15/16	(1141)	2-7 3/32	(789)	9.70	(0.90)
4840	3-1 7/8	(961)	2-11 3/32	(891)	9.22	(0.86)	E	3-8 15/16	(1141)	2-11 3/32	(891)	10.95	(1.02)
4844	3-1 7/8	(961)	3-3 3/32	(993)	10.27	(0.95)	E	3-8 15/16	(1141)	3-3 3/32	(993)	12.20	(1.13)
4848	3-1 7/8	(961)	3-7 3/32	(1094)	11.32	(1.05)	E	3-8 15/16	(1141)	3-7 3/32	(1094)	13.44	(1.25)
4854	3-1 7/8	(961)	4-1 3/32	(1247)	12.90	(1.20)	E	3-8 15/16	(1141)	4-1 3/32	(1247)	15.32	(1.42)
4856	3-1 7/8	(961)	4-3 3/32	(1297)	13.42	(1.25)	E	3-8 15/16	(1141)	4-3 3/32	(1297)	15.94	(1.48)
4860	3-1 7/8	(961)	4-7 3/32	(1399)	14.48	(1.34)	E	3-8 15/16	(1141)	4-7 3/32	(1399)	17.19	(1.60)
4864	3-1 7/8	(961)	4-11 3/32	(1501)	15.53	(1.44)	E	3-8 15/16	(1141)	4-11 3/32	(1501)	18.44	(1.71)
4872 T	3-1 7/8	(961)	5-7 3/32	(1704)	17.63	(1.64)	E	3-8 15/16	(1141)	5-7 3/32	(1704)	20.93	(1.94)
5632	3-9 7/8	(1164)	2-3 3/32	(688)	8.62	(0.80)	E	4-4 15/16	(1345)	2-3 3/32	(688)	9.96	(0.92)
5636	3-9 7/8	(1164)	2-7 3/32	(789)	9.90	(0.92)	E	4-4 15/16	(1345)	2-7 3/32	(789)	11.43	(1.06)
5640	3-9 7/8	(1164)	2-11 3/32	(891)	11.17	(1.04)	E	4-4 15/16	(1345)	2-11 3/32	(891)	12.90	(1.20)
5644	3-9 7/8	(1164)	3-3 3/32	(993)	12.44	(1.16)	E	4-4 15/16	(1345)	3-3 3/32	(993)	14.37	(1.33)
5648	3-9 7/8	(1164)	3-7 3/32	(1094)	13.72	(1.27)	E	4-4 15/16	(1345)	3-7 3/32	(1094)	15.84	(1.47)
5654	3-9 7/8	(1164)	4-1 3/32	(1247)	15.63	(1.45)	E	4-4 15/16	(1345)	4-1 3/32	(1247)	18.04	(1.68)
5656	3-9 7/8	(1164)	4-3 3/32	(1297)	16.26	(1.51)	E	4-4 15/16	(1345)	4-3 3/32	(1297)	18.78	(1.74)
5660	3-9 7/8	(1164)	4-7 3/32	(1399)	17.54	(1.63)	E	4-4 15/16	(1345)	4-7 3/32	(1399)	20.25	(1.88)
5664	3-9 7/8	(1164)	4-11 3/32	(1501)	18.81	(1.75)	E	4-4 15/16	(1345)	4-11 3/32	(1501)	21.72	(2.02)
5672 T	3-9 7/8	(1164)	5-7 3/32	(1704)	21.36	(1.98)	E	4-4 15/16	(1345)	5-7 3/32	(1704)	24.66	(2.29)
6032	4-1 7/8	(1266)	2-3 3/32	(688)	9.37	(0.87)	E	4-8 15/16	(1446)	2-3 3/32	(688)	10.71	(0.99)
6036	4-1 7/8	(1266)	2-7 3/32	(789)	10.76	(1.00)	E	4-8 15/16	(1446)	2-7 3/32	(789)	12.29	(1.14)
6040	4-1 7/8	(1266)	2-11 3/32	(891)	12.14	(1.13)	E	4-8 15/16	(1446)	2-11 3/32	(891)	13.87	(1.29)
6044	4-1 7/8	(1266)	3-3 3/32	(993)	13.53	(1.26)	E	4-8 15/16	(1446)	3-3 3/32	(993)	15.45	(1.44)
6048	4-1 7/8	(1266)	3-7 3/32	(1094)	14.91	(1.39)	E	4-8 15/16	(1446)	3-7 3/32	(1094)	17.03	(1.58)
6054	4-1 7/8	(1266)	4-1 3/32	(1247)	16.99	(1.58)	E	4-8 15/16	(1446)	4-1 3/32	(1247)	19.41	(1.80)
6056	4-1 7/8	(1266)	4-3 3/32	(1297)	17.68	(1.64)	E	4-8 15/16	(1446)	4-3 3/32	(1297)	20.20	(1.88)
6060	4-1 7/8	(1266)	4-7 3/32	(1399)	19.07	(1.77)	E	4-8 15/16	(1446)	4-7 3/32	(1399)	21.78	(2.02)
6064 T	4-1 7/8	(1266)	4-11 3/32	(1501)	20.45	(1.90)	E	4-8 15/16	(1446)	4-11 3/32	(1501)	23.36	(2.17)
6072 T	4-1 7/8	(1266)	5-7 3/32	(1704)	23.22	(2.16)	E	4-8 15/16	(1446)	5-7 3/32	(1704)	26.52	(2.46)

Daylight Measurements

Wood Ultimate Push Out French Casement Daylight Measurements		Width									
		CN	36		40		48		56		60	
		DLO	2-1 23/32	(653)	2-5 23/32	(755)	3-1 23/32	(958)	3-9 23/32	(1161)	4-1 23/32	(1263)
CN	DLO Height		Square Feet (Square Meters)									
			Standard Bottom Rail									
32	2-1 11/32	(643)	4.53	(0.42)	5.23	(0.49)	6.64	(0.62)	8.04	(0.75)	8.75	(0.81)
36	2-5 11/32	(745)	5.24	(0.49)	6.06	(0.56)	7.68	(0.71)	9.31	(0.87)	10.13	(0.94)
40	2-9 11/32	(847)	5.96	(0.55)	6.88	(0.64)	8.73	(0.81)	10.58	(0.98)	11.51	(1.07)
44	3-1 11/32	(948)	6.67	(0.62)	7.71	(0.72)	9.78	(0.91)	11.85	(1.10)	12.89	(1.20)
48	3-5 11/32	(1050)	7.38	(0.69)	8.53	(0.79)	10.83	(1.01)	13.12	(1.22)	14.27	(1.33)
54	3-11 11/32	(1202)	8.46	(0.79)	9.77	(0.91)	12.40	(1.15)	15.03	(1.40)	16.35	(1.52)
56	4-1 11/32	(1253)	8.81	(0.82)	10.18	(0.95)	12.92	(1.20)	15.67	(1.46)	17.04	(1.58)
60	4-5 11/32	(1355)	9.53	(0.89)	11.01	(1.02)	13.97	(1.30)	16.94	(1.57)	18.42	(1.71)
64	4-9 11/32	(1456)	10.24	(0.95)	11.84	(1.10)	15.02	(1.40)	18.21	(1.69)	19.80	(1.84)
72	5-5 11/32	(1659)	11.67	(1.08)	13.49	(1.25)	17.12	(1.59)	20.75	(1.93)	22.56	(2.10)
			Tall Bottom Rail									
32	1-11 27/32	(605)	4.26	(0.40)	4.92	(0.46)	6.24	(0.58)	7.57	(0.70)	8.23	(0.76)
36	2-3 27/32	(707)	4.97	(0.46)	5.75	(0.53)	7.29	(0.68)	8.84	(0.82)	9.61	(0.89)
40	2-7 27/32	(809)	5.69	(0.53)	6.57	(0.61)	8.34	(0.77)	10.11	(0.94)	10.99	(1.02)
44	2-11 27/32	(910)	6.40	(0.59)	7.40	(0.69)	9.39	(0.87)	11.38	(1.06)	12.37	(1.15)
48	3-3 27/32	(1012)	7.12	(0.66)	8.22	(0.76)	10.44	(0.97)	12.65	(1.18)	13.76	(1.28)
54	3-9 27/32	(1164)	8.19	(0.76)	9.46	(0.88)	12.01	(1.12)	14.55	(1.35)	15.83	(1.47)
56	3-11 27/32	(1215)	8.55	(0.79)	9.87	(0.92)	12.53	(1.16)	15.19	(1.41)	16.52	(1.53)
60	4-3 27/32	(1317)	9.26	(0.86)	10.70	(0.99)	13.58	(1.26)	16.46	(1.53)	17.90	(1.66)
64	4-7 27/32	(1418)	9.97	(0.93)	11.53	(1.07)	14.63	(1.36)	17.73	(1.65)	19.28	(1.79)
72	5-3 27/32	(1621)	11.40	(1.06)	13.18	(1.22)	16.72	(1.55)	20.27	(1.88)	22.04	(2.05)

Minimum and Maximum Guidelines, Certified Sizes and Rating

Minimum and Maximum Guidelines - Operable Casement										
Unit Type	Frame Size									
	Min Size Unit					Max Size Unit				
	in	mm	×	in	mm	in	mm	×	in	mm
WUPFCA	36	(914)	×	21	(533)	60	(1524)	×	72 1/16	(1830)

Certified Sizes and Ratings						
Unit Type	Frame Height		Frame Width			
			in	mm	in	mm
	in	mm	56	(1422)	60	(1524)
WUPFCA	60 1/16	1526	LC-PG50-C		Not rated	
	72 1/16	1830	LC-PG40-C		LC-PG40-C	

Conversion Tables

Unit Measurements				Width		Height	
From	**To**						
Rough Opening				**in**	**mm**	**in**	**mm**
OM of Frame	Rough Opening			+ 1	(25)	+ 1/2	(13)
Masonry Opening w/BMC	Rough Opening			-2 5/8	(67)	-1 5/16	(33)
Sash				**in**	**mm**	**in**	**mm**
OM of Frame	OM of Sash	÷	2	-1 15/16	(49)	-2 9/16	(65)
Daylight Opening (Std Btm Rail)	OM of Sash			+ 4 1/8	(104)	+ 4 1/8	(104)
Daylight Opening (Tall Btm Rail)	OM of Sash			+ 4 1/8	(104)	+ 5 19/32	(142)
Glass				**in**	**mm**	**in**	**mm**
Daylight Opening	Glass			+ 1 3/32	(28)	+ 1 3/32	(28)
Screen				**in**	**mm**	**in**	**mm**
OM of Frame	OM of Screen			-4 9/32	(109)	-5 25/32	(147)
Daylight Opening (Std Btm Rail)	OM of Screen			+ 6 1/32	(153)	+ 29/32	(23)
Daylight Opening (Tall Btm Rail)	OM of Screen			+ 6 1/32	(153)	+ 2 13/32	(61)

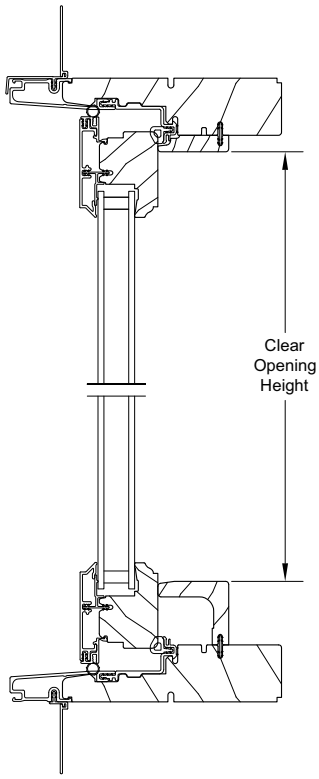

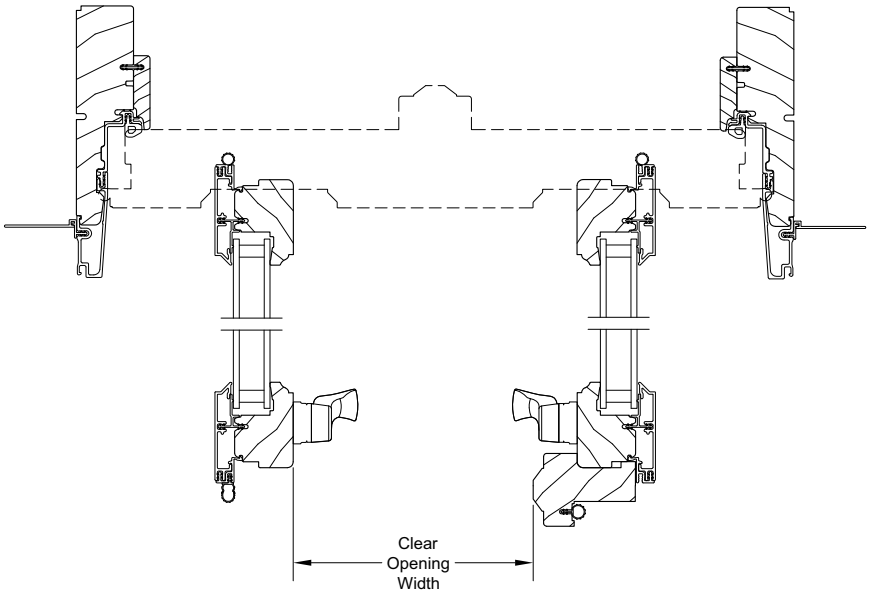

Standard Unit Measurements

Standard Ultimate Push Out French Casement Unit Measurements								
Width								
CN	Masonry Opening		Rough Opening		Frame Size		Daylight Opening	
	ft - in	mm	ft - in	mm	ft - in	mm	ft - in	mm
36	3-0 1/2	(927)	3-1	(940)	3-0	(914)	2-1 23/32	(653)
40	3-4 1/2	(1029)	3-5	(1041)	3-4	(1016)	2-5 23/32	(755)
48	4-0 1/2	(1232)	4-1	(1245)	4-0	(1219)	3-1 23/32	(958)
56	4-8 1/2	(1435)	4-9	(1448)	4-8	(1422)	3-9 23/32	(1161)
60	5-0 1/2	(1537)	5-1	(1549)	5-0	(1524)	4-1 23/32	(1263)

Standard Ultimate Push Out French Casement Unit Measurements										
Height										
CN	Masonry Opening		Rough Opening		Frame Size (w/subsill)		Daylight Opening (Std Bottom Rail)		Daylight Opening (Tall Bottom Rail)	
	ft - in	mm	ft - in	mm	ft - in	mm	ft - in	mm	ft - in	mm
32	2-8 5/16	(821)	2-8 9/16	(827)	2-8 1/16	(814)	2-1 11/32	(643)	1-11 27/32	(605)
36	3-0 5/16	(922)	3-0 9/16	(929)	3-0 1/16	(916)	2-5 11/32	(745)	2-3 27/32	(707)
40	3-4 5/16	(1024)	3-4 9/16	(1030)	3-4 1/16	(1018)	2-9 11/32	(847)	2-7 27/32	(809)
44	3-8 5/16	(1126)	3-8 9/16	(1132)	3-8 1/16	(1119)	3-1 11/32	(948)	2-11 27/32	(910)
48	4-0 5/16	(1227)	4-0 9/16	(1233)	4-0 1/16	(1221)	3-5 11/32	(1050)	3-3 27/32	(1012)
54	4-6 5/16	(1380)	4-6 9/16	(1386)	4-6 1/16	(1373)	3-11 11/32	(1202)	3-9 27/32	(1164)
56	4-8 5/16	(1430)	4-8 9/16	(1437)	4-8 1/16	(1424)	4-1 11/32	(1253)	3-11 27/32	(1215)
60	5-0 5/16	(1532)	5-0 9/16	(1538)	5-0 1/16	(1526)	4-5 11/32	(1355)	4-3 27/32	(1317)
64	5-4 5/16	(1634)	5-4 9/16	(1640)	5-4 1/16	(1627)	4-9 11/32	(1456)	4-7 27/32	(1418)
72	6-0 5/16	(1837)	6-0 9/16	(1843)	6-0 1/16	(1830)	5-5 11/32	(1659)	5-3 27/32	(1621)

Section Details: 3/4" IG Operator

Scale: 3" = 1' 0"

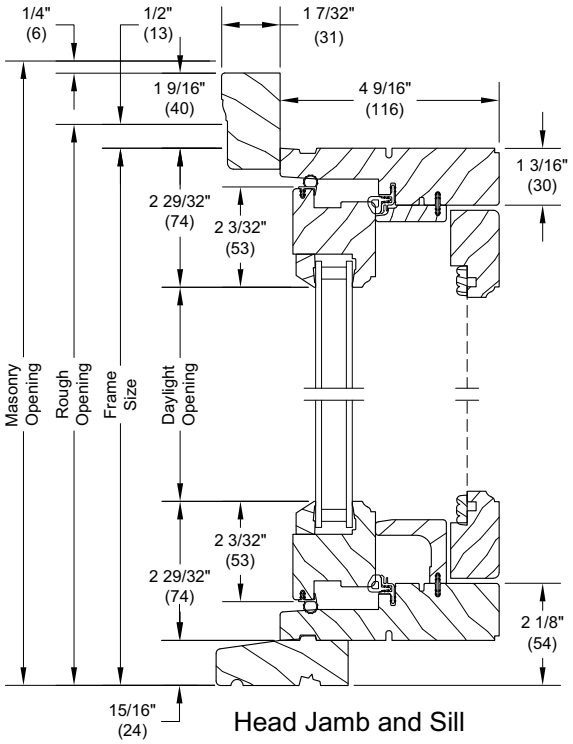

Head Jamb and Sill

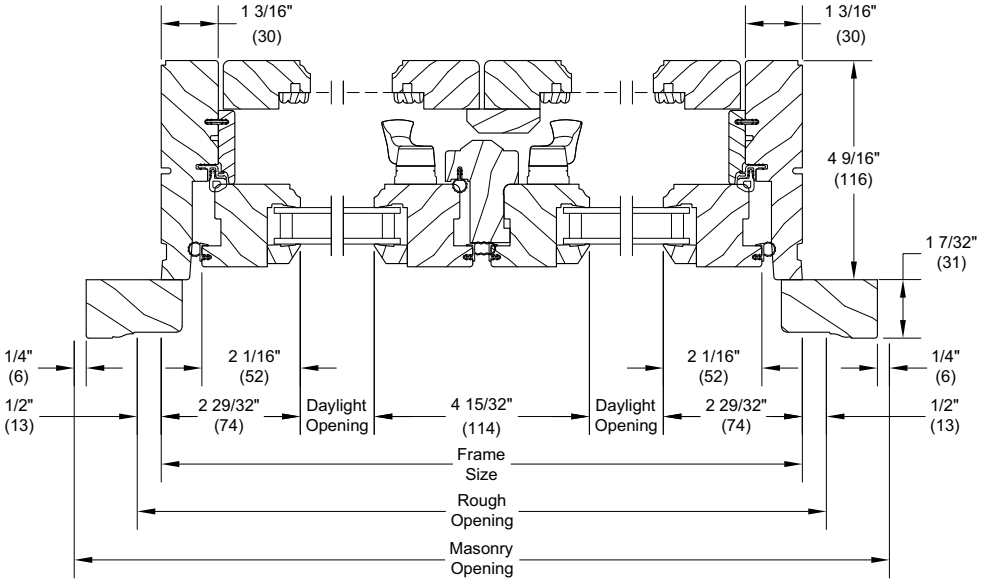

Jambs

Section Details: 3/4" IG Stationary

Scale: 3" = 1' 0"

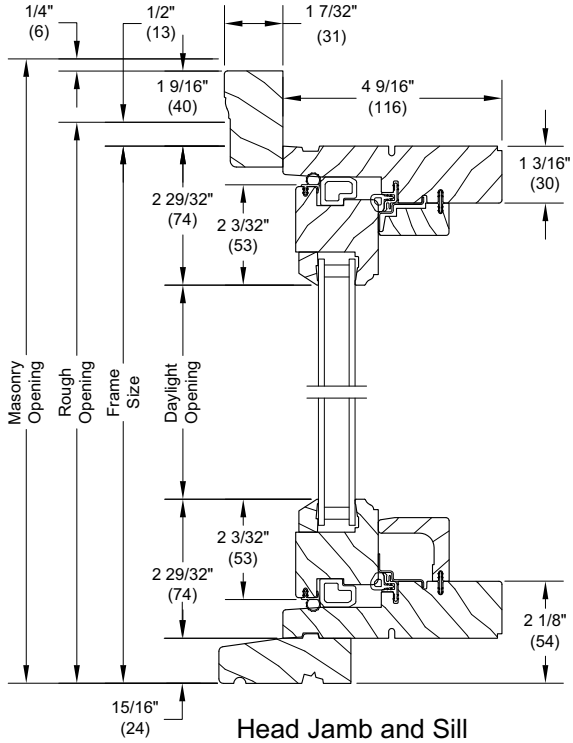

Head Jamb and Sill

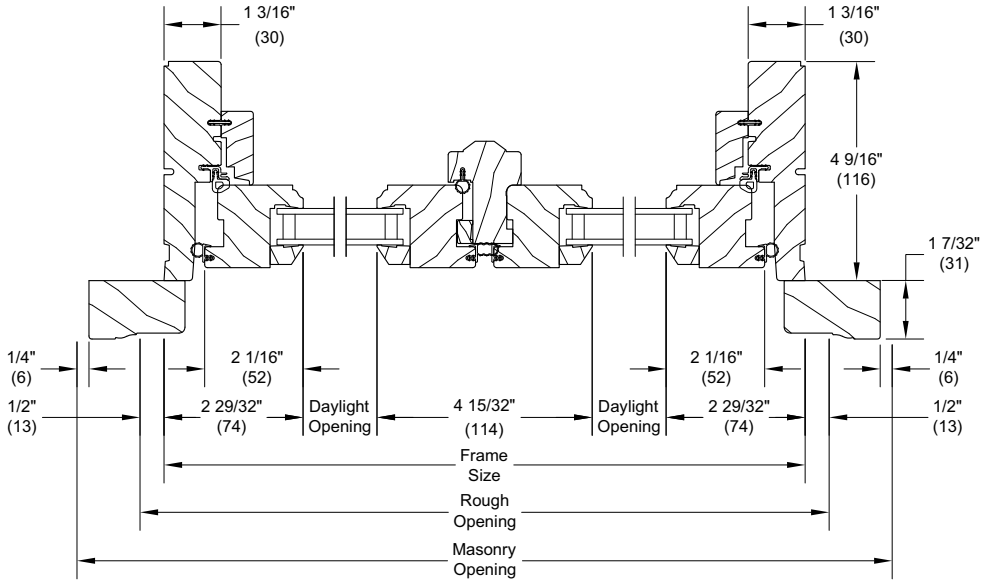

Jambs

Section Details: 1" IG Operator

Scale: 3" = 1' 0"

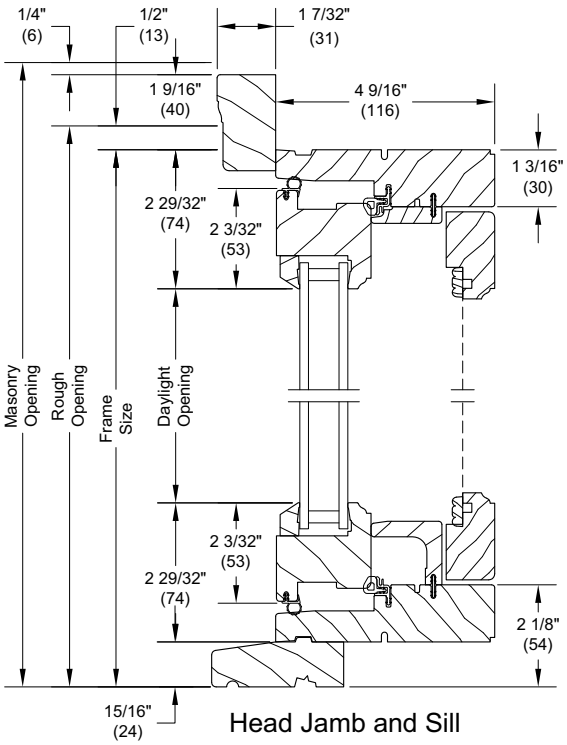

Head Jamb and Sill

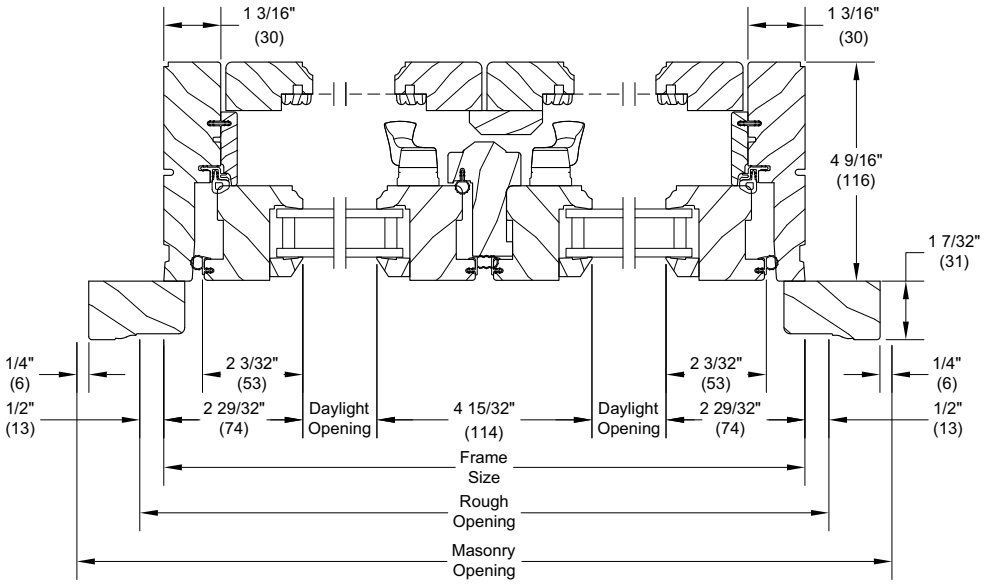

Jambs

Section Details: 1" IG Stationary

Scale: 3" = 1' 0"

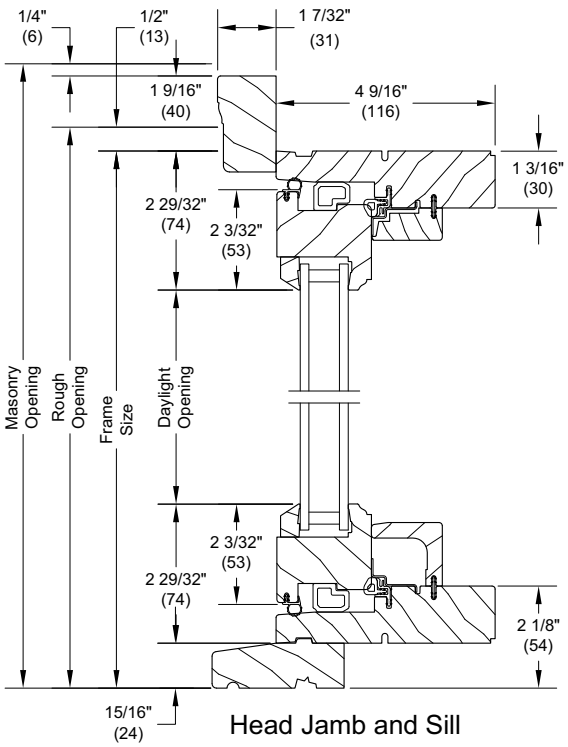

Head Jamb and Sill

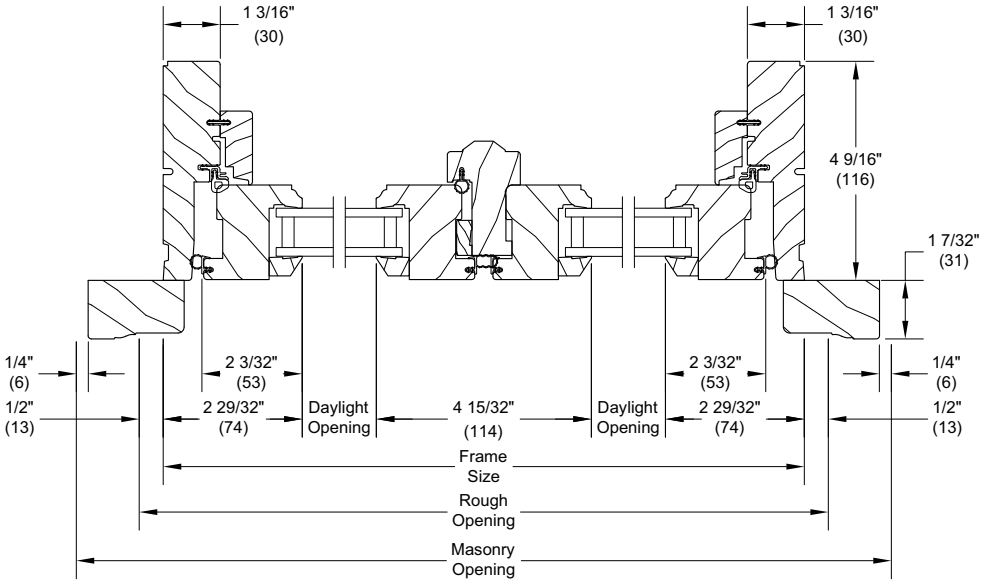

Jambs

Section Details: 3/4" IG and 1" IG Operator/Stationary Wide Bottom Rail Option

Scale: 3" = 1' 0"

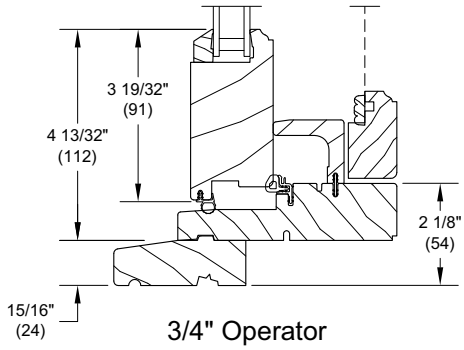

3/4" Operator

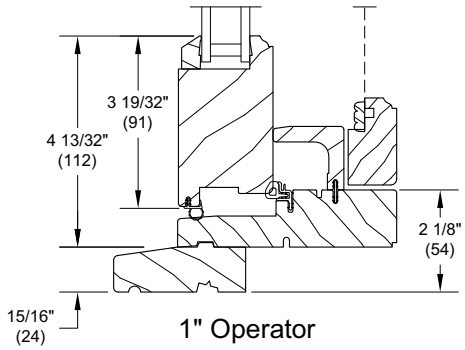

1" Operator

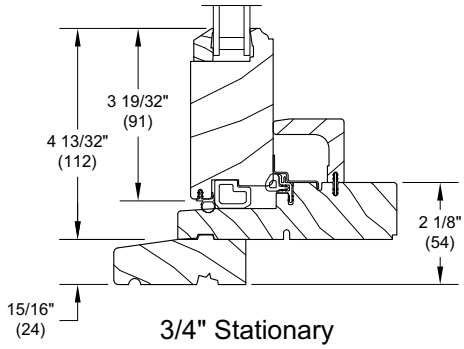

3/4" Stationary

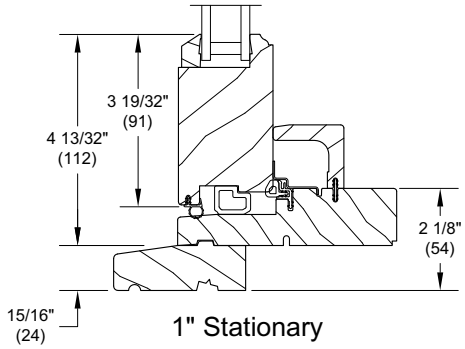

1" Stationary