Wood Ultimate Glider

Unit Features 1
Standard Divided Lite Options 2
Optional Interior Square Simulated Divided Lite 3
Egress and Vent Openings: XO/OX Configurations 4
Daylight Opening: XO/OX Configuration 5
Egress and Vent Openings: XOX - Configuration 6
Daylight Measurements: XOX Configuration 7
Daylight Measurements: Picture Unit 8
Minimum and Maximum Guidelines 9
Certified Sizes and Rating: XO/OX and XOX 10
Certified Sizes and Ratings: Picture 11
Measurement Conversions: Picture and XO/OX Units 12
Measurement Conversions: XOX Units 13
Standard Unit Measurements: XO/OX and XOX 15
Section Details: XO/OX and Triple Sash 17
Section Details: Picture/Combination 18
Mullions 19

Unit Features

Wood Ultimate Glider: WUGL

Wood Ultimate Glider Triple Sash: WUGLTS

Wood Ultimate Glider Picture: WUGLP

Frame:

- Frame base with pre-drilled installation holes in jambs. Factory applied 2" (551) BMC and 15/16” (24) subsill is standard.
- Exterior frame thickness: Nominally at Head Jamb 15/16” (24), Side Jamb Operator 1 3/4” (44) Side Jamb Stationary 1 11/32” (34).
- Exterior and interior: Standard is treated Pine Bare Wood. Optional species available are Mahogany or Vertical Grain Douglas Fir.
- Available configurations: WUGL (XO/OX, O) and WUGLTS (XOX).

Sash:

- Sash thickness: Nominally 1 5/8” (41).
- Rails and jamb stiles 1 3/4” (44), primary meeting stile 1 3/6” (30) secondary meeting stile 2" (51).
- Standard rail is 1 3/4” (44). The optional tall bottom rail is 2 5/8” (67)
- Standard sticking profile to interior is Ogee and simulated putty glaze to exterior. Optional interior Square sticking.
- Exterior and Interior: Standard is treated Pine Bare Wood. Optional species available are Mahogany and Vertical Grain Douglas Fir.
- XO and OX configurations contain a stationary sash and an operating sash that moves horizontally.
- XOX configuration contains an operator sash to each side of a stationary center sash.
- O configuration contains a single inoperable sash.
- Different sash option allows unequal sash widths, unique lite cuts for each sash or different glazing in each sash.
- Operating sash is removable for cleaning.

Hardware:

- The glider uses a single handle actuation multi-point lock system and sash retainer bar for tilting or removing the operating sash to the interior.
- One die cast zinc handle activates one or two latches, depending on the unit height, into one or two keepers on the secondary sash. The bottom of the lock handle is inset approximately 5" (127) from bottom of the sill into the meeting stile of the primary sash and is used to feature a secondary handle, field applied on the secondary sash to assist in operation.
- Latch has an indicator tab that extends when the sash is in a closed position and lock is not locked.
- The standard color of the handle is Satin Taupe. Optional finishes are: White, Bronze, Brass, Antique Brass, Polished Chrome, Satin Chrome, Oil Rubbed Bronze and Satin Nickel.

Weather Strip:

- Exterior frame weather strip is bulb type. The standard color is Beige with White and Black available at customer request.
- Interior weather strip is Beige by default, customer can request White.

Insect Screens:

- The standard screen is roll form aluminum and fits over the operating sash only for XO and OX operating units.
- XOX will have screens that cover the active sash opening, no full unit screen configuration in available.
- Stone White finish is standard.
- The standard screen mesh is Charcoal Fiberglass. Optional mesh: High Transparency, Charcoal Aluminum. Black Aluminum, Bright Aluminum, Bright Bronze Aluminum or Silver Gray Fiberglass.

Wood Combination Storm Sash and Screen:

- Frame: White primed is standard; bare is optional.
- Storm Panel: Double strength glass in an extruded surround. Surround color: Stone White, Pebble Gray, Bronze, Bahama Brown, Evergreen or Arctic white.
- Insect Screen mesh: Charcoal Fiberglass.Weather Strip: Pile weather strip between operating panels and at stiles of main frame. Dual seal weather strip at center rail.
- Hardware: Spring loaded latches to secure storm panel. Metal pulls on sliding storm panels.

Glass:

- Glazing seal: Silicone glazed.
- Standard glass is insulating LoĒ²272® with Argon or Air.
- Optional glazing available: LoĒ180™ with Argon or Air, LoĒ 366® with Argon or Air, clear, tints, tempered, obscure and others.
- Insulating glass will be altitude adjusted with capillary tubes for higher elevations. Argon gas is not available for elevations that require capillary tubes.

Standard Divided Lite Options

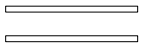

Insulating Glass

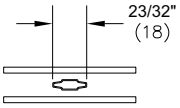

Aluminum 11/16"
Contour GBG

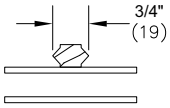

3/4" Grille

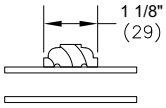

1 1/8" Grille

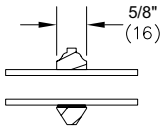

5/8" SDL

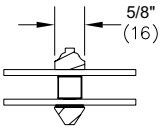

5/8" SDL
W/Spacer

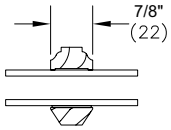

7/8" SDL

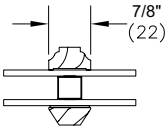

7/8" SDL
W/Spacer Bar

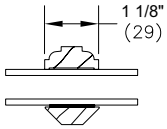

1 1/8" SDL

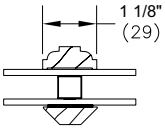

1 1/8" SDL
W/Spacer Bar

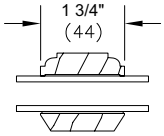

1 3/4" SDL

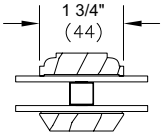

1 3/4" SDL
W/One Spacer Bar

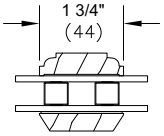

1 3/4" SDL
W/Two Spacer Bars

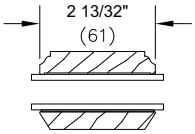

2 13/32" SDL

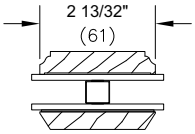

2 13/32" SDL
W/One Spacer Bar

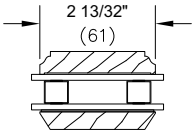

2 13/32" SDL
W/Two Spacer Bar

Optional Interior Square Simulated Divided Lite

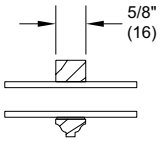

5/8" SDL

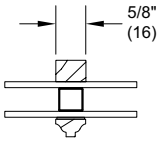

5/8" SDL
W/Spacer

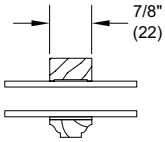

7/8" SDL

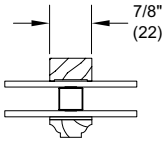

7/8" SDL
W/Spacer Bar

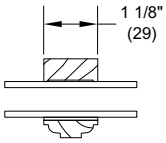

1 1/8" SDL

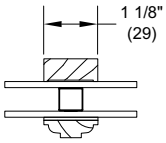

1 1/8" SDL
W/Spacer Bar

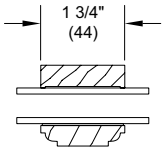

1 3/4" SDL

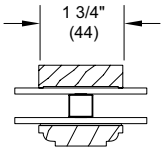

1 3/4" SDL
W/One Spacer Bar

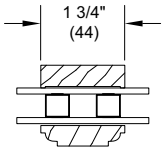

1 3/4" SDL
W/Two Spacer Bars

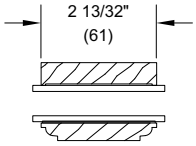

2 13/32" SDL

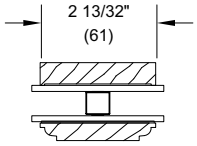

2 13/32" SDL
W/One Spacer Bar

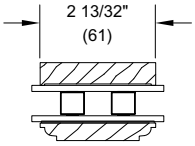

2 13/32" SDL
W/Two Spacer Bar

Egress and Vent Openings: XO/OX Configurations

CN	Clear Opening Width		Clear Opening Height		Egress /Vent Opening	
	ft - in	mm	ft - in	mm	ft^2	m^2
3020	1-2 1/16	(357)	1-6 15/16	(481)	1.85	(0.17)
3026	1-2 1/16	(357)	2-0 15/16	(633)	2.43	(0.23)
3030	1-2 1/16	(357)	2-6 15/16	(786)	3.02	(0.28)
3036	1-2 1/16	(357)	3-0 15/16	(938)	3.61	(0.34)
3040	1-2 1/16	(357)	3-6 15/16	(1090)	4.19	(0.39)
3046	1-2 1/16	(357)	4-0 15/16	(1243)	4.78	(0.44)
3050	1-2 1/16	(357)	4-6 15/16	(1395)	5.37	(0.50)
3056	1-2 1/16	(357)	5-0 15/16	(1548)	5.95	(0.55)
3060	1-2 1/16	(357)	5-6 15/16	(1700)	6.54	(0.61)
3620	1-5 1/16	(433)	1-6 15/16	(481)	2.24	(0.21)
3626	1-5 1/16	(433)	2-0 15/16	(633)	2.95	(0.27)
3630	1-5 1/16	(433)	2-6 15/16	(786)	3.67	(0.34)
3636	1-5 1/16	(433)	3-0 15/16	(938)	4.38	(0.41)
3640	1-5 1/16	(433)	3-6 15/16	(1090)	5.09	(0.47)
3646	1-5 1/16	(433)	4-0 15/16	(1243)	5.80	(0.54)
3650	1-5 1/16	(433)	4-6 15/16	(1395)	6.51	(0.60)
3656	1-5 1/16	(433)	5-0 15/16	(1548)	7.22	(0.67)
3660	1-5 1/16	(433)	5-6 15/16	(1700)	7.93	(0.74)
4020	1-8 1/16	(510)	1-6 15/16	(481)	2.64	(0.25)
4026	1-8 1/16	(510)	2-0 15/16	(633)	3.47	(0.32)
4030	1-8 1/16	(510)	2-6 15/16	(786)	4.31	(0.40)
4036	1-8 1/16	(510)	3-0 15/16	(938)	5.15	(0.48)
4040 E	1-8 1/16	(510)	3-6 15/16	(1090)	5.98	(0.56)
4046 E	1-8 1/16	(510)	4-0 15/16	(1243)	6.82	(0.63)
4050 E	1-8 1/16	(510)	4-6 15/16	(1395)	7.65	(0.71)
4056 E	1-8 1/16	(510)	5-0 15/16	(1548)	8.49	(0.79)
4060 E	1-8 1/16	(510)	5-6 15/16	(1700)	9.33	(0.87)
4620	1-11 1/16	(586)	1-6 15/16	(481)	3.03	(0.28)
4626	1-11 1/16	(586)	2-0 15/16	(633)	3.99	(0.37)
4630	1-11 1/16	(586)	2-6 15/16	(786)	4.95	(0.46)
4636 E	1-11 1/16	(586)	3-0 15/16	(938)	5.91	(0.55)
4640 E	1-11 1/16	(586)	3-6 15/16	(1090)	6.88	(0.64)
4646 E	1-11 1/16	(586)	4-0 15/16	(1243)	7.84	(0.73)
4650 E	1-11 1/16	(586)	4-6 15/16	(1395)	8.80	(0.82)
4656 E	1-11 1/16	(586)	5-0 15/16	(1548)	9.76	(0.91)
4660 E	1-11 1/16	(586)	5-6 15/16	(1700)	10.72	(1.00)

CN	Clear Opening Width		Clear Opening Height		Egress/Vent Opening	
	ft - in	mm	ft - in	mm	ft^2	m^2
5020	2-2 1/16	(662)	1-6 15/16	(481)	3.43	(0.32)
5026	2-2 1/16	(662)	2-0 15/16	(633)	4.51	(0.42)
5030	2-2 1/16	(662)	2-6 15/16	(786)	5.60	(0.52)
5036 E	2-2 1/16	(662)	3-0 15/16	(938)	6.68	(0.62)
5040 E	2-2 1/16	(662)	3-6 15/16	(1090)	7.77	(0.72)
5046 E	2-2 1/16	(662)	4-0 15/16	(1243)	8.86	(0.82)
5050 E	2-2 1/16	(662)	4-6 15/16	(1395)	9.94	(0.92)
5056 E	2-2 1/16	(662)	5-0 15/16	(1548)	11.03	(1.02)
5060 E	2-2 1/16	(662)	5-6 15/16	(1700)	12.11	(1.13)
5620	2-5 1/16	(738)	1-6 15/16	(481)	3.82	(0.35)
5626	2-5 1/16	(738)	2-0 15/16	(633)	5.03	(0.47)
5630 E	2-5 1/16	(738)	2-6 15/16	(786)	6.24	(0.58)
5636 E	2-5 1/16	(738)	3-0 15/16	(938)	7.45	(0.69)
5640 E	2-5 1/16	(738)	3-6 15/16	(1090)	8.66	(0.80)
5646 E	2-5 1/16	(738)	4-0 15/16	(1243)	9.88	(0.92)
5650 E	2-5 1/16	(738)	4-6 15/16	(1395)	11.09	(1.03)
5656 E	2-5 1/16	(738)	5-0 15/16	(1548)	12.30	(1.14)
5660 E	2-5 1/16	(738)	5-6 15/16	(1700)	13.51	(1.25)
6020	2-8 1/16	(586)	1-6 15/16	(481)	4.21	(0.39)
6026	2-8 1/16	(586)	2-0 15/16	(633)	5.55	(0.52)
6030 E	2-8 1/16	(586)	2-6 15/16	(786)	6.89	(0.64)
6036 E	2-8 1/16	(586)	3-0 15/16	(938)	8.22	(0.76)
6040 E	2-8 1/16	(586)	3-6 15/16	(1090)	9.56	(0.89)
6046 E	2-8 1/16	(586)	4-0 15/16	(1243)	10.90	(1.01)
6050 E	2-8 1/16	(586)	4-6 15/16	(1395)	12.23	(1.14)
6056 E	2-8 1/16	(586)	5-0 15/16	(1548)	13.57	(1.26)
6060 E	2-8 1/16	(586)	5-6 15/16	(1700)	14.90	(1.38)

NOTE: E= Window that meets the requirements for Egress. Please note that top of the sill must be no more than 44" (1118) *from the floor.*

NOTE: Refer to Product Performance Chapter for International Building Code. Net Clear Opening drawings are pictured with the conversion tables.

Daylight Opening: XO/OX Configuration

Wood Ultimate Glider Daylight Measurements OX, XO			Width					
			CN	30		36		40	
			DLO	2-2 9/16	(674)	2-8 9/16	(827)	3-2 9/16	(979)
CN	DLO Height		Square Feet (Square Meters)						
			Standard Bottom Rail						
20	1-4 11/16	(425)		3.08	(0.29)	3.78	(0.35)	4.47	(0.42)
26	1-10 11/16	(577)		4.19	(0.39)	5.13	(0.48)	6.08	(0.56)
30	2-4 11/16	(729)		5.29	(0.49)	6.49	(0.60)	7.69	(0.71)
36	2-10 11/16	(882)		6.40	(0.59)	7.85	(0.73)	9.29	(0.86)
40	3-4 11/16	(1034)		7.51	(0.70)	9.20	(0.85)	10.90	(1.01)
46	3-10 11/16	(1187)		8.61	(0.80)	10.56	(0.98)	12.51	(1.16)
50	4-4 11/16	(1339)		9.72	(0.90)	11.91	(1.11)	14.11	(1.31)
56	4-10 11/16	(1491)		10.82	(1.01)	13.27	(1.23)	15.72	(1.46)
60	5-4 11/16	(1644)		11.93	(1.11)	14.63	(1.36)	17.32	(1.61)
			Tall Bottom Rail						
20	1-3 13/16	(402)		2.92	(0.27)	4.24	(0.39)	4.90	(0.45)
26	1-9 13/16	(554)		4.02	(0.37)	5.84	(0.54)	6.75	(0.63)
30	2-3 13/16	(707)		5.13	(0.48)	7.45	(0.69)	8.61	(0.80)
36	2-9 13/16	(859)		6.24	(0.58)	9.05	(0.84)	10.46	(0.97)
40	3-3 13/16	(1012)		7.34	(0.68)	10.66	(0.99)	12.32	(1.14)
46	3-9 13/16	(1164)		8.45	(0.78)	12.27	(1.14)	14.18	(1.32)
50	4-3 13/16	(1316)		9.55	(0.89)	13.87	(1.29)	16.03	(1.49)
56	4-9 13/16	(1469)		10.66	(0.99)	15.48	(1.44)	17.89	(1.66)
60	5-3 13/16	(1621)		11.77	(1.09)	17.09	(1.59)	19.74	(1.83)

Wood Ultimate Glider Daylight Measurements OX, XO			Width							
			CN	46		50		56		60	
			DLO	3-8 9/16	(1132)	4-2 9/16	(1284)	4-8 9/16	(1436)	5-2 9/16	(1589)
CN	DLO Height		Square Feet (Square Meters)								
			Standard Bottom Rail								
20	1-4 11/16	(425)		5.17	(0.48)	5.87	(0.55)	6.56	(0.61)	7.26	(0.67)
26	1-10 11/16	(577)		7.03	(0.65)	7.97	(0.74)	8.92	(0.83)	9.87	(0.92)
30	2-4 11/16	(729)		8.88	(0.83)	10.08	(0.94)	11.28	(1.05)	12.47	(1.16)
36	2-10 11/16	(882)		10.74	(1.00)	12.19	(1.13)	13.63	(1.27)	15.08	(1.40)
40	3-4 11/16	(1034)		12.60	(1.17)	14.29	(1.33)	15.99	(1.49)	17.68	(1.64)
46	3-10 11/16	(1187)		14.45	(1.34)	16.40	(1.52)	18.34	(1.70)	20.29	(1.89)
50	4-4 11/16	(1339)		16.31	(1.52)	18.50	(1.72)	20.70	(1.92)	22.90	(2.13)
56	4-10 11/16	(1491)		18.16	(1.69)	20.61	(1.91)	23.06	(2.14)	25.50	(2.37)
60	5-4 11/16	(1644)		20.02	(1.86)	22.72	(2.11)	25.41	(2.36)	28.11	(2.61)
			Wide Bottom Rail								
20	1-3 13/16	(402)		4.90	(0.45)	5.55	(0.52)	6.21	(0.58)	6.87	(0.64)
26	1-9 13/16	(554)		6.75	(0.63)	7.66	(0.71)	8.57	(0.80)	9.48	(0.88)
30	2-3 13/16	(707)		8.61	(0.80)	9.77	(0.91)	10.93	(1.02)	12.09	(1.12)
36	2-9 13/16	(859)		10.46	(0.97)	11.87	(1.10)	13.28	(1.23)	14.69	(1.36)
40	3-3 13/16	(1012)		12.32	(1.14)	13.98	(1.30)	15.64	(1.45)	17.30	(1.61)
46	3-9 13/16	(1164)		14.18	(1.32)	16.09	(1.49)	18.00	(1.67)	19.90	(1.85)
50	4-3 13/16	(1316)		16.03	(1.49)	18.19	(1.69)	20.35	(1.89)	22.51	(2.09)
56	4-9 13/16	(1469)		17.89	(1.66)	20.30	(1.89)	22.71	(2.11)	25.12	(2.33)
60	5-3 13/16	(1621)		19.74	(1.83)	22.40	(2.08)	25.06	(2.33)	27.72	(2.58)

Egress and Vent Openings: XOX - Configuration

CN	Clear Opening Width		Clear Opening Height		Egress Opening	
	ft - in	mm	ft - in	mm	ft^2	m^2
6020	1-2 3/4	(374)	1-6 15/16	(481)	1.94	(0.18)
6026	1-2 3/4	(374)	2-0 15/16	(633)	2.55	(0.24)
6030	1-2 3/4	(374)	2-6 15/16	(786)	3.16	(0.29)
6036	1-2 3/4	(374)	3-0 15/16	(938)	3.78	(0.35)
6040	1-2 3/4	(374)	3-6 15/16	(1090)	4.39	(0.41)
6046	1-2 3/4	(374)	4-0 15/16	(1243)	5.01	(0.47)
6050	1-2 3/4	(374)	4-6 15/16	(1395)	5.62	(0.52)
6056	1-2 3/4	(374)	5-0 15/16	(1548)	6.23	(0.58)
6060	1-2 3/4	(374)	5-6 15/16	(1700)	6.85	(0.64)
8020	1-8 3/4	(527)	1-6 15/16	(481)	2.73	(0.25)
8026	1-8 3/4	(527)	2-0 15/16	(633)	3.59	(0.33)
8030	1-8 3/4	(527)	2-6 15/16	(786)	4.45	(0.41)
8036	1-8 3/4	(527)	3-0 15/16	(938)	5.32	(0.49)
8040 E	1-8 3/4	(527)	3-6 15/16	(1090)	6.18	(0.57)
8046 E	1-8 3/4	(527)	4-0 15/16	(1243)	7.05	(0.65)
8050 E	1-8 3/4	(527)	4-6 15/16	(1395)	7.91	(0.73)
8056 E	1-8 3/4	(527)	5-0 15/16	(1548)	8.77	(0.81)
8060 E	1-8 3/4	(527)	5-6 15/16	(1700)	9.64	(0.90)
10020	2-2 3/4	(679)	1-6 15/16	(481)	3.51	(0.33)
10026	2-2 3/4	(679)	2-0 15/16	(633)	4.63	(0.43)
10030 E	2-2 3/4	(679)	2-6 15/16	(786)	5.74	(0.53)
10036 E	2-2 3/4	(679)	3-0 15/16	(938)	6.86	(0.64)
10040 E	2-2 3/4	(679)	3-6 15/16	(1090)	7.97	(0.74)
10046 E	2-2 3/4	(679)	4-0 15/16	(1243)	9.08	(0.84)
10050 E	2-2 3/4	(679)	4-6 15/16	(1395)	10.20	(0.95)
10056 E	2-2 3/4	(679)	5-0 15/16	(1548)	11.31	(1.05)
10060 E	2-2 3/4	(679)	5-6 15/16	(1700)	12.43	(1.15)

CN	Opening Vent Width		Opening Vent Height		Vent Opening	
	ft - in	mm	ft - in	mm	ft^2	m^2
6020	2-5 1/2	(748)	1-6 15/16	(481)	3.87	(0.36)
6026	2-5 1/2	(748)	2-0 15/16	(633)	5.10	(0.47)
6030	2-5 1/2	(748)	2-6 15/16	(786)	6.33	(0.59)
6036	2-5 1/2	(748)	3-0 15/16	(938)	7.56	(0.70)
6040	2-5 1/2	(748)	3-6 15/16	(1090)	8.78	(0.82)
6046	2-5 1/2	(748)	4-0 15/16	(1243)	10.01	(0.93)
6050	2-5 1/2	(748)	4-6 15/16	(1395)	11.24	(1.04)
6056	2-5 1/2	(748)	5-0 15/16	(1548)	12.47	(1.16)
6060	2-5 1/2	(748)	5-6 15/16	(1700)	13.70	(1.27)
8020	3-5 1/2	(1053)	1-6 15/16	(481)	5.45	(0.51)
8026	3-5 1/2	(1053)	2-0 15/16	(633)	7.18	(0.67)
8030	3-5 1/2	(1053)	2-6 15/16	(786)	8.91	(0.83)
8036	3-5 1/2	(1053)	3-0 15/16	(938)	10.63	(0.99)
8040	3-5 1/2	(1053)	3-6 15/16	(1090)	12.36	(1.15)
8046	3-5 1/2	(1053)	4-0 15/16	(1243)	14.09	(1.31)
8050	3-5 1/2	(1053)	4-6 15/16	(1395)	15.82	(1.47)
8056	3-5 1/2	(1053)	5-0 15/16	(1548)	17.55	(1.63)
8060	3-5 1/2	(1053)	5-6 15/16	(1700)	19.27	(1.79)
10020	4-5 1/2	(1358)	1-6 15/16	(481)	7.03	(0.65)
10026	4-5 1/2	(1358)	2-0 15/16	(633)	9.26	(0.86)
10030	4-5 1/2	(1358)	2-6 15/16	(786)	11.48	(1.07)
10036	4-5 1/2	(1358)	3-0 15/16	(938)	13.71	(1.27)
10040	4-5 1/2	(1358)	3-6 15/16	(1090)	15.94	(1.48)
10046	4-5 1/2	(1358)	4-0 15/16	(1243)	18.17	(1.69)
10050	4-5 1/2	(1358)	4-6 15/16	(1395)	20.40	(1.89)
10056	4-5 1/2	(1358)	5-0 15/16	(1548)	22.62	(2.10)
10060	4-5 1/2	(1358)	5-6 15/16	(1700)	24.85	(2.31)

Daylight Measurements: XOX Configuration

Wood Ultimate Glider Daylight Measurements XOX			Width					
		CN	60		80		100	
		DLO	5-0 1/8	(1527)	7-0 1/8	(2137)	9-0 1/8	(2746)
CN	DLO Height		Square Feet (Square Meters)					
			Standard Bottom Rail					
20	1-4 11/16	(425)	6.98	(0.65)	9.76	(0.91)	12.55	(1.17)
26	1-10 11/16	(577)	9.48	(0.88)	13.27	(1.23)	17.05	(1.58)
30	2-4 11/16	(729)	11.99	(1.11)	16.77	(1.56)	21.56	(2.00)
36	2-10 11/16	(882)	14.49	(1.35)	20.28	(1.88)	26.06	(2.42)
40	3-4 11/16	(1034)	17.00	(1.58)	23.78	(2.21)	30.57	(2.84)
46	3-10 11/16	(1187)	19.50	(1.81)	27.29	(2.54)	35.07	(3.26)
50	4-4 11/16	(1339)	22.01	(2.04)	30.79	(2.86)	39.58	(3.68)
56	4-10 11/16	(1491)	24.51	(2.28)	34.30	(3.19)	44.08	(4.10)
60	5-4 11/16	(1644)	27.02	(2.51)	37.80	(3.51)	48.59	(4.51)
			Tall Bottom Rail					
20	1-3 13/16	(402)	6.61	(0.61)	9.24	(0.86)	11.88	(1.10)
26	1-9 13/16	(554)	9.11	(0.85)	12.75	(1.18)	16.39	(1.52)
30	2-3 13/16	(707)	11.62	(1.08)	16.25	(1.51)	20.89	(1.94)
36	2-9 13/16	(859)	14.12	(1.31)	19.76	(1.84)	25.40	(2.36)
40	3-3 13/16	(1012)	16.63	(1.54)	23.26	(2.16)	29.90	(2.78)
46	3-9 13/16	(1164)	19.13	(1.78)	26.77	(2.49)	34.41	(3.20)
50	4-3 13/16	(1316)	21.64	(2.01)	30.27	(2.81)	38.91	(3.61)
56	4-9 13/16	(1469)	24.14	(2.24)	33.78	(3.14)	43.42	(4.03)
60	5-3 13/16	(1621)	26.65	(2.48)	37.28	(3.46)	47.92	(4.45)

Daylight Measurements: Picture Unit

Wood Ultimate Glider Picture Daylight Measurements			Width							
		CN	30		36		40		46	
		DLO	2-5	(737)	2-11	(889)	3-5	(1041)	3-11	(1194)
CN	DLO Height		Square Feet (Square Meters)							
			Standard Bottom Rail							
20	1-4 11/16	(424)	3.36	(0.31)	4.06	(0.38)	4.76	(0.44)	5.45	(0.51)
26	1-10 11/16	(576)	4.57	(0.42)	5.52	(0.51)	6.46	(0.60)	7.41	(0.69)
30	2-4 11/16	(729)	5.78	(0.54)	6.97	(0.65)	8.17	(0.76)	9.37	(0.87)
36	2-10 11/16	(881)	6.99	(0.65)	8.43	(0.78)	9.88	(0.92)	11.33	(1.05)
40	3-4 11/16	(1033)	8.19	(0.76)	9.89	(0.92)	11.59	(1.08)	13.28	(1.23)
46	3-10 11/16	(1186)	9.40	(0.87)	11.35	(1.05)	13.29	(1.24)	15.24	(1.42)
50	4-4 11/16	(1338)	10.61	(0.99)	12.80	(1.19)	15.00	(1.39)	17.20	(1.60)
56	4-10 11/16	(1491)	11.82	(1.10)	14.26	(1.32)	16.71	(1.55)	19.15	(1.78)
60	5-4 11/16	(1643)	13.02	(1.21)	15.72	(1.46)	18.42	(1.71)	21.11	(1.96)
			Tall Bottom Rail							
20	1-3 13/16	(402)	3.18	(0.30)	3.84	(0.36)	4.50	(0.42)	5.16	(0.48)
26	1-9 13/16	(554)	4.39	(0.41)	5.30	(0.49)	6.21	(0.58)	7.12	(0.66)
30	2-3 13/16	(706)	5.60	(0.52)	6.76	(0.63)	7.92	(0.74)	9.08	(0.84)
36	2-9 13/16	(859)	6.81	(0.63)	8.22	(0.76)	9.63	(0.89)	11.03	(1.03)
40	3-3 13/16	(1011)	8.01	(0.74)	9.67	(0.90)	11.33	(1.05)	12.99	(1.21)
46	3-9 13/16	(1164)	9.22	(0.86)	11.13	(1.03)	13.04	(1.21)	14.95	(1.39)
50	4-3 13/16	(1316)	10.43	(0.97)	12.59	(1.17)	14.75	(1.37)	16.91	(1.57)
56	4-9 13/16	(1468)	11.64	(1.08)	14.05	(1.30)	16.46	(1.53)	18.86	(1.75)
60	5-3 13/16	(1621)	12.84	(1.19)	15.50	(1.44)	18.16	(1.69)	20.82	(1.93)

Wood Ultimate Glider Picture Daylight Measurements			Width					
		CN	50		56		60	
		DLO	4-5	(1346)	4-11	(1499)	5-5	(1651)
CN	DLO Height		Square Feet (Square Meters)					
			Standard Bottom Rail					
20	1-4 11/16	(424)	6.15	(0.57)	6.85	(0.64)	7.54	(0.70)
26	1-10 11/16	(576)	8.36	(0.78)	9.30	(0.86)	10.25	(0.95)
30	2-4 11/16	(729)	10.56	(0.98)	11.76	(1.09)	12.96	(1.20)
36	2-10 11/16	(881)	12.77	(1.19)	14.22	(1.32)	15.66	(1.46)
40	3-4 11/16	(1033)	14.98	(1.39)	16.68	(1.55)	18.37	(1.71)
46	3-10 11/16	(1186)	17.19	(1.60)	19.13	(1.78)	21.08	(1.96)
50	4-4 11/16	(1338)	19.39	(1.80)	21.59	(2.01)	23.79	(2.21)
56	4-10 11/16	(1491)	21.60	(2.01)	24.05	(2.23)	26.49	(2.46)
60	5-4 11/16	(1643)	23.81	(2.21)	26.51	(2.46)	29.20	(2.71)
			Tall Bottom Rail					
20	1-3 13/16	(402)	5.82	(0.54)	6.48	(0.60)	7.14	(0.66)
26	1-9 13/16	(554)	8.03	(0.75)	8.94	(0.83)	9.85	(0.91)
30	2-3 13/16	(706)	10.24	(0.95)	11.40	(1.06)	12.56	(1.17)
36	2-9 13/16	(859)	12.44	(1.16)	13.85	(1.29)	15.26	(1.42)
40	3-3 13/16	(1011)	14.65	(1.36)	16.31	(1.52)	17.97	(1.67)
46	3-9 13/16	(1164)	16.86	(1.57)	18.77	(1.74)	20.68	(1.92)
50	4-3 13/16	(1316)	19.07	(1.77)	21.23	(1.97)	23.39	(2.17)
56	4-9 13/16	(1468)	21.27	(1.98)	23.68	(2.20)	26.09	(2.42)
60	5-3 13/16	(1621)	23.48	(2.18)	26.14	(2.43)	28.80	(2.68)

Minimum and Maximum Guidelines

Minimum and Maximum Guidelines - Operable Units - OX, XO, XOX											
Unit Type		Min Rough Opening Size					Max Rough Opening Size				
		in	mm	×	in	mm	in	mm	×	in	mm
WUGL	OX, XO	29 1/2	(749)	×	18 1/16	(459)	71 1/2	(1816)	×	72 1/16	(1830)
WUGL	XOX	71 1/2	(1816)	×	18 1/16	(459)	119 1/2	(3035)	×	72 1/16	(1830)

Minimum and Maximum Guidelines - Picture Unit											
Unit Type		Min Rough Opening Size					Max Rough Opening Size				
		in	mm	×	in	mm	in	mm	×	in	mm
WUGLP	O	14	(356)	×	18 1/16	(459)	71 1/2	(1816)	×	72 1/16	(1830)

Certified Sizes and Rating: XO/OX and XOX

Certified Sizes and Ratings - XO, OX												
Unit Type	Frame Height			Frame Width								
				CN	in	mm	CN	in	mm	CN	in	mm
	CN	in	mm	30	35 1/2	(902)	36	41 1/2	(1054)	40	47 1/2	(1207)
WUGL	20	24 1/16	(611)	LC-PG50-HS			LC-PG50-HS			LC-PG50-HS		
	26	30 1/16	(764)	LC-PG50-HS			LC-PG50-HS			LC-PG50-HS		
	30	36 1/16	(916)	LC-PG50-HS			LC-PG50-HS			LC-PG50-HS		
	36	42 1/16	(1068)	LC-PG50-HS			LC-PG50-HS			LC-PG50-HS		
	40	48 1/16	(1221)	LC-PG50-HS			LC-PG50-HS			LC-PG50-HS		
	46	54 1/16	(1373)	LC-PG50-HS			LC-PG50-HS			LC-PG50-HS		
	50	60 1/16	(1526)	LC-PG50-HS			LC-PG50-HS			LC-PG50-HS		
	56	66 1/16	(1678)	LC-PG40-HS			LC-PG40-HS			LC-PG40-HS		
	60	72 1/16	(1830)	LC-PG40-HS			LC-PG40-HS			LC-PG40-HS		

Unit Type	Frame Height			Frame Width											
				CN	in	mm	CN	in	mm	CN	in	mm	CN	in	mm
	CN	in	mm	46	53 1/2	(1359)	50	59 1/2	(1511)	56	65 1/2	(1664)	60	71 1/2	(1816)
WUGL	20	24 1/16	(611)	LC-PG50-HS			LC-PG50-HS			LC-PG50-HS			LC-PG50-HS		
	26	30 1/16	(764)	LC-PG50-HS			LC-PG50-HS			LC-PG50-HS			LC-PG50-HS		
	30	36 1/16	(916)	LC-PG50-HS			LC-PG50-HS			LC-PG50-HS			LC-PG50-HS		
	36	42 1/16	(1068)	LC-PG50-HS			LC-PG50-HS			LC-PG50-HS			LC-PG50-HS		
	40	48 1/16	(1221)	LC-PG50-HS			LC-PG50-HS			LC-PG50-HS			LC-PG50-HS		
	46	54 1/16	(1373)	LC-PG50-HS			LC-PG50-HS			LC-PG50-HS			LC-PG50-HS		
	50	60 1/16	(1526)	LC-PG50-HS			LC-PG50-HS			LC-PG50-HS			LC-PG50-HS		
	56	66 1/16	(1678)	LC-PG40-HS			LC-PG40-HS			LC-PG40-HS			LC-PG40-HS		
	60	72 1/16	(1830)	LC-PG40-HS			LC-PG40-HS			LC-PG40-HS			LC-PG40-HS		

Certified Sizes and Ratings - XOX												
Unit Type	Frame Height			Frame Width								
				CN	in	mm	CN	in	mm	CN	in	mm
	CN	in	mm	60	71 1/2	(1816)	80	95 1/2	(2426)	100	119 1/2	(3035)
WUGL	20	24 1/16	(611)	LC-PG35-HS			LC-PG35-HS			LC-PG35-HS		
	26	30 1/16	(764)	LC-PG35-HS			LC-PG35-HS			LC-PG35-HS		
	30	36 1/16	(916)	LC-PG35-HS			LC-PG35-HS			LC-PG35-HS		
	36	42 1/16	(1068)	LC-PG35-HS			LC-PG35-HS			LC-PG35-HS		
	40	48 1/16	(1221)	LC-PG35-HS			LC-PG35-HS			LC-PG35-HS		
	46	54 1/16	(1373)	LC-PG35-HS			LC-PG35-HS			LC-PG35-HS		
	50	60 1/16	(1526)	LC-PG35-HS			LC-PG35-HS			LC-PG35-HS		
	56	66 1/16	(1678)	LC-PG35-HS			LC-PG35-HS			LC-PG35-HS		
	60	72 1/16	(1830)	LC-PG35-HS			LC-PG35-HS			LC-PG35-HS		

Certified Sizes and Ratings: Picture

Certified Sizes and Ratings - O												
Unit Type	Frame Height			Frame Width								
				CN	in	mm	CN	in	mm	CN	in	mm
	CN	in	mm	30	35 1/2	(902)	36	41 1/2	(1054)	40	47 1/2	(1207)
WUGL	20	24 1/16	(611)	LC-PG40-FW			LC-PG40-FW			LC-PG40-FW		
	26	30 1/16	(764)	LC-PG40-FW			LC-PG40-FW			LC-PG40-FW		
	30	36 1/16	(916)	LC-PG40-FW			LC-PG40-FW			LC-PG40-FW		
	36	42 1/16	(1068)	LC-PG40-FW			LC-PG40-FW			LC-PG40-FW		
	40	48 1/16	(1221)	LC-PG40-FW			LC-PG40-FW			LC-PG40-FW		
	46	54 1/16	(1373)	LC-PG40-FW			LC-PG40-FW			LC-PG40-FW		
	50	60 1/16	(1526)	LC-PG40-FW			LC-PG40-FW			LC-PG40-FW		
	56	66 1/16	(1678)	LC-PG40-FW			LC-PG40-FW			LC-PG40-FW		
	60	72 1/16	(1830)	LC-PG40-FW			LC-PG40-FW			LC-PG40-FW		

Unit Type	Frame Height			Frame Width											
				CN	in	mm	CN	in	mm	CN	in	mm	CN	in	mm
	CN	in	mm	46	53 1/2	(1359)	50	59 1/2	(1511)	56	65 1/2	(1664)	60	71 1/2	(1816)
WUGL	20	24 1/16	(611)	LC-PG40-FW			LC-PG40-FW			LC-PG40-FW			LC-PG40-FW		
	26	30 1/16	(764)	LC-PG40-FW			LC-PG40-FW			LC-PG40-FW			LC-PG40-FW		
	30	36 1/16	(916)	LC-PG40-FW			LC-PG40-FW			LC-PG40-FW			LC-PG40-FW		
	36	42 1/16	(1068)	LC-PG40-FW			LC-PG40-FW			LC-PG40-FW			LC-PG40-FW		
	40	48 1/16	(1221)	LC-PG40-FW			LC-PG40-FW			LC-PG40-FW			LC-PG40-FW		
	46	54 1/16	(1373)	LC-PG40-FW			LC-PG40-FW			LC-PG40-FW			LC-PG40-FW		
	50	60 1/16	(1526)	LC-PG40-FW			LC-PG40-FW			LC-PG40-FW			LC-PG40-FW		
	56	66 1/16	(1678)	LC-PG40-FW			LC-PG40-FW			LC-PG40-FW			LC-PG40-FW		
	60	72 1/16	(1830)	LC-PG40-FW			LC-PG40-FW			LC-PG40-FW			LC-PG40-FW		

Measurement Conversions: Picture and XO/OX Units

Unit Measurements - Picture Unit		Width O		Height	
From	To				
Rough Opening		**in**	**mm**	**in**	**mm**
OM of Frame	Rough Opening	+ 1	(25)	+ 1/2	(13)
Masonry Opening w/BMC	Rough Opening	-2 1/8	(54)	-1 1/16	(27)
Sash		**in**	**mm**	**in**	**mm**
OM of Frame	OM of Sash	-3	(76)	-3 13/16	(97)
Daylight Opening	OM of Sash	+ 6 17/32	(166)	+ 7 11/32	(90)
Glass		**in**	**mm**	**in**	**mm**
Daylight Opening	Glass	+ 1 1/16	(27)	+ 1 1/16	(27)

Unit Measurements - XO, OX Unit		Width OX, XO			Height	
From	To					
Rough Opening			**in**	**mm**	**in**	**mm**
OM of Frame	Rough Opening		+ 1	(25)	+ 1/2	(13)
Masonry Opening w/BMC	Rough Opening		-2 1/8	(54)	-1 1/16	(27)
Sash			**in**	**mm**	**in**	**mm**
OM of Frame	OM of Primary Sash	÷ 2	-1/2	(13)	-3 13/16	(97)
OM of Frame	OM of Secondary Sash	÷ 2	-17/32	(13)	-3 13/16	(97)
Daylight Opening	OM of Primary Sash		+ 3 31/32	(101)	+ 7 11/32	(187)
Daylight Opening	OM of Secondary Sash		+ 3 15/16	(100)	+ 3 17/32	(90)
Glass			**in**	**mm**	**in**	**mm**
Daylight Opening	Glass		+ 1 1/16	(27)	+ 1 1/16	(27)
Screen			**in**	**mm**	**in**	**mm**
OM of Frame	OM of Screen Frame	÷ 2	-2 5/8	(67)	-3 1/2	(89)
Daylight Opening	OM of Screen Frame	÷ 2	+ 1 27/32	(47)	-3 1/2	(89)
Combo			**in**	**mm**	**in**	**mm**
OM of Frame	OM of Combo Frame		-1 1/2	(38)	-1 17/32	(39)
Daylight Opening	OM of Combo Frame	× 2	+ 7 7/16	(189)	+ 5 13/16	(148)

Measurement Conversions: XOX Units

Unit Measurements - XOX Unit		Width XOX			Height	
From	To					
Rough Opening			**in**	**mm**	**in**	**mm**
OM of Frame	Rough Opening		+ 1	(25)	+ 1/2	(13)
Masonry Opening w/BMC	Rough Opening		-2 1/8	(54)	-1 1/16	(27)
Sash			**in**	**mm**	**in**	**mm**
OM of Frame	OM of Primary Sash	÷ 4	-5/8	(16)	-3 13/16	(97)
OM of Frame	OM of Secondary Sash	÷ 2	+ 2 3/16	(55)	-3 13/16	(97)
Daylight Opening	OM of Primary Sash		+ 3 31/32	(101)	+ 7 11/32	(187)
Daylight Opening	OM of Secondary Sash		+ 4 3/8	(111)	+ 3 17/32	(90)
Glass			**in**	**mm**	**in**	**mm**
Daylight Opening	Glass		+ 1 1/16	(27)	+ 1 1/16	(27)
Screen			**in**	**mm**	**in**	**mm**
OM of Frame	OM of Screen Frame	÷ 4	-2 3/4	(70)	-3 1/2	(89)
Daylight Opening	OM of Screen Frame	÷ 4	+ 1 27/32	(47)	-3 1/2	(89)
Combo			**in**	**mm**	**in**	**mm**
OM of Frame	OM of Combo Frame		-1 1/2	(38)	-1 17/32	(39)
Daylight Opening	OM of Combo Frame	× 4	+ 16 29/32	(429)	+ 5 13/16	(148)

Measurement Conversions

Clear Opening:

Triple Sash - Standard 1/4 - 1/2 - 1-4 Ratio

Clear Opening Width = (Frame OSM Width/4) - 3 5/32” (80)

Clear Opening Height = Frame OSM Height - 5 1/8” (130)

Clear Opening Area (ft. ^2) = (Clear Opening Width x Clear Opening Height) / 144

Vent Opening:

Vent Opening Width = Daylight Opening Width of the operating sash + 1 1/32”(26)

Vent Opening Height = Daylight Opening Height of the operating sash (standard bottom rail unit) + 2 9/16” (65)

Vent Opening Height = Daylight Opening Height of the operating sash (tall bottom rail unit) + 3 7/16” (87)

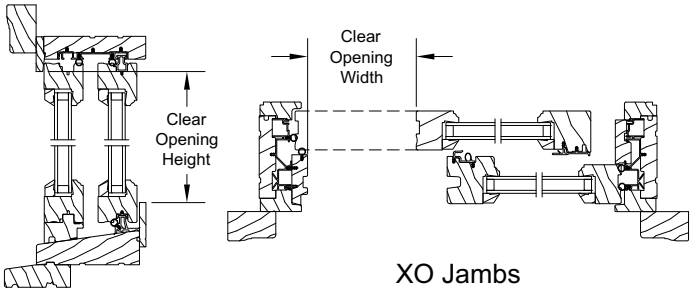

XO Jambs

Head Jamb and Sill

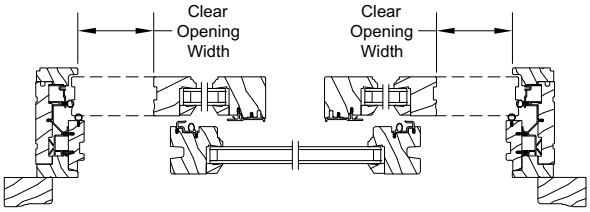

XOX Jambs

Standard Unit Measurements: XO/OX and XOX

Standard Glider Unit Measurements - XO, OX								
Width								
CN	Masonry Opening		Rough Opening		Frame Size		Daylight Opening	
	ft - in	mm	ft - in	mm	ft - in	mm	ft - in	mm
30	3-2 5/8	(981)	3-0 1/2	(927)	2-11 1/2	(902)	2-2 9/16	(674)
36	3-8 5/8	(1134)	3-6 1/2	(1080)	3-5 1/2	(1054)	2-8 9/16	(827)
40	4-2 5/8	(1286)	4-0 1/2	(1232)	3-11 1/2	(1207)	3-2 9/16	(979)
46	4-8 5/8	(1438)	4-6 1/2	(1384)	4-5 1/2	(1359)	3-8 9/16	(1132)
50	5-2 5/8	(1591)	5-0 1/2	(1537)	4-11 1/2	(1511)	4-2 9/16	(1284)
56	5-8 5/8	(1743)	5-6 1/2	(1689)	5-5 1/2	(1664)	4-8 9/16	(1436)
60	6-2 5/8	(1896)	6-0 1/2	(1842)	5-11 1/2	(1816)	5-2 9/16	(1589)

Standard Glider Unit Measurements - XO, OX										
Height										
CN	Masonry Opening		Rough Opening		Frame Size		Daylight Opening (Standard Bottom Rail)		Daylight Opening (Tall Bottom Rail)	
	ft - in	mm	ft - in	mm	ft - in	mm	ft - in	mm	ft - in	mm
20	2-1 5/8	(651)	2-0 9/16	(624)	2-0 1/16	(611)	1-4 11/16	(425)	1-3 13/16	(402)
26	2-7 5/8	(803)	2-6 9/16	(776)	2-6 1/16	(764)	1-10 11/16	(577)	1-9 13/16	(554)
30	3-1 5/8	(956)	3-0 9/16	(929)	3-0 1/16	(916)	2-4 11/16	(729)	2-3 13/16	(707)
36	3-7 5/8	(1108)	3-6 9/16	(1081)	3-6 1/16	(1068)	2-10 11/16	(882)	2-9 13/16	(859)
40	4-1 5/8	(1260)	4-0 9/16	(1233)	4-0 1/16	(1221)	3-4 11/16	(1034)	3-3 13/16	(1012)
46	4-7 5/8	(1413)	4-6 9/16	(1386)	4-6 1/16	(1373)	3-10 11/16	(1187)	3-9 13/16	(1164)
50	5-1 5/8	(1565)	5-0 9/16	(1538)	5-0 1/16	(1526)	4-4 11/16	(1339)	4-3 13/16	(1316)
56	5-7 5/8	(1718)	5-6 9/16	(1691)	5-6 1/16	(1678)	4-10 11/16	(1491)	4-9 13/16	(1469)
60	6-1 5/8	(1870)	6-0 9/16	(1843)	6-0 1/16	(1830)	5-4 11/16	(1644)	5-3 13/16	(1621)

Standard Glider Unit Measurements - XOX								
Width								
CN	Masonry Opening		Rough Opening		Frame Size		Daylight Opening	
	ft - in	mm	ft - in	mm	ft - in	mm	ft - in	mm
60	6-2 5/8	(1896)	6-0 1/2	(1842)	5-11 1/2	(1816)	5-0 1/8	(1527)
80	8-2 5/8	(2505)	8-0 1/2	(2451)	7-11 1/2	(2426)	7-0 1/8	(2137)
100	10-2 5/8	(3115)	10-0 1/2	(3061)	9-11 1/2	(3035)	9-0 1/8	(2746)

Standard Glider Unit Measurements - XOX										
Height										
CN	Masonry Opening		Rough Opening		Frame Size		Daylight Opening (Standard Bottom Rail)		Daylight Opening (Tall Bottom Rail)	
	ft - in	mm	ft - in	mm	ft - in	mm	ft - in	mm	ft - in	mm
20	2-1 5/8	(651)	2-0 9/16	(624)	2-0 1/16	(611)	1-4 11/16	(425)	1-3 13/16	(402)
26	2-7 5/8	(803)	2-6 9/16	(776)	2-6 1/16	(764)	1-10 11/16	(577)	1-9 13/16	(554)
30	3-1 5/8	(956)	3-0 9/16	(929)	3-0 1/16	(916)	2-4 11/16	(729)	2-3 13/16	(707)
36	3-7 5/8	(1108)	3-6 9/16	(1081)	3-6 1/16	(1068)	2-10 11/16	(882)	2-9 13/16	(859)
40	4-1 5/8	(1260)	4-0 9/16	(1233)	4-0 1/16	(1221)	3-4 11/16	(1034)	3-3 13/16	(1012)
46	4-7 5/8	(1413)	4-6 9/16	(1386)	4-6 1/16	(1373)	3-10 11/16	(1187)	3-9 13/16	(1164)
50	5-1 5/8	(1565)	5-0 9/16	(1538)	5-0 1/16	(1526)	4-4 11/16	(1339)	4-3 13/16	(1316)
56	5-7 5/8	(1718)	5-6 9/16	(1691)	5-6 1/16	(1678)	4-10 11/16	(1491)	4-9 13/16	(1469)
60	6-1 5/8	(1870)	6-0 9/16	(1843)	6-0 1/16	(1830)	5-4 11/16	(1644)	5-3 13/16	(1621)

Standard Unit Measurements: Picture Units

Standard Glider Picture Unit Measurements - O								
Width								
CN	Masonry Opening		Rough Opening		Frame Size		Daylight Opening	
	ft - in	mm	ft - in	mm	ft - in	mm	ft - in	mm
30	3-2 5/8	(981)	3-0 1/2	(927)	2-11 1/2	(902)	2-5	(737)
36	3-8 5/8	(1134)	3-6 1/2	(1080)	3-5 1/2	(1054)	2-11	(889)
40	4-2 5/8	(1286)	4-0 1/2	(1232)	3-11 1/2	(1207)	3-5	(1041)
46	4-8 5/8	(1438)	4-6 1/2	(1384)	4-5 1/2	(1359)	3-11	(1194)
50	5-2 5/8	(1591)	5-0 1/2	(1537)	4-11 1/2	(1511)	4-5	(1346)
56	5-8 5/8	(1743)	5-6 1/2	(1689)	5-5 1/2	(1664)	4-11	(1499)
60	6-2 5/8	(1896)	6-0 1/2	(1842)	5-11 1/2	(1816)	5-5	(1651)

Standard Glider Picture Unit Measurements - O										
Height										
CN	Masonry Opening		Rough Opening		Frame Size		Daylight Opening (Standard Bottom Rail)		Daylight Opening (Tall Bottom Rail)	
	ft - in	mm	ft - in	mm	ft - in	mm	ft - in	mm	ft - in	mm
20	2-1 5/8	(651)	2-0 9/16	(624)	2-0 1/16	(611)	1-4 11/16	(424)	1-3 13/16	(402)
26	2-7 5/8	(803)	2-6 9/16	(776)	2-6 1/16	(764)	1-10 11/16	(576)	1-9 13/16	(554)
30	3-1 5/8	(956)	3-0 9/16	(929)	3-0 1/16	(916)	2-4 11/16	(729)	2-3 13/16	(706)
36	3-7 5/8	(1108)	3-6 9/16	(1081)	3-6 1/16	(1068)	2-10 11/16	(881)	2-9 13/16	(859)
40	4-1 5/8	(1260)	4-0 9/16	(1233)	4-0 1/16	(1221)	3-4 11/16	(1033)	3-3 13/16	(1011)
46	4-7 5/8	(1413)	4-6 9/16	(1386)	4-6 1/16	(1373)	3-10 11/16	(1186)	3-9 13/16	(1164)
50	5-1 5/8	(1565)	5-0 9/16	(1538)	5-0 1/16	(1526)	4-4 11/16	(1338)	4-3 13/16	(1316)
56	5-7 5/8	(1718)	5-6 9/16	(1691)	5-6 1/16	(1678)	4-10 11/16	(1491)	4-9 13/16	(1468)
60	6-1 5/8	(1870)	6-0 9/16	(1843)	6-0 1/16	(1830)	5-4 11/16	(1643)	5-3 13/16	(1621)

Section Details: XO/OX and Triple Sash

Scale: 3" = 1' 0"

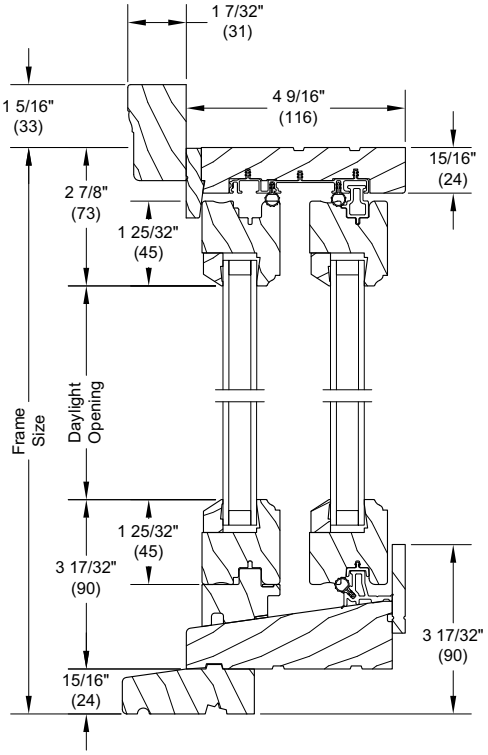

Head Jamb and Sill

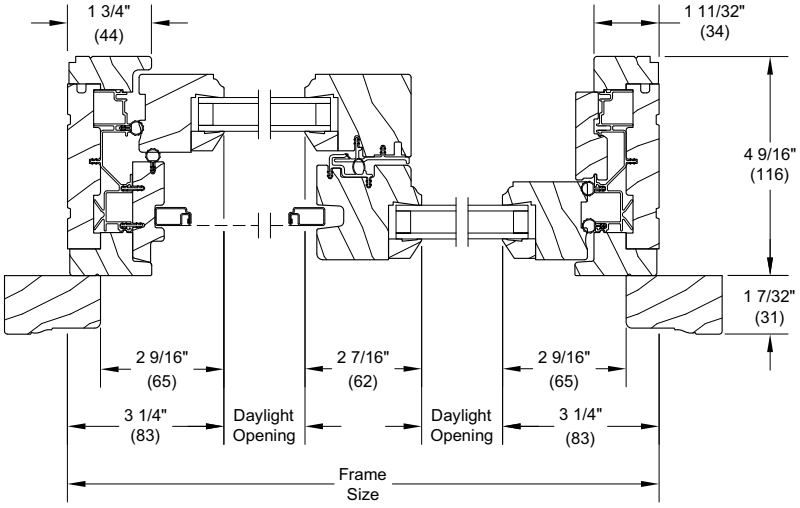

XO Jambs

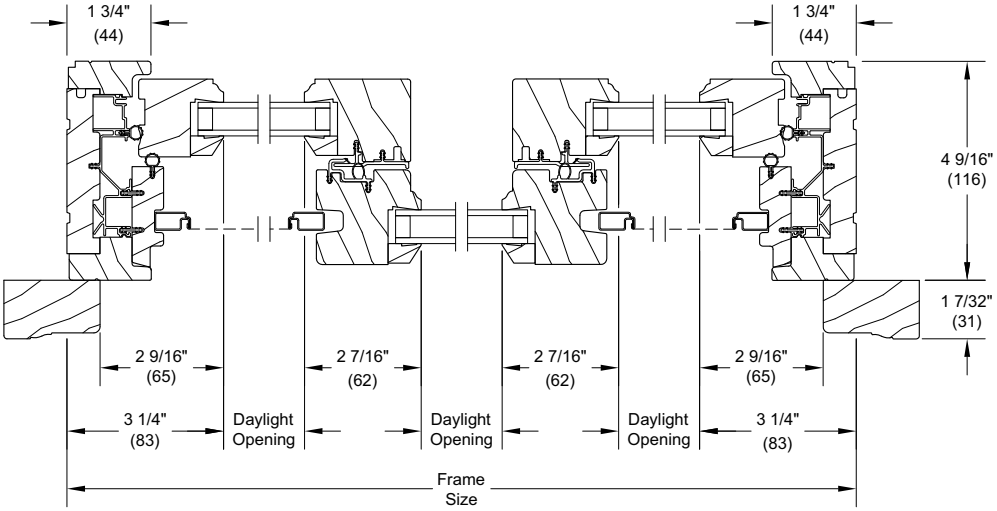

XOX Jambs

Section Details: Picture/Combination

Scale: 3" = 1' 0"

Picture

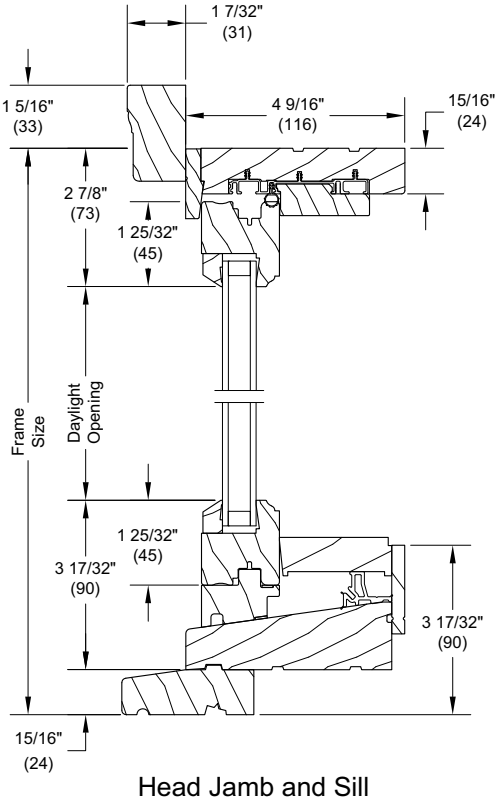

Head Jamb and Sill

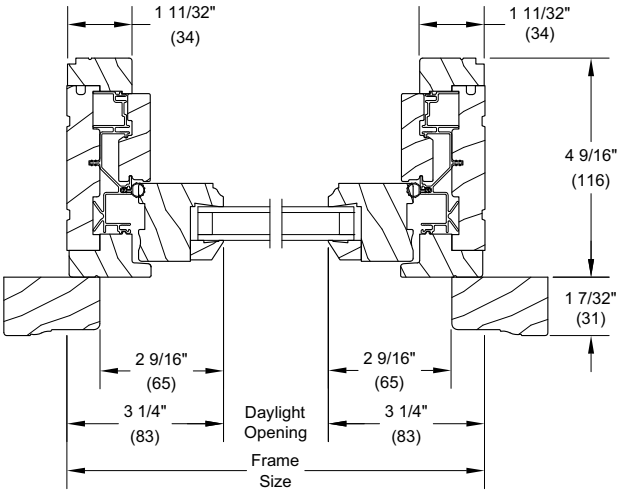

Jambs

4 9/16" Operator with Combination

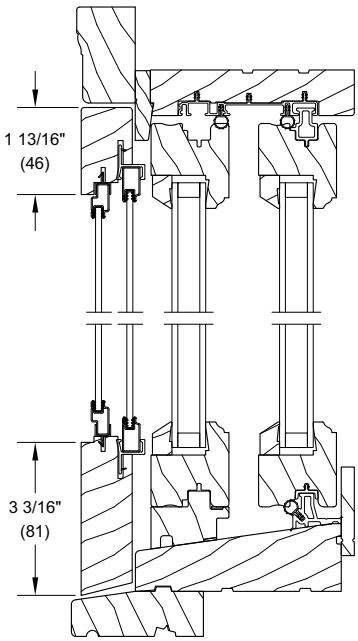

Head Jamb and Sill

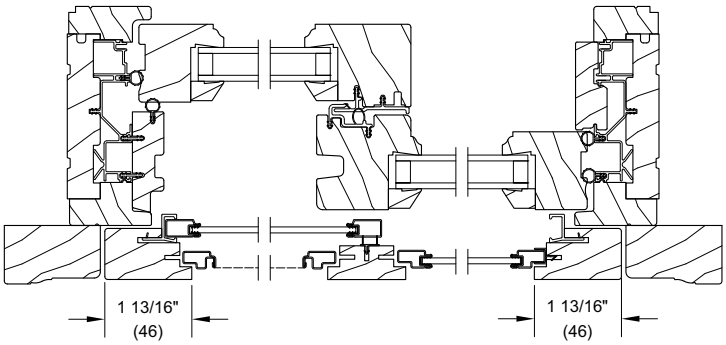

Jambs

Mullions

Scale: 3" = 1' 0"

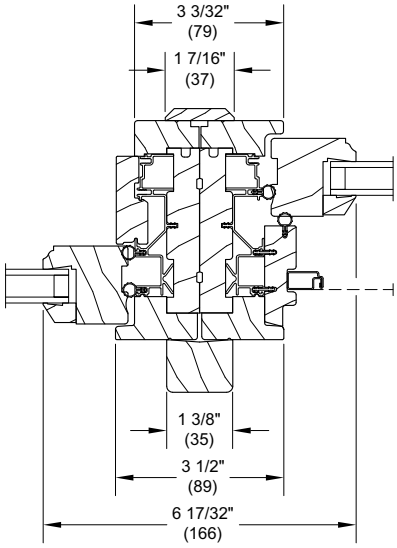

Vertical Mullion-Operator/Operator

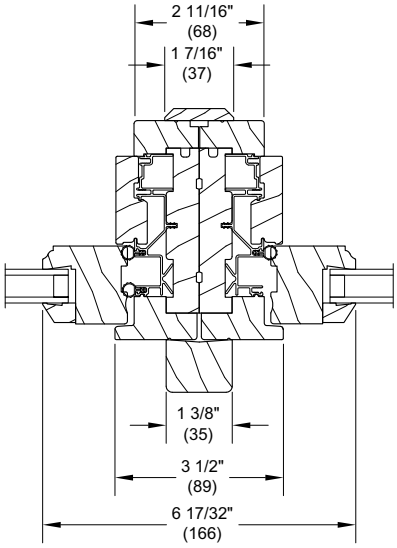

Vertical Mullion-Operator/Picture

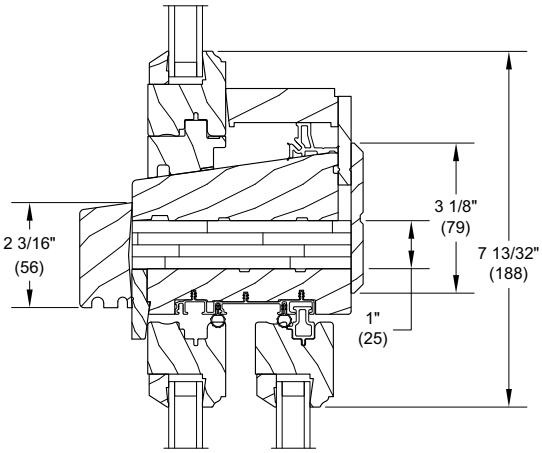

Picture - 1" LVL - mulled over
Wood Ultimate Glider

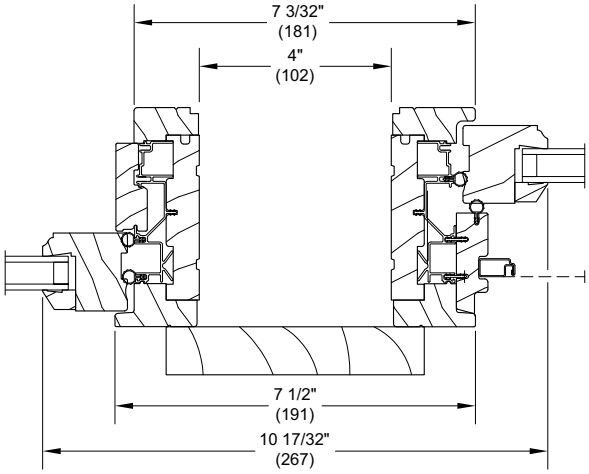

4" Space Mull