Wood Ultimate French Casement Crank Out

Unit Features 1
Egress and Vent Openings 2
Daylight Measurements 3
Minimum and Maximum Guidelines, Certified Sizes and Rating 4
Conversion Table 5
Standard Unit Measurements 6
Section Details: 3/4" IG Operator/Stationary Meeting Stiles 7

Unit Features

Wood Ultimate French Crank Out- WUFCA

Wood Ultimate French Casement units feature two (2) sashes, that when open there is no mull post in the middle.
(LH - Primary sash from exterior) (RH - Secondary sash from exterior)

WUFCA Hardware

- A multi-point mechanism is applied to the perimeter of the primary sash. The French Casement lock is actuated by a locking lever that is mounted near the midpoint of the sill on the interior face of the sill stop. Strike plates are mounted to the sill, head and secondary sash to provide interlocking of the sash to the frame. The roto mechanism allows each sash to crank out to 90 degrees.
- There are 2 E-Gard® coated hinges. One is connected at the sill and bottom rail and second one connected at the head jamb and top rail. The tracks are stainless steel.
- The standard crank handles are folding handles.
- Crank out units do not have the wash mode hinge option. Frames with an OM of 40" to 45 1/16" use a 10" Dyad Hinge. Units that are 45 1/16" to 60" use a 10" non wash mode standard hinge. Single arm hinges greater than 9 3/4" will open a full 90 degrees. Operating force at the handles is less than 5 lbs.
- The standard finish available for the locking handles is Satin Taupe (painted), with options for White (painted), Bronze (painted), Satin Chrome (plated), Satin Nickel (plated), Oil Rubbed Bronze (plated), Brass (plated) Antique Brass (plated) and Polished Chrome (plated).

Weather Strip:

- Astragal weather strip is a bulb shaped made of polypropylene material, formulated to be UV resistance and has a low COE.

Egress and Vent Openings

CN	Clear Opening Width		Clear Opening Height		Egress Opening			Opening Vent Width		Opening Vent Height		Vent Opening	
	ft - in	mm	ft - in	mm	ft^2	mm^2	E	ft - in	mm	ft - in	mm	ft^2	mm^2
4032	2-0 7/8	(632)	2-2	(661)	4.49	(0.42)		2-11 1/32	(889)	2-2	(661)	6.33	(0.59)
4036	2-0 7/8	(632)	2-6	(762)	5.18	(0.48)		2-11 1/32	(889)	2-6	(762)	7.30	(0.68)
4040	2-0 7/8	(632)	2-10	(864)	5.87	(0.55)	E	2-11 1/32	(889)	2-10	(864)	8.27	(0.77)
4044	2-0 7/8	(632)	3-2	(965)	6.56	(0.61)	E	2-11 1/32	(889)	3-2	(965)	9.24	(0.86)
4048	2-0 7/8	(632)	3-6	(1067)	7.26	(0.67)	E	2-11 1/32	(889)	3-6	(1067)	10.22	(0.95)
4054	2-0 7/8	(632)	4-0	(1219)	8.29	(0.77)	E	2-11 1/32	(889)	4-0	(1219)	11.67	(1.08)
4056	2-0 7/8	(632)	4-2	(1270)	8.64	(0.80)	E	2-11 1/32	(889)	4-2	(1270)	12.16	(1.13)
4060	2-0 7/8	(632)	4-6	(1372)	9.33	(0.87)	E	2-11 1/32	(889)	4-6	(1372)	13.13	(1.22)
4064	2-0 7/8	(632)	4-10	(1473)	10.02	(0.93)	E	2-11 1/32	(889)	4-10	(1473)	14.11	(1.31)
4072 T	2-0 7/8	(632)	5-6	(1677)	11.40	(1.06)	E	2-11 1/32	(889)	5-6	(1677)	16.05	(1.49)
4832	2-10 15/16	(888)	2-2	(661)	6.31	(0.59)	E	3-7 1/32	(1093)	2-2	(661)	7.77	(0.72)
4836	2-10 15/16	(888)	2-6	(762)	7.28	(0.68)	E	3-7 1/32	(1093)	2-6	(762)	8.96	(0.83)
4840	2-10 15/16	(888)	2-10	(864)	8.25	(0.77)	E	3-7 1/32	(1093)	2-10	(864)	10.16	(0.94)
4844	2-10 15/16	(888)	3-2	(965)	9.22	(0.86)	E	3-7 1/32	(1093)	3-2	(965)	11.35	(1.05)
4848	2-10 15/16	(888)	3-6	(1067)	10.19	(0.95)	E	3-7 1/32	(1093)	3-6	(1067)	12.55	(1.17)
4854	2-10 15/16	(888)	4-0	(1219)	11.65	(1.08)	E	3-7 1/32	(1093)	4-0	(1219)	14.34	(1.33)
4856	2-10 15/16	(888)	4-2	(1270)	12.13	(1.13)	E	3-7 1/32	(1093)	4-2	(1270)	14.94	(1.39)
4860	2-10 15/16	(888)	4-6	(1372)	13.10	(1.22)	E	3-7 1/32	(1093)	4-6	(1372)	16.13	(1.50)
4864	2-10 15/16	(888)	4-10	(1473)	14.07	(1.31)	E	3-7 1/32	(1093)	4-10	(1473)	17.33	(1.61)
4872 T	2-10 15/16	(888)	5-6	(1677)	16.01	(1.49)	E	3-7 1/32	(1093)	5-6	(1677)	19.72	(1.83)
5632	3-6 15/16	(1091)	2-2	(661)	7.75	(0.72)	E	4-3 1/32	(1296)	2-2	(661)	9.22	(0.86)
5636	3-6 15/16	(1091)	2-6	(762)	8.95	(0.83)	E	4-3 1/32	(1296)	2-6	(762)	10.63	(0.99)
5640	3-6 15/16	(1091)	2-10	(864)	10.14	(0.94)	E	4-3 1/32	(1296)	2-10	(864)	12.05	(1.12)
5644	3-6 15/16	(1091)	3-2	(965)	11.33	(1.05)	E	4-3 1/32	(1296)	3-2	(965)	13.47	(1.25)
5648	3-6 15/16	(1091)	3-6	(1067)	12.52	(1.16)	E	4-3 1/32	(1296)	3-6	(1067)	14.88	(1.38)
5654	3-6 15/16	(1091)	4-0	(1219)	14.31	(1.33)	E	4-3 1/32	(1296)	4-0	(1219)	17.01	(1.58)
5656	3-6 15/16	(1091)	4-2	(1270)	14.91	(1.39)	E	4-3 1/32	(1296)	4-2	(1270)	17.72	(1.65)
5660	3-6 15/16	(1091)	4-6	(1372)	16.10	(1.50)	E	4-3 1/32	(1296)	4-6	(1372)	19.13	(1.78)
5664	3-6 15/16	(1091)	4-10	(1473)	17.29	(1.61)	E	4-3 1/32	(1296)	4-10	(1473)	20.55	(1.91)
5672 T	3-6 15/16	(1091)	5-6	(1677)	19.68	(1.83)	E	4-3 1/32	(1296)	5-6	(1677)	23.39	(2.17)
6032	3-10 15/16	(1192)	2-2	(661)	8.47	(0.79)	E	4-7 1/32	(1397)	2-2	(661)	9.94	(0.92)
6036	3-10 15/16	(1192)	2-6	(762)	9.78	(0.91)	E	4-7 1/32	(1397)	2-6	(762)	11.47	(1.07)
6040	3-10 15/16	(1192)	2-10	(864)	11.08	(1.03)	E	4-7 1/32	(1397)	2-10	(864)	12.99	(1.21)
6044	3-10 15/16	(1192)	3-2	(965)	12.39	(1.15)	E	4-7 1/32	(1397)	3-2	(965)	14.52	(1.35)
6048	3-10 15/16	(1192)	3-6	(1067)	13.69	(1.27)	E	4-7 1/32	(1397)	3-6	(1067)	16.05	(1.49)
6054	3-10 15/16	(1192)	4-0	(1219)	15.65	(1.45)	E	4-7 1/32	(1397)	4-0	(1219)	18.34	(1.70)
6056	3-10 15/16	(1192)	4-2	(1270)	16.30	(1.51)	E	4-7 1/32	(1397)	4-2	(1270)	19.11	(1.78)
6060	3-10 15/16	(1192)	4-6	(1372)	17.60	(1.64)	E	4-7 1/32	(1397)	4-6	(1372)	20.64	(1.92)
6064 T	3-10 15/16	(1192)	4-10	(1473)	18.91	(1.76)	E	4-7 1/32	(1397)	4-10	(1473)	22.16	(2.06)
6072 T	3-10 15/16	(1192)	5-6	(1677)	21.51	(2.00)	E	4-7 1/32	(1397)	5-6	(1677)	25.22	(2.34)

Daylight Measurements

Wood Ultimate Awning Daylight Measurements			Width							
		CN	40		48		56		60	
		DLO	2-10 7/32	(869)	3-6 7/32	(1072)	4-2 7/32	(1275)	4-6 7/32	(1377)
CN	DLO Height		Square Feet (Square Meters)							
			Standard Bottom Rail							
32	2-1 5/16	(643)	6.01	(0.56)	7.42	(0.69)	8.83	(0.82)	9.53	(0.89)
36	2-5 5/16	(745)	6.96	(0.65)	8.59	(0.80)	10.22	(0.95)	11.03	(1.03)
40	2-9 5/16	(846)	7.91	(0.74)	9.76	(0.91)	11.61	(1.08)	12.54	(1.17)
44	3-1 5/16	(948)	8.86	(0.82)	10.94	(1.02)	13.01	(1.21)	14.05	(1.30)
48	3-5 5/16	(1049)	9.81	(0.91)	12.11	(1.12)	14.40	(1.34)	15.55	(1.44)
54	3-11 5/16	(1202)	11.24	(1.04)	13.87	(1.29)	16.50	(1.53)	17.81	(1.65)
56	4-1 5/16	(1253)	11.71	(1.09)	14.45	(1.34)	17.19	(1.60)	18.56	(1.72)
60	4-5 5/16	(1354)	12.66	(1.18)	15.63	(1.45)	18.59	(1.73)	20.07	(1.86)
64	4-9 5/16	(1456)	13.61	(1.26)	16.80	(1.56)	19.98	(1.86)	21.57	(2.00)
72	5-5 5/16	(1659)	15.52	(1.44)	19.14	(1.78)	22.77	(2.12)	24.59	(2.28)
			Tall Bottom Rail							
32	1-11 13/16	(605)	5.66	(0.53)	6.98	(0.65)	8.30	(0.77)	8.96	(0.83)
36	2-3 13/16	(706)	6.61	(0.61)	8.15	(0.76)	9.70	(0.90)	10.47	(0.97)
40	2-7 13/16	(808)	7.56	(0.70)	9.32	(0.87)	11.09	(1.03)	11.98	(1.11)
44	2-11 13/16	(910)	8.51	(0.79)	10.50	(0.98)	12.49	(1.16)	13.48	(1.25)
48	3-3 13/16	(1011)	9.46	(0.88)	11.67	(1.08)	13.88	(1.29)	14.99	(1.39)
54	3-9 13/16	(1164)	10.88	(1.01)	13.43	(1.25)	15.97	(1.48)	17.25	(1.60)
56	3-11 13/16	(1214)	11.36	(1.06)	14.01	(1.30)	16.67	(1.55)	18. 0	(1.67)
60	4-3 13/16	(1316)	12.31	(1.14)	15.19	(1.41)	18.07	(1.68)	19.50	(1.81)
64	4-7 13/16	(1418)	13.26	(1.23)	16.36	(1.52)	19.46	(1.81)	21.01	(1.95)
72	5-3 13/16	(1621)	15.16	(1.41)	18.70	(1.74)	22.25	(2.07)	24.02	(2.23)

Minimum and Maximum Guidelines, Certified Sizes and Rating

Minimum and Maximum Guidelines - Operable French Casement										
Unit Type	Frame Size									
	Min Size Unit					Max Size Unit				
	in	mm	×	in	mm	in	mm	×	in	mm
WUFCA	40	(1016)	×	21	(533)	60	(1524)	×	72 1/16	(1830)

Certified Sizes and Ratings						
Unit Type	Frame Height		Frame Width			
			in	mm	in	mm
	in	mm	56	(1422)	60	(1524)
WUFCA	60 1/16	(1526)	LC-PG40-C		Not Rated	
	72 1/16	(1830)	Not Rated		LC-PG30-C	

Conversion Table

Unit Measurements		Width				Height	
From	**To**						
Rough Opening				**in**	**mm**	**in**	**mm**
OM of Frame	Rough Opening			+ 1	(25)	+ 1/2	(13)
Masonry Opening w/BMC	Rough Opening			-2 5/8	(67)	-1 5/16	(33)
Sash				**in**	**mm**	**in**	**mm**
OM of Frame	OM of Sash	÷	2	-1 15/16	(49)	-2 9/16	(65)
Daylight Opening (Std Btm Rail)	OM of Sash			+ 4 1/8	(104)	+ 4 1/8	(104)
Daylight Opening (Tall Btm Rail)	OM of Sash			+ 4 1/8	(104)	+ 5 19/32	(142)
Glass				**in**	**mm**	**in**	**mm**
Daylight Opening	Glass			+ 1 3/32	(28)	+ 1 3/32	(28)
Screen				**in**	**mm**	**in**	**mm**
OM of Frame	OM of Screen			-4 9/32	(109)	-5 25/32	(147)
Daylight Opening (Std Btm Rail)	OM of Screen			+ 6 1/32	(153)	+ 15/16	(24)
Daylight Opening (Tall Btm Rail)	OM of Screen			+ 6 1/32	(153)	+ 2 7/16	(62)

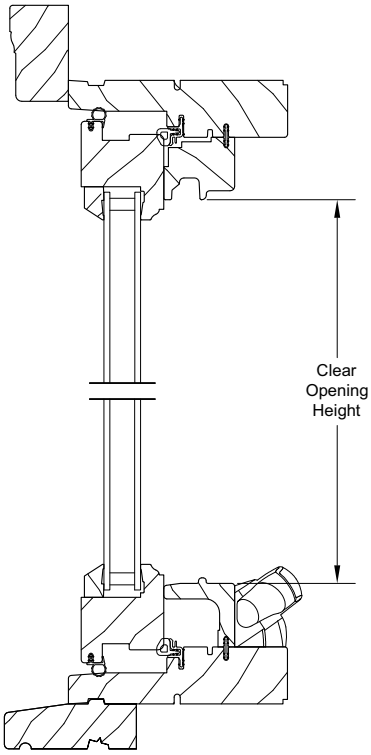

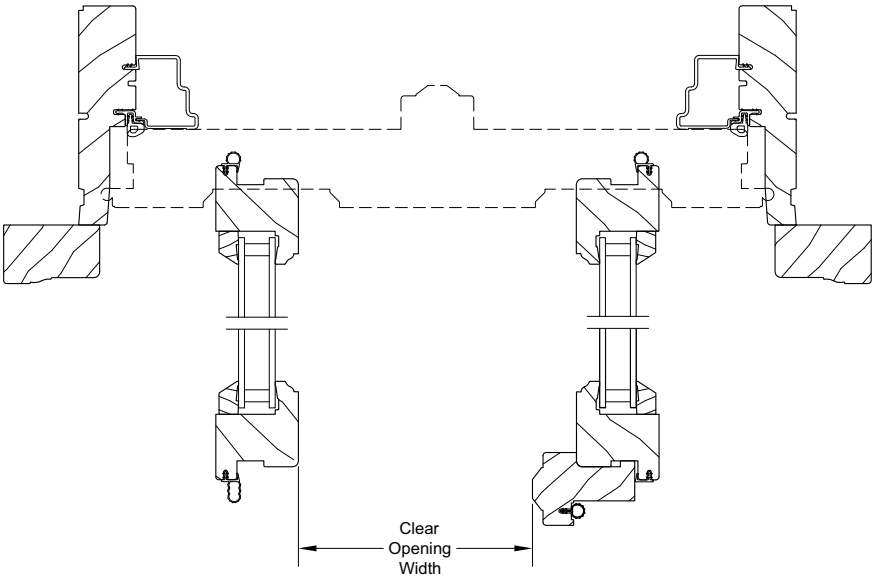

Standard Unit Measurements

Standard Ultimate French Casement Unit Measurements								
Width								
CN	Masonry Opening		Rough Opening		Frame Size		Daylight Opening	
	ft - in	mm	ft - in	mm	ft - in	mm	ft - in	mm
40	3-7 5/8	(1108)	3-5	(1041)	3-4	(1016)	2-10 7/32	(869)
48	4-3 5/8	(1311)	4-1	(1245)	4-0	(1219)	3-6 7/32	(1072)
56	4-11 5/8	(1514)	4-9	(1448)	4-8	(1422)	4-2 7/32	(1275)
60	5-3 5/8	(1616)	5-1	(1549)	5-0	(1524)	4-6 7/32	(1377)

Standard Ultimate French Casement Unit Measurements										
Height										
CN	Masonry Opening		Rough Opening		Frame Size (with subsill)		Daylight Opening (Std Bottom Rail)		Daylight Opening (Tall Bottom Rail)	
	ft - in	mm	ft - in	mm	ft - in	mm	ft - in	mm	ft - in	mm
32	2-9 7/8	(860)	2-8 9/16	(827)	2-8 1/16	(814)	2-1 5/16	(643)	1-11 13/16	(605)
36	3-1 7/8	(962)	3-0 9/16	(929)	3-0 1/16	(916)	2-5 5/16	(745)	2-3 13/16	(706)
40	3-5 7/8	(1064)	3-4 9/16	(1030)	3-4 1/16	(1018)	2-9 5/16	(846)	2-7 13/16	(808)
44	3-9 7/8	(1165)	3-8 9/16	(1132)	3-8 1/16	(1119)	3-1 5/16	(948)	2-11 13/16	(910)
48	4-1 7/8	(1267)	4-0 9/16	(1233)	4-0 1/16	(1221)	3-5 5/16	(1049)	3-3 13/16	(1011)
54	4-7 7/8	(1419)	4-6 9/16	(1386)	4-6 1/16	(1373)	3-11 5/16	(1202)	3-9 13/16	(1164)
56	4-9 7/8	(1470)	4-8 9/16	(1437)	4-8 1/16	(1424)	4-1 5/16	(1253)	3-11 13/16	(1214)
60	5-1 7/8	(1572)	5-0 9/16	(1538)	5-0 1/16	(1526)	4-5 5/16	(1354)	4-3 13/16	(1316)
64	5-5 7/8	(1673)	5-4 9/16	(1640)	5-4 1/16	(1627)	4-9 5/16	(1456)	4-7 13/16	(1418)
72	6-1 7/8	(1876)	6-0 9/16	(1843)	6-0 1/16	(1830)	5-5 5/16	(1659)	5-3 13/16	(1621)

Section Details: 3/4" IG Operator/Stationary Meeting Stiles

Scale: 3" = 1' 0"

Operating

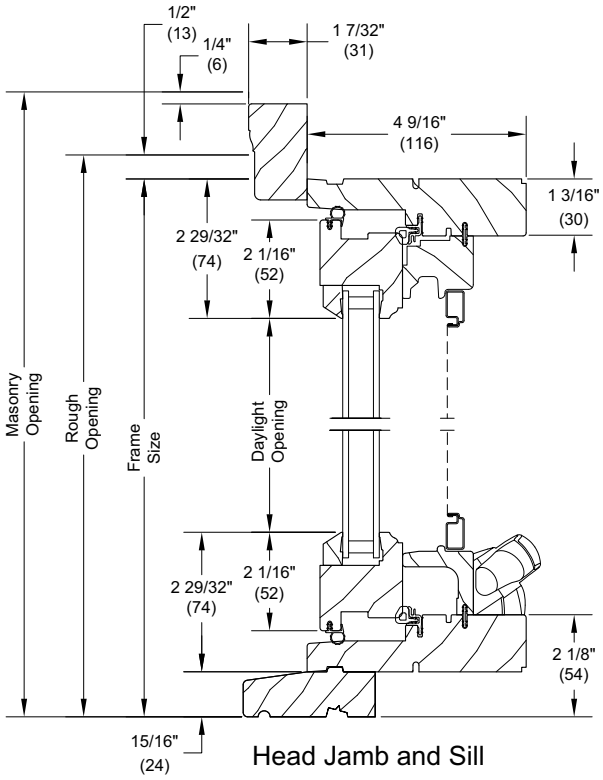

Head Jamb and Sill

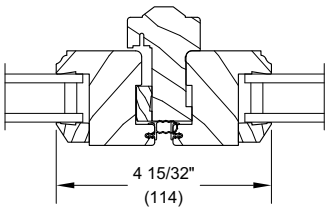

Stationary
Meeting Stile-1" IG

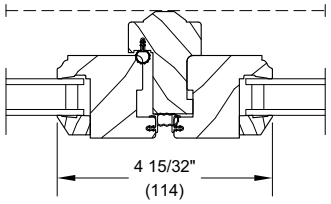

Operating
Meeting Stile-3/4" IG

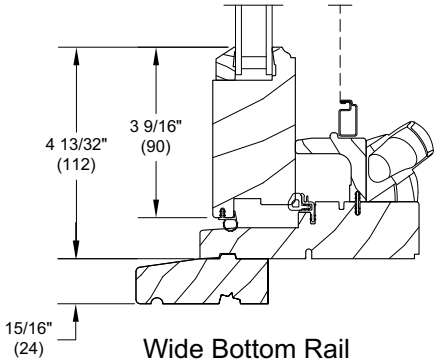

Wide Bottom Rail

Stationary

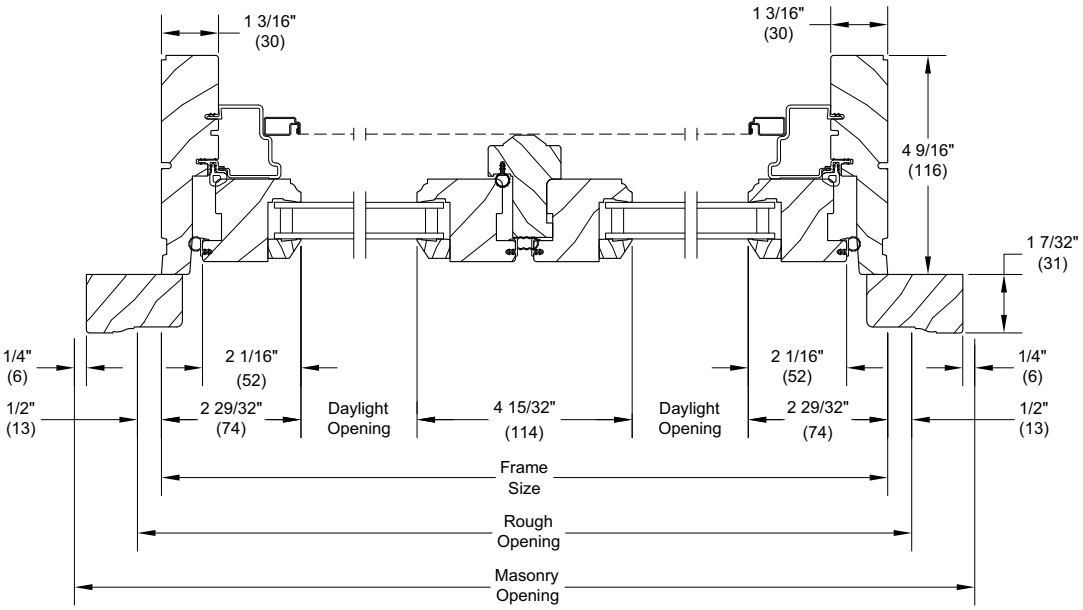

Jambs