Wood Ultimate Double Hung Magnum

Unit Features 1
Egress and Vent Openings 2
Minimum and Maximum Guidelines/Certified Sizes and Ratings: Standard 3
Minimum and Maximum Guidelines/Certified Sizes and Ratings: IZ3 4
Measurement Conversions 5
Section Details: Operating 6
Section Details: Transom 7
Section Details: Picture 8
Section Details: Combination and Storm Sash 9
Section Details: Mullions 10

Unit Features

Wood Ultimate Double Hung Magnum: WUDHM

Wood Ultimate Single Hung Magnum: WUSHM

Wood Ultimate Double Hung Magnum Picture: WUDHMP

Wood Ultimate Double Hung Magnum Transom: WUDHMT

Operating Hardware:

- Sash lock and keeper: surface mounted, open style crescent cam lock. Two locks on glass of 36" (914) and wider. Color: Satin Taupe.
  - Optional colors: Bronze, White, Brass, Antique Brass, Satin Chrome, Satin Nickel, and Oil Rubbed Bronze.
- Balance System: Spiral balance system, designed to balance sash from 10 lbs. to 130 lbs.
- Pivot pins two per sash made of stainless steel are used. Clutches two per sash designed to receive the pivot pin and are designed to support sash weight up to 130 lbs.
- Tilt latch provided for easy tilting of the top sash inward, located at check rail.
- Optional Sash lift: same colors as offered in locks.
- Optional window opening control device field applied.

Optional Glass:

- 1" Tri-pane LoĒ-180™ outer piece and LoĒ-180™ inner piece with Argon
- 1" Tri-pane LoĒ-180™ outer piece and LoĒ-180™ inner piece with Krypton/Argon
- 1" Tri-pane LoĒ²272® outer piece and LoĒ²272® inner piece with Argon
- 1" Tri-pane LoĒ²272® outer piece and LoĒ²272® inner piece with Krypton/Argon
- 1" Tri-pane LoĒ 366® outer piece and LoĒ-180™ inner piece with Argon
- 1" Tri-pane LoĒ 366® outer piece and LoĒ-180™ inner piece with Krypton/Argon

Egress and Vent Openings

Scale: 1 1/2” = 1’ 0"

Egress Conversions		
Glass Size Width = 1 7/8" (48) = Egress Width Rough Opening Width - 4 1/2" (114) = Egress Width		
Glass Size Height	**Rough Opening Height**	**Egress Height**
20" (508) to less than 28" (711)	49 1/2" (1257) to less than 65 1/2" (1664)	16 1/2" (419)
28" (711) to less than 38" (965)	65 1/2" (1664) to less than 85 1/2" (2172)	24 1/2" (622)
38" (965) to less than 49" (1245)	85 1/2" (2172) to less than 107 1/2" (2731)	34 1/2" (876)
49" (1245) to less than 60" (1524)	107 1/2" (2731) to less than 129 1/2" (3289)	45 1/2" (1156)

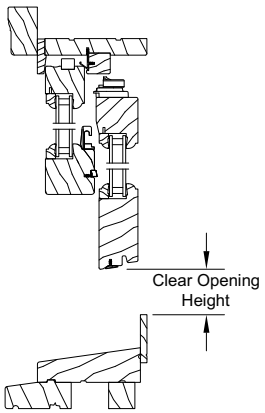

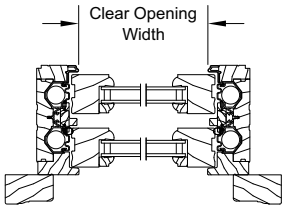

Minimum and Maximum Guidelines/Certified Sizes and Ratings: Standard

Minimum and Maximum Guidelines											
Unit Type		Frame Size									
		Width		×	Height		Width		×	Height	
		in	mm	×	in	mm	in	mm	×	in	mm
WUDHM	Insulating Glass	25 3/8	(645)	×	49	(1245)	59 3/8	(1508)	×	121	(3073)
WUDHM	Single Glaze	25 3/8	(645)	×	49	(1245)	59 3/8	(1508)	×	121	(3073)
WUDHT	Insulating Glass	13 3/8	(340)	×	13 3/8	(340)	73 3/8	(1864)	×	25 3/8	(645)
WUDHT	Single Glaze	13 3/8	(340)	×	13 3/8	(340)	73 3/8	(1864)	×	25 3/8	(645)
WUDHMP	Insulating Glass	13 3/8	(340)	×	15 11/16	(398)	61 7/8	(1572)	×	105	(2667)
WUDHMP	1" Insulating Glass	13 3/8	(340)	×	15 11/16	(398)	61 7/8	(1572)	×	105	(2667)
WUDHMP	Single Glaze	13 3/8	(340)	×	15 11/16	(398)	61 7/8	(1572)	×	105	(2667)

Certified Sizes and Ratings						
Unit Type	**Frame Height**		**Width**			
			in	**mm**	**in**	**mm**
	in	**mm**	53 3/8	(1356)	59 3/8	(1508)
WUDHM	105	(2667)	LC-PG50-H		LC-PG35-H	
WUDHM	121	(3073)	LC-PG35-H		LC-PG35-H	

Certified Sizes and Ratings				
Unit Type	**Frame Height**		**Frame Width**	
			in	**mm**
	in	**mm**	61 3/8	(1559)
WUDHMP	105	(2667)	CW-PG50-FW	

Certified Sizes and Ratings				
Unit Type	**Frame Height**		**Frame Width**	
			in	**mm**
	in	**mm**	73 3/8	(1864)
WUDHMT	26 1/2	(673)	LC-PG40-TR	

Minimum and Maximum Guidelines/Certified Sizes and Ratings: IZ3

IZ3 Minimum and Maximum Guidelines											
Unit Type		Frame Size									
		Width		×	Height		Width		×	Height	
		in	mm	×	in	mm	in	mm	×	in	mm
WUDHM	Insulating Glass	21 3/8	(543)	×	33	(838)	53 3/8	(1356)	×	105	(2667)
WUDHM	Insulating Glass	15 3/8	(391)	×	65	(1651)	47 3/8	(1203)	×	121	(3073)

Certified Sizes and Ratings - IZ3						
Unit Type	Frame Height		Width			
			in	mm	in	mm
	in	mm	47 3/8	(1203)	53 3/8	(1356)
WUDHM	105	(2667)	LC-PG50-H		LC-PG50-H	
WUDHM	121	(3073)	LC-PG50-H		Not Certified	

Measurement Conversions

Wood Ultimate Double Hung Magnum						
		Width		Height		
From	To					
Frame Size		**in**	**mm**		**in**	**mm**
OM of Frame	Rough Opening	+ 1	(25)		+ 1/2	(13)
Masonry Opening w/BMC	Frame Size	-3 1/8	(79)		-1 9/16	(40)
Glass		**in**	**mm**		**in**	**mm**
Daylight Opening	Glass	+ 1 1/16	(27)		+ 1 1/16	(27)
Screen		**in**	**mm**		**in**	**mm**
OM of Frame	OM of Screen	-1 1/2	(38)		-1 7/8	(48)
Daylight Opening	OM of Screen	+ 4 3/8	(111)	× 2	+ 8 21/32	(220)
Half Screen		**in**	**mm**		**in**	**mm**
OM of Frame	OM of Screen	-1 1/2	(38)	÷ 2	+ 1/2	(13)
Daylight Opening	OM of Screen	+ 4 3/8	(111)		+ 5 5/16	(135)

Clad Ultimate Double Hung Magnum Transom w/out subsill					
Unit Measurements		Width		Height	
From	To				
Frame Size		**in**	**mm**	**in**	**mm**
Rough Opening	Frame Size	+ 1	(25)	+ 1/2	(13)
Masonry Opening w/BMC	Frame Size	-3 1/8	(79)	-1 9/16	(40)
Glass		**in**	**mm**	**in**	**mm**
Daylight Opening	Glass	+ 1 1/16	(27)	+ 1 1/16	(27)

Section Details: Operating

Scale: 3" = 1' 0"

Double Hung

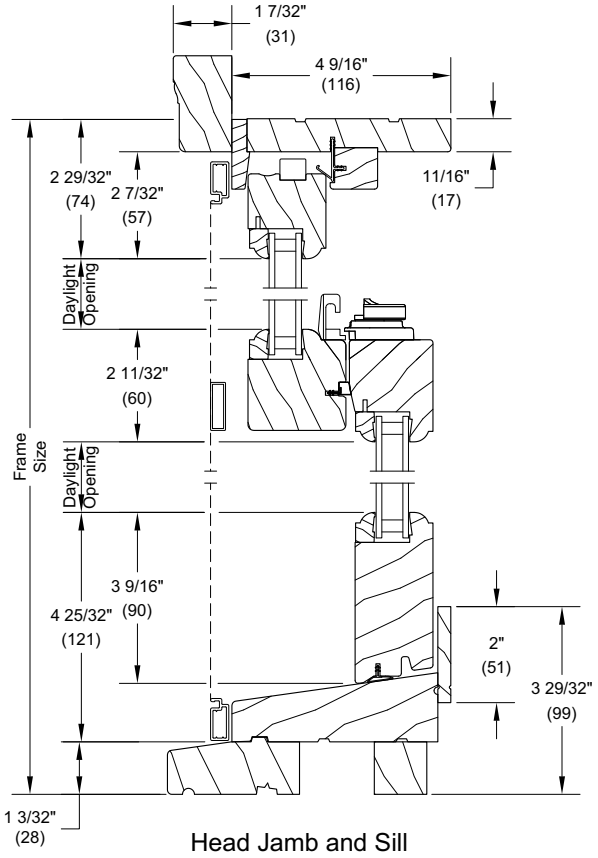

Head Jamb and Sill

Single Hung

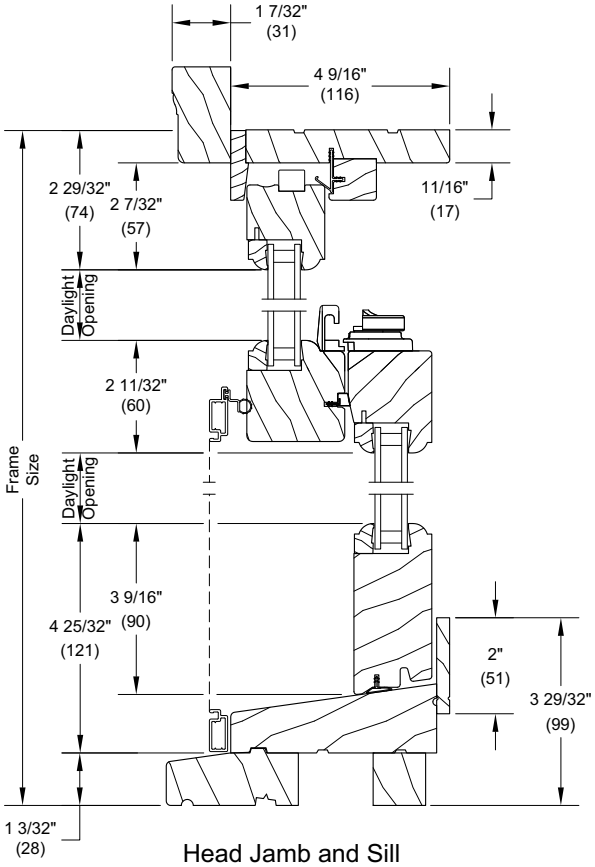

Head Jamb and Sill

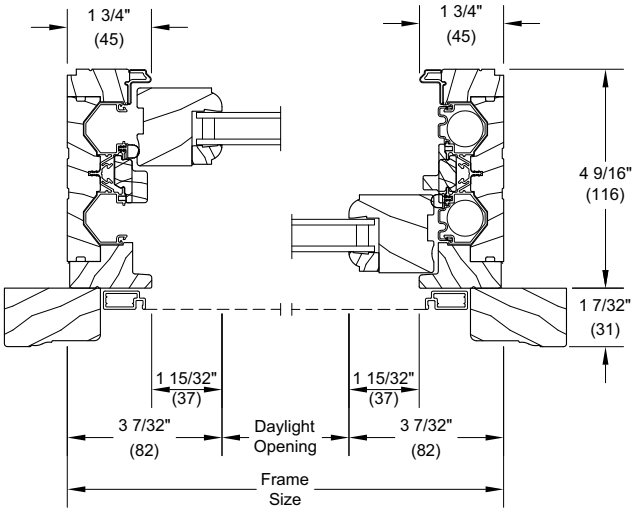

Jambs

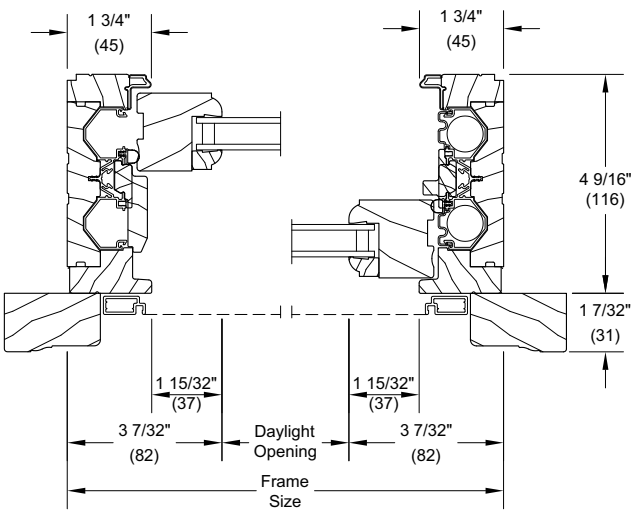

Jambs

Section Details: Transom

Scale: 3" = 1' 0"

Transom

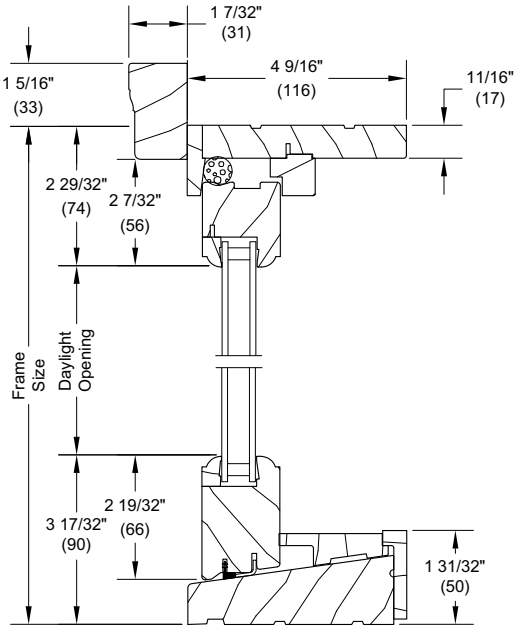

Head Jamb and Sill

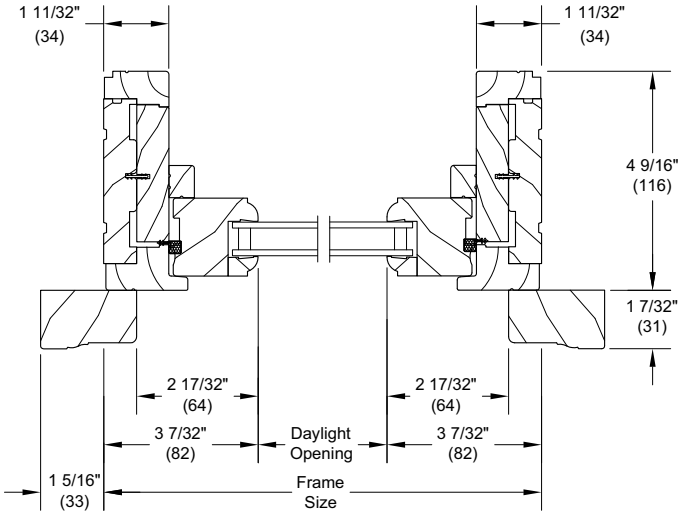

Jamb

Section Details: Picture

Scale: 3" = 1' 0"

1 5/8" - Picture

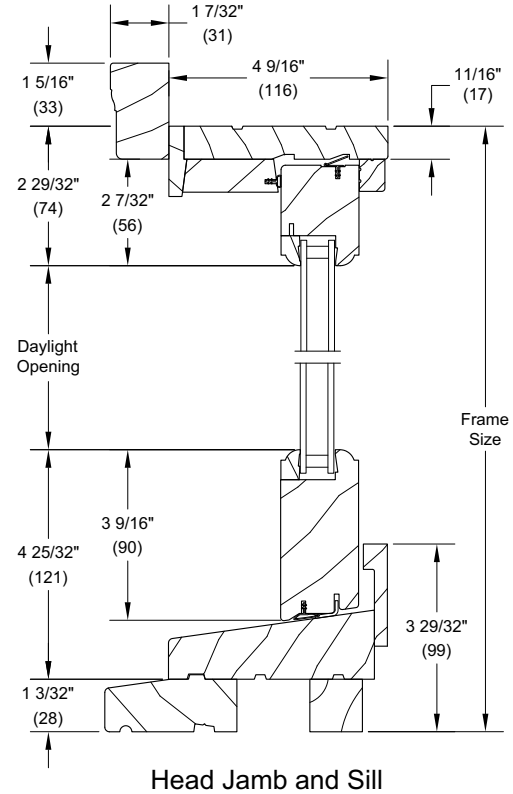

Head Jamb and Sill

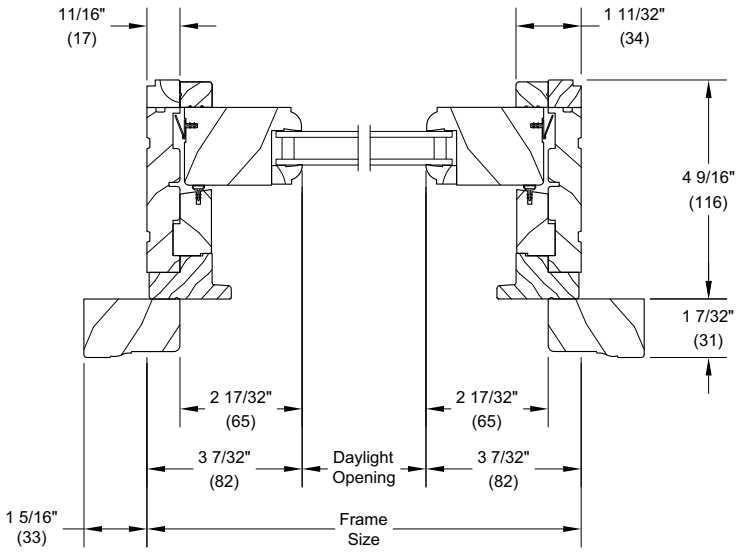

Jamb Detail

2" Picture

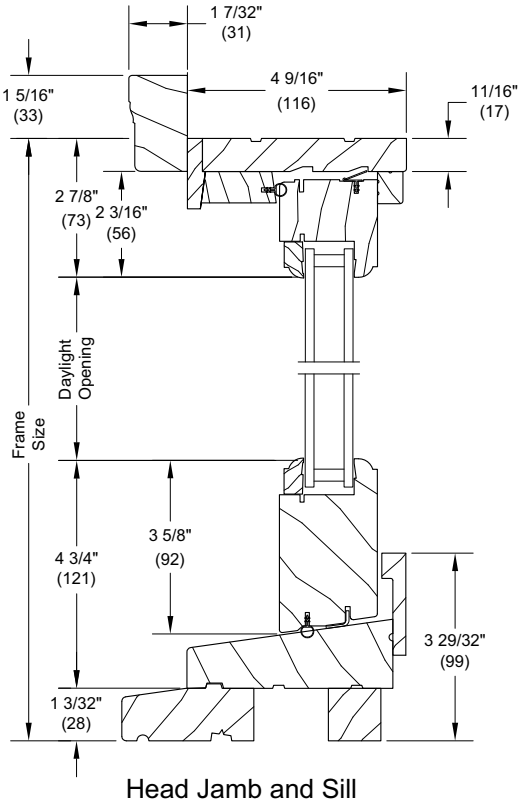

Head Jamb and Sill

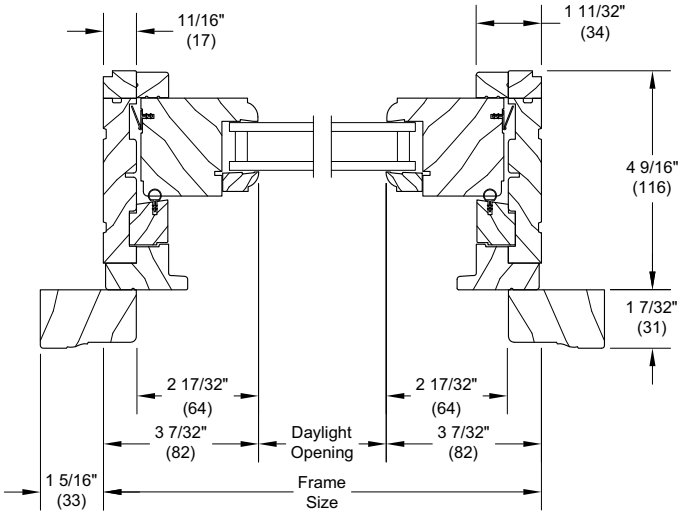

Jambs

Section Details: Combination and Storm Sash

Scale: 3" = 1' 0"

Combination

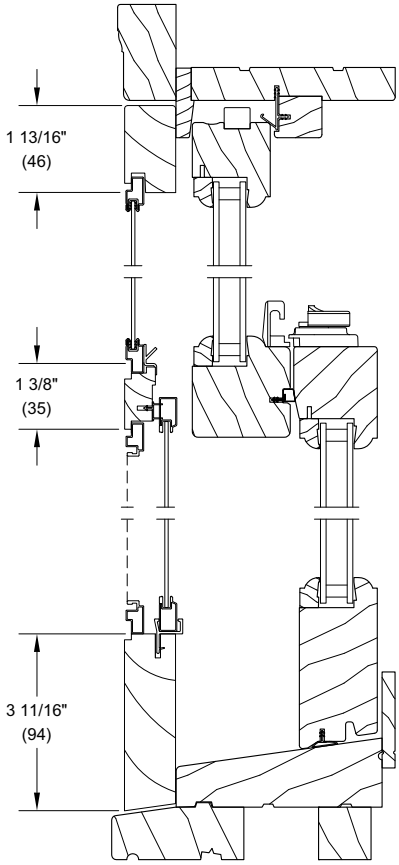

Head Jamb and Sill

Storm Sash

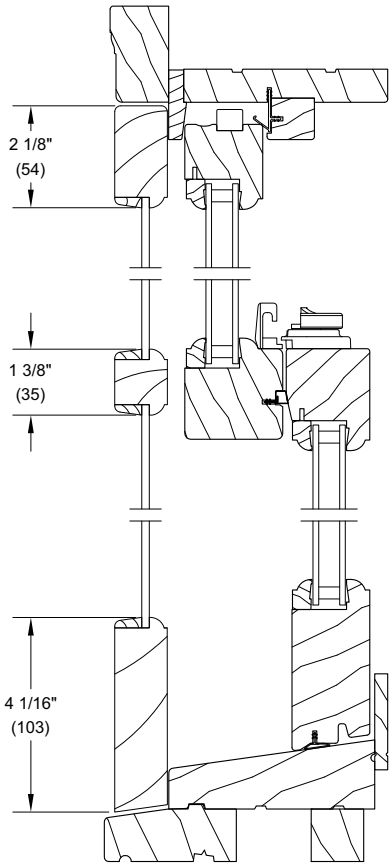

Head Jamb and Sill

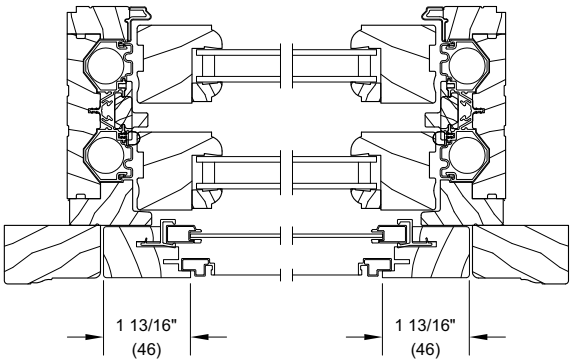

Jambs

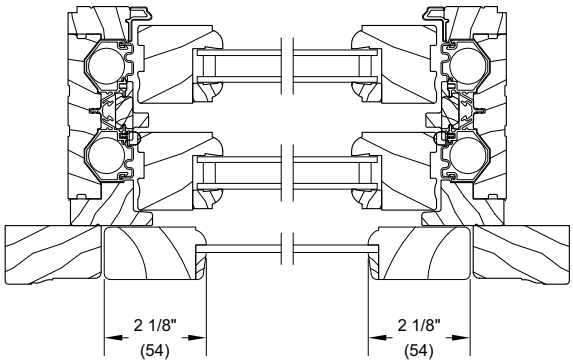

Jambs

Section Details: Mullions

Scale: 3" - 1' 0"

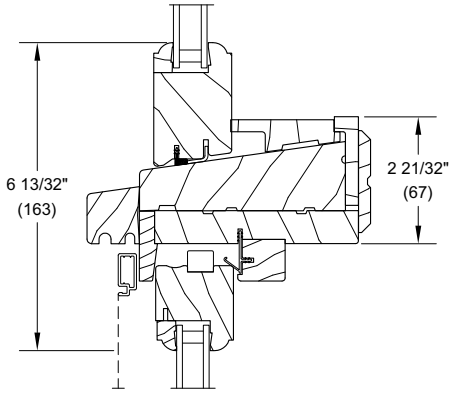

Horizontal Mullion
Transom/Operator

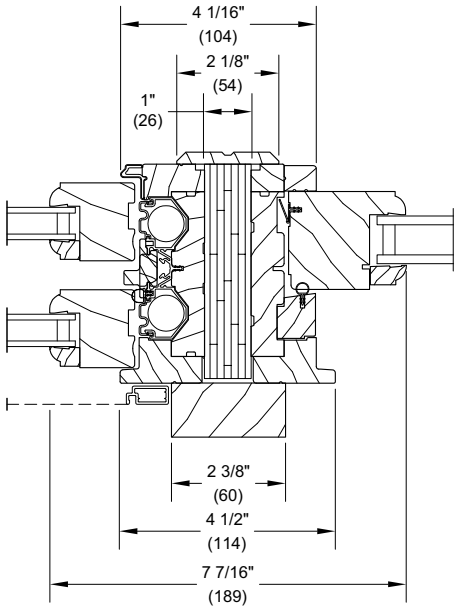

Vertical Mullion
Operator/Picture

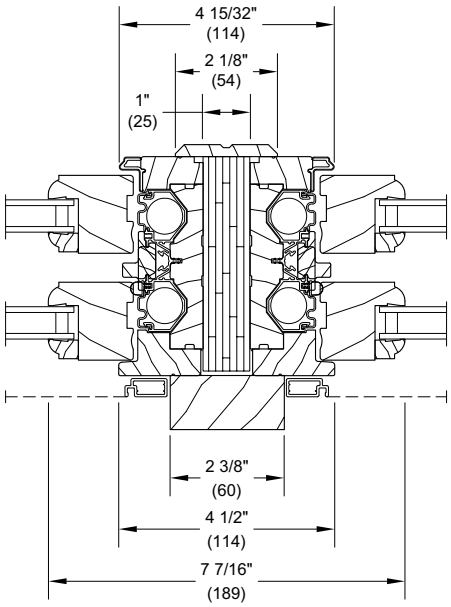

Vertical Mullion
Solid Space Mull

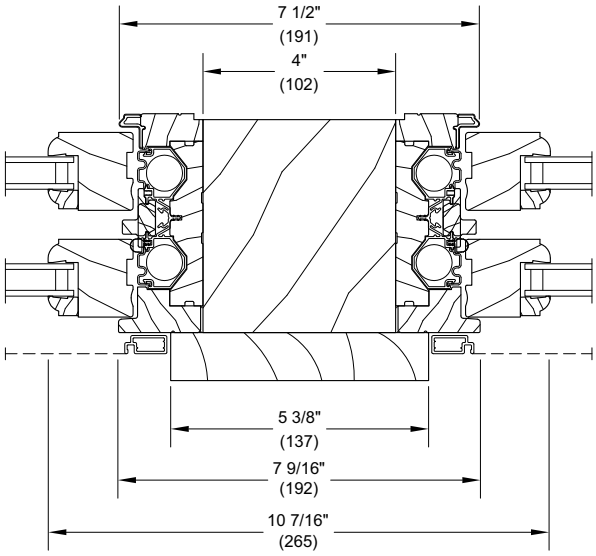

Vertical Mullion
Operator with 4" Solid Space Mull