Wood Ultimate Double Hung

Unit Features 1
Egress and Vent Openings: Standard Sill 2
Egress and Vent Openings: High Performance Sill Liner 4
Daylight Measurements: Double Hung 6
Daylight Measurements: Transom and Pictures 7
Minimum and Maximum Guidelines, Certified Sizes and Ratings: Double Hung Units 8
Impact Zone 3 - Minimum and Maximum Guidelines, Certified Sizes and Ratings 9
Measurement Conversions 11
Standard Unit Measurements: Double Hung 13
Standard Unit Measurements: Transom/Picture 14
Section Details: Operating 15
Section Details: 1 5/8" Transom/Picture 16
Section Details: 2" Transom/Picture 17
Section Details: Operating Impact Zone 3 18
Section Details: Picture Impact Zone 3 19
Section Details: Combination/Storm Sash 20
Section Details: Mullions 21

Unit Features

Wood Ultimate Double Hung: WUDH

Wood Ultimate Double Hung Transom: WUDHT

Wood Ultimate Double Hung Picture: WUDHP

Operating Hardware:

- Sash lock and keeper: Open style crescent cam lock with sash release lever, surface mounted. Color: Satin Taupe.
  - Optional Colors: White, Brass, Satin chrome, Antique Brass, Bronze, Oil Rubbed Bronze, Satin Nickel.
- Balance System: Block and tackle balance system.
- Optional Sash lift: same colors as offered in locks.
- Optional window opening control device field applied.

Optional Glass:

- 1" Tri-pane LoĒ-180™ outer piece and LoĒ-180™ inner piece with Argon
- 1" Tri-pane LoĒ-180™ outer piece and LoĒ-180™ inner piece with Krypton/Argon
- 1" Tri-pane LoĒ²272® outer piece and LoĒ²272® inner piece with Argon
- 1" Tri-pane LoĒ²272® outer piece and LoĒ²272® inner piece with Krypton/Argon
- 1" Tri-pane LoĒ 366® outer piece and LoĒ-180™ inner piece with Argon
- 1" Tri-pane LoĒ 366® outer piece and LoĒ-180™ inner piece with Krypton/Argon

Egress and Vent Openings: Standard Sill

CN	Opening Width		Opening Height Std. Sill Liner		Egress Opening	
	ft - in	mm	ft - in	mm	ft^2	m^2
1612	1-5 7/8	(454)	0-10 1/8	(257)	1.26	(0.12)
1614	1-5 7/8	(454)	1-0 1/8	(308)	1.51	(0.14)
1616	1-5 7/8	(454)	1-2 1/8	(359)	1.75	(0.16)
1618	1-5 7/8	(454)	1-4 1/8	(410)	2.00	(0.19)
1620	1-5 7/8	(454)	1-6 1/8	(461)	2.25	(0.21)
1622	1-5 7/8	(454)	1-8 1/8	(511)	2.50	(0.23)
1624	1-5 7/8	(454)	1-10 1/8	(562)	2.75	(0.26)
1626	1-5 7/8	(454)	2-0 1/8	(613)	2.99	(0.28)
1628	1-5 7/8	(454)	2-2 1/8	(664)	3.24	(0.30)
1630	1-5 7/8	(454)	2-4 1/8	(715)	3.49	(0.32)
1632	1-5 7/8	(454)	2-6 1/8	(765)	3.74	(0.35)
1634	1-5 7/8	(454)	2-8 1/8	(816)	3.99	(0.37)
1636	1-5 7/8	(454)	2-10 1/8	(867)	4.24	(0.39)
1640	1-5 7/8	(454)	3-2 1/8	(969)	4.73	(0.44)
1642	1-5 7/8	(454)	3-4 1/8	(1019)	4.98	(0.46)
2012	1-9 7/8	(555)	0-10 1/8	(257)	1.54	(0.14)
2014	1-9 7/8	(555)	1-0 1/8	(308)	1.84	(0.17)
2016	1-9 7/8	(555)	1-2 1/8	(359)	2.15	(0.20)
2018	1-9 7/8	(555)	1-4 1/8	(410)	2.45	(0.23)
2020	1-9 7/8	(555)	1-6 1/8	(461)	2.75	(0.26)
2022	1-9 7/8	(555)	1-8 1/8	(511)	3.06	(0.28)
2024	1-9 7/8	(555)	1-10 1/8	(562)	3.36	(0.31)
2026	1-9 7/8	(555)	2-0 1/8	(613)	3.67	(0.34)
2028	1-9 7/8	(555)	2-2 1/8	(664)	3.97	(0.37)
2030	1-9 7/8	(555)	2-4 1/8	(715)	4.27	(0.40)
2032	1-9 7/8	(555)	2-6 1/8	(765)	4.58	(0.43)
2034	1-9 7/8	(555)	2-8 1/8	(816)	4.88	(0.45)
2036	1-9 7/8	(555)	2-10 1/8	(867)	5.18	(0.48)
2040 E	1-9 7/8	(555)	3-2 1/8	(969)	5.79	(0.54)
2042 E	1-9 7/8	(555)	3-4 1/8	(1019)	6.09	(0.57)
2412	2-1 7/8	(657)	0-10 1/8	(257)	1.82	(0.17)
2414	2-1 7/8	(657)	1-0 1/8	(308)	2.18	(0.20)
2416	2-1 7/8	(657)	1-2 1/8	(359)	2.54	(0.24)
2418	2-1 7/8	(657)	1-4 1/8	(410)	2.90	(0.27)
2420	2-1 7/8	(657)	1-6 1/8	(461)	3.26	(0.30)
2422	2-1 7/8	(657)	1-8 1/8	(511)	3.62	(0.34)
2424	2-1 7/8	(657)	1-10 1/8	(562)	3.98	(0.37)
2426	2-1 7/8	(657)	2-0 1/8	(613)	4.34	(0.40)
2428	2-1 7/8	(657)	2-2 1/8	(664)	4.69	(0.44)
2430	2-1 7/8	(657)	2-4 1/8	(715)	5.05	(0.47)
2432	2-1 7/8	(657)	2-6 1/8	(765)	5.41	(0.50)
2434 E	2-1 7/8	(657)	2-8 1/8	(816)	5.77	(0.54)
2436 E	2-1 7/8	(657)	2-10 1/8	(867)	6.13	(0.57)
2440 E	2-1 7/8	(657)	3-2 1/8	(969)	6.85	(0.64)
2442 E	2-1 7/8	(657)	3-4 1/8	(1019)	7.21	(0.67)

CN	Opening Width		Opening Height Std. Sill Liner		Egress Opening	
	ft - in	mm	ft - in	mm	ft^2	m^2
2612	2-3 7/8	(708)	0-10 1/8	(257)	1.96	(0.18)
2614	2-3 7/8	(708)	1-0 1/8	(308)	2.35	(0.22)
2616	2-3 7/8	(708)	1-2 1/8	(359)	2.74	(0.25)
2618	2-3 7/8	(708)	1-4 1/8	(410)	3.12	(0.29)
2620	2-3 7/8	(708)	1-6 1/8	(461)	3.51	(0.33)
2622	2-3 7/8	(708)	1-8 1/8	(511)	3.90	(0.36)
2624	2-3 7/8	(708)	1-10 1/8	(562)	4.28	(0.40)
2626	2-3 7/8	(708)	2-0 1/8	(613)	4.67	(0.43)
2628	2-3 7/8	(708)	2-2 1/8	(664)	5.06	(0.47)
2630	2-3 7/8	(708)	2-4 1/8	(715)	5.44	(0.51)
2632 E	2-3 7/8	(708)	2-6 1/8	(765)	5.83	(0.54)
2634 E	2-3 7/8	(708)	2-8 1/8	(816)	6.22	(0.58)
2636 E	2-3 7/8	(708)	2-10 1/8	(867)	6.61	(0.61)
2640 E	2-3 7/8	(708)	3-2 1/8	(969)	7.38	(0.69)
2642 E	2-3 7/8	(708)	3-4 1/8	(1019)	7.77	(0.72)
2812	2-5 7/8	(759)	0-10 1/8	(257)	2.10	(0.20)
2814	2-5 7/8	(759)	1-0 1/8	(308)	2.52	(0.23)
2816	2-5 7/8	(759)	1-2 1/8	(359)	2.93	(0.27)
2818	2-5 7/8	(759)	1-4 1/8	(410)	3.35	(0.31)
2820	2-5 7/8	(759)	1-6 1/8	(461)	3.76	(0.35)
2822	2-5 7/8	(759)	1-8 1/8	(511)	4.18	(0.39)
2824	2-5 7/8	(759)	1-10 1/8	(562)	4.59	(0.43)
2826	2-5 7/8	(759)	2-0 1/8	(613)	5.01	(0.47)
2828	2-5 7/8	(759)	2-2 1/8	(664)	5.42	(0.50)
2830 E	2-5 7/8	(759)	2-4 1/8	(715)	5.84	(0.54)
2832 E	2-5 7/8	(759)	2-6 1/8	(765)	6.25	(0.58)
2834 E	2-5 7/8	(759)	2-8 1/8	(816)	6.67	(0.62)
2836 E	2-5 7/8	(759)	2-10 1/8	(867)	7.08	(0.66)
2840 E	2-5 7/8	(759)	3-2 1/8	(969)	7.91	(0.73)
2842 E	2-5 7/8	(759)	3-4 1/8	(1019)	8.32	(0.77)
3012	2-7 7/8	(809)	0-10 1/8	(257)	2.24	(0.21)
3014	2-7 7/8	(809)	1-0 1/8	(308)	2.69	(0.25)
3016	2-7 7/8	(809)	1-2 1/8	(359)	3.13	(0.29)
3018	2-7 7/8	(809)	1-4 1/8	(410)	3.57	(0.33)
3020	2-7 7/8	(809)	1-6 1/8	(461)	4.01	(0.37)
3022	2-7 7/8	(809)	1-8 1/8	(511)	4.46	(0.41)
3024	2-7 7/8	(809)	1-10 1/8	(562)	4.90	(0.46)
3026	2-7 7/8	(809)	2-0 1/8	(613)	5.34	(0.50)
3028 E	2-7 7/8	(809)	2-2 1/8	(664)	5.78	(0.54)
3030 E	2-7 7/8	(809)	2-4 1/8	(715)	6.23	(0.58)
3032 E	2-7 7/8	(809)	2-6 1/8	(765)	6.67	(0.62)
3034 E	2-7 7/8	(809)	2-8 1/8	(816)	7.11	(0.66)
3036 E	2-7 7/8	(809)	2-10 1/8	(867)	7.55	(0.70)
3040 E	2-7 7/8	(809)	3-2 1/8	(969)	8.44	(0.78)
3042 E	2-7 7/8	(809)	3-4 1/8	(1019)	8.88	(0.83)

NOTE: Refer to Product Performance Chapter for International Building Code. Net Clear Opening drawings are pictured with the conversion tables.

Egress and Vent Openings: Standard Sill Liner

CN		Opening Width		Opening Height Std. Sill Liner		Egress Opening	
		ft - in	mm	ft - in	mm	ft^2	m^2
3212		2-9 7/8	(860)	0-10 1/8	(257)	2.38	(0.22)
3214		2-9 7/8	(860)	1-0 1/8	(308)	2.85	(0.27)
3216		2-9 7/8	(860)	1-2 1/8	(359)	3.32	(0.31)
3218		2-9 7/8	(860)	1-4 1/8	(410)	3.79	(0.35)
3220		2-9 7/8	(860)	1-6 1/8	(461)	4.27	(0.40)
3222		2-9 7/8	(860)	1-8 1/8	(511)	4.74	(0.44)
3224		2-9 7/8	(860)	1-10 1/8	(562)	5.21	(0.48)
3226		2-9 7/8	(860)	2-0 1/8	(613)	5.68	(0.53)
3228	E	2-9 7/8	(860)	2-2 1/8	(664)	6.15	(0.57)
3230	E	2-9 7/8	(860)	2-4 1/8	(715)	6.62	(0.61)
3232	E	2-9 7/8	(860)	2-6 1/8	(765)	7.09	(0.66)
3234	E	2-9 7/8	(860)	2-8 1/8	(816)	7.56	(0.70)
3236	E	2-9 7/8	(860)	2-10 1/8	(867)	8.03	(0.75)
3240	E	2-9 7/8	(860)	3-2 1/8	(969)	8.97	(0.83)
3242	E	2-9 7/8	(860)	3-4 1/8	(1019)	9.44	(0.88)
3612		3-1 7/8	(962)	0-10 1/8	(257)	2.67	(0.25)
3614		3-1 7/8	(962)	1-0 1/8	(308)	3.19	(0.30)
3616		3-1 7/8	(962)	1-2 1/8	(359)	3.72	(0.35)
3618		3-1 7/8	(962)	1-4 1/8	(410)	4.24	(0.39)
3620		3-1 7/8	(962)	1-6 1/8	(461)	4.77	(0.44)
3622		3-1 7/8	(962)	1-8 1/8	(511)	5.30	(0.49)
3624		3-1 7/8	(962)	1-10 1/8	(562)	5.82	(0.54)
3626	E	3-1 7/8	(962)	2-0 1/8	(613)	6.35	(0.59)
3628	E	3-1 7/8	(962)	2-2 1/8	(664)	6.87	(0.64)
3630	E	3-1 7/8	(962)	2-4 1/8	(715)	7.40	(0.69)
3632	E	3-1 7/8	(962)	2-6 1/8	(765)	7.92	(0.74)
3634	E	3-1 7/8	(962)	2-8 1/8	(816)	8.45	(0.79)
3636	E	3-1 7/8	(962)	2-10 1/8	(867)	8.98	(0.83)
3640	E	3-1 7/8	(962)	3-2 1/8	(969)	10.03	(0.93)
3642	E	3-1 7/8	(962)	3-4 1/8	(1019)	10.55	(0.98)
4012		3-5 7/8	(1063)	0-10 1/8	(257)	2.95	(0.27)
4014		3-5 7/8	(1063)	1-0 1/8	(308)	3.53	(0.33)
4016		3-5 7/8	(1063)	1-2 1/8	(359)	4.11	(0.38)
4018		3-5 7/8	(1063)	1-4 1/8	(410)	4.69	(0.44)
4020		3-5 7/8	(1063)	1-6 1/8	(461)	5.27	(0.49)
4022		3-5 7/8	(1063)	1-8 1/8	(511)	5.85	(0.54)
4024		3-5 7/8	(1063)	1-10 1/8	(562)	6.44	(0.60)
4026	E	3-5 7/8	(1063)	2-0 1/8	(613)	7.02	(0.65)
4028	E	3-5 7/8	(1063)	2-2 1/8	(664)	7.60	(0.71)
4030	E	3-5 7/8	(1063)	2-4 1/8	(715)	8.18	(0.76)
4032	E	3-5 7/8	(1063)	2-6 1/8	(765)	8.76	(0.81)
4034	E	3-5 7/8	(1063)	2-8 1/8	(816)	9.34	(0.87)
4036	E	3-5 7/8	(1063)	2-10 1/8	(867)	9.92	(0.92)

NOTE: Refer to Product Performance Chapter for International Building Code. Net Clear Opening drawings are pictured with the conversion tables.

Egress and Vent Openings: High Performance Sill Liner

CN	Opening Width		Opening Height HP Sill Liner		Egress Opening	
	ft - in	mm	ft - in	mm	ft^2	m^2
1612	1-5 7/8	(454)	0-9 1/4	(235)	1.15	(0.11)
1614	1-5 7/8	(454)	0-11 1/4	(286)	1.40	(0.13)
1616	1-5 7/8	(454)	1-1 1/4	(337)	1.65	(0.15)
1618	1-5 7/8	(454)	1-3 1/4	(388)	1.89	(0.18)
1620	1-5 7/8	(454)	1-5 1/4	(438)	2.14	(0.20)
1622	1-5 7/8	(454)	1-7 1/4	(489)	2.39	(0.22)
1624	1-5 7/8	(454)	1-9 1/4	(540)	2.64	(0.25)
1626	1-5 7/8	(454)	1-11 1/4	(591)	2.89	(0.27)
1628	1-5 7/8	(454)	2-1 1/4	(642)	3.13	(0.29)
1630	1-5 7/8	(454)	2-3 1/4	(692)	3.38	(0.31)
1632	1-5 7/8	(454)	2-5 1/4	(743)	3.63	(0.34)
1634	1-5 7/8	(454)	2-7 1/4	(794)	3.88	(0.36)
1636	1-5 7/8	(454)	2-9 1/4	(845)	4.13	(0.38)
1640	1-5 7/8	(454)	3-1 1/4	(946)	4.62	(0.43)
1642	1-5 7/8	(454)	3-3 1/4	(997)	4.87	(0.45)
2012	1-9 7/8	(555)	0-9 1/4	(235)	1.41	(0.13)
2014	1-9 7/8	(555)	0-11 1/4	(286)	1.71	(0.16)
2016	1-9 7/8	(555)	1-1 1/4	(337)	2.01	(0.19)
2018	1-9 7/8	(555)	1-3 1/4	(388)	2.32	(0.22)
2020	1-9 7/8	(555)	1-5 1/4	(438)	2.62	(0.24)
2022	1-9 7/8	(555)	1-7 1/4	(489)	2.92	(0.27)
2024	1-9 7/8	(555)	1-9 1/4	(540)	3.23	(0.30)
2026	1-9 7/8	(555)	1-11 1/4	(591)	3.53	(0.33)
2028	1-9 7/8	(555)	2-1 1/4	(642)	3.84	(0.36)
2030	1-9 7/8	(555)	2-3 1/4	(692)	4.14	(0.38)
2032	1-9 7/8	(555)	2-5 1/4	(743)	4.44	(0.41)
2034	1-9 7/8	(555)	2-7 1/4	(794)	4.75	(0.44)
2036	1-9 7/8	(555)	2-9 1/4	(845)	5.05	(0.47)
2040	1-9 7/8	(555)	3-1 1/4	(946)	5.66	(0.53)
2042 E	1-9 7/8	(555)	3-3 1/4	(997)	5.96	(0.55)
2412	2-1 7/8	(657)	0-9 1/4	(235)	1.66	(0.15)
2414	2-1 7/8	(657)	0-11 1/4	(286)	2.02	(0.19)
2416	2-1 7/8	(657)	1-1 1/4	(337)	2.38	(0.22)
2418	2-1 7/8	(657)	1-3 1/4	(388)	2.74	(0.25)
2420	2-1 7/8	(657)	1-5 1/4	(438)	3.10	(0.29)
2422	2-1 7/8	(657)	1-7 1/4	(489)	3.46	(0.32)
2424	2-1 7/8	(657)	1-9 1/4	(540)	3.82	(0.35)
2426	2-1 7/8	(657)	1-11 1/4	(591)	4.18	(0.39)
2428	2-1 7/8	(657)	2-1 1/4	(642)	4.54	(0.42)
2430	2-1 7/8	(657)	2-3 1/4	(692)	4.90	(0.45)
2432	2-1 7/8	(657)	2-5 1/4	(743)	5.26	(0.49)
2434	2-1 7/8	(657)	2-7 1/4	(794)	5.62	(0.52)
2436 E	2-1 7/8	(657)	2-9 1/4	(845)	5.97	(0.56)
2440 E	2-1 7/8	(657)	3-1 1/4	(946)	6.69	(0.62)
2442 E	2-1 7/8	(657)	3-3 1/4	(997)	7.05	(0.66)

CN	Opening Width		Opening Height HP Sill Liner		Egress Opening	
	ft - in	mm	ft - in	mm	ft^2	m^2
2612	2-3 7/8	(708)	0-9 1/4	(235)	1.79	(0.17)
2614	2-3 7/8	(708)	0-11 1/4	(286)	2.18	(0.20)
2616	2-3 7/8	(708)	1-1 1/4	(337)	2.57	(0.24)
2618	2-3 7/8	(708)	1-3 1/4	(388)	2.95	(0.27)
2620	2-3 7/8	(708)	1-5 1/4	(438)	3.34	(0.31)
2622	2-3 7/8	(708)	1-7 1/4	(489)	3.73	(0.35)
2624	2-3 7/8	(708)	1-9 1/4	(540)	4.11	(0.38)
2626	2-3 7/8	(708)	1-11 1/4	(591)	4.50	(0.42)
2628	2-3 7/8	(708)	2-1 1/4	(642)	4.89	(0.45)
2630	2-3 7/8	(708)	2-3 1/4	(692)	5.28	(0.49)
2632	2-3 7/8	(708)	2-5 1/4	(743)	5.66	(0.53)
2634 E	2-3 7/8	(708)	2-7 1/4	(794)	6.05	(0.56)
2636 E	2-3 7/8	(708)	2-9 1/4	(845)	6.44	(0.60)
2640 E	2-3 7/8	(708)	3-1 1/4	(946)	7.21	(0.67)
2642 E	2-3 7/8	(708)	3-3 1/4	(997)	7.60	(0.71)
2812	2-5 7/8	(759)	0-9 1/4	(235)	1.92	(0.18)
2814	2-5 7/8	(759)	0-11 1/4	(286)	2.34	(0.22)
2816	2-5 7/8	(759)	1-1 1/4	(337)	2.75	(0.26)
2818	2-5 7/8	(759)	1-3 1/4	(388)	3.17	(0.29)
2820	2-5 7/8	(759)	1-5 1/4	(438)	3.58	(0.33)
2822	2-5 7/8	(759)	1-7 1/4	(489)	3.99	(0.37)
2824	2-5 7/8	(759)	1-9 1/4	(540)	4.41	(0.41)
2826	2-5 7/8	(759)	1-11 1/4	(591)	4.82	(0.45)
2828	2-5 7/8	(759)	2-1 1/4	(642)	5.24	(0.49)
2830	2-5 7/8	(759)	2-3 1/4	(692)	5.65	(0.53)
2832 E	2-5 7/8	(759)	2-5 1/4	(743)	6.07	(0.56)
2834 E	2-5 7/8	(759)	2-7 1/4	(794)	6.48	(0.60)
2836 E	2-5 7/8	(759)	2-9 1/4	(845)	6.90	(0.64)
2840 E	2-5 7/8	(759)	3-1 1/4	(946)	7.73	(0.72)
2842 E	2-5 7/8	(759)	3-3 1/4	(997)	8.14	(0.76)
3012	2-7 7/8	(809)	0-9 1/4	(235)	2.05	(0.19)
3014	2-7 7/8	(809)	0-11 1/4	(286)	2.49	(0.23)
3016	2-7 7/8	(809)	1-1 1/4	(337)	2.93	(0.27)
3018	2-7 7/8	(809)	1-3 1/4	(388)	3.38	(0.31)
3020	2-7 7/8	(809)	1-5 1/4	(438)	3.82	(0.35)
3022	2-7 7/8	(809)	1-7 1/4	(489)	4.26	(0.40)
3024	2-7 7/8	(809)	1-9 1/4	(540)	4.70	(0.44)
3026	2-7 7/8	(809)	1-11 1/4	(591)	5.15	(0.48)
3028	2-7 7/8	(809)	2-1 1/4	(642)	5.59	(0.52)
3030 E	2-7 7/8	(809)	2-3 1/4	(692)	6.03	(0.56)
3032 E	2-7 7/8	(809)	2-5 1/4	(743)	6.48	(0.60)
3034 E	2-7 7/8	(809)	2-7 1/4	(794)	6.92	(0.64)
3036 E	2-7 7/8	(809)	2-9 1/4	(845)	7.36	(0.68)
3040 E	2-7 7/8	(809)	3-1 1/4	(946)	8.25	(0.77)
3042 E	2-7 7/8	(809)	3-3 1/4	(997)	8.69	(0.81)

NOTE: Refer to Product Performance Chapter for International Building Code. Net Clear Opening drawings are pictured with the conversion tables.

Egress and Vent Openings: High Performance Sill Liner

CN		Opening Width		Opening Height HP Sill Liner		Egress Opening	
		ft - in	mm	ft - in	mm	ft^2	m^2
3212		2-9 7/8	(860)	0-9 1/4	(235)	2.18	(0.20)
3214		2-9 7/8	(860)	0-11 1/4	(286)	2.65	(0.25)
3216		2-9 7/8	(860)	1-1 1/4	(337)	3.12	(0.29)
3218		2-9 7/8	(860)	1-3 1/4	(388)	3.59	(0.33)
3220		2-9 7/8	(860)	1-5 1/4	(438)	4.06	(0.38)
3222		2-9 7/8	(860)	1-7 1/4	(489)	4.53	(0.42)
3224		2-9 7/8	(860)	1-9 1/4	(540)	5.00	(0.46)
3226		2-9 7/8	(860)	1-11 1/4	(591)	5.47	(0.51)
3228	E	2-9 7/8	(860)	2-1 1/4	(642)	5.94	(0.55)
3230	E	2-9 7/8	(860)	2-3 1/4	(692)	6.41	(0.60)
3232	E	2-9 7/8	(860)	2-5 1/4	(743)	6.88	(0.64)
3234	E	2-9 7/8	(860)	2-7 1/4	(794)	7.35	(0.68)
3236	E	2-9 7/8	(860)	2-9 1/4	(845)	7.82	(0.73)
3240	E	2-9 7/8	(860)	3-1 1/4	(946)	8.76	(0.81)
3242	E	2-9 7/8	(860)	3-3 1/4	(997)	9.23	(0.86)
3612		3-1 7/8	(962)	0-9 1/4	(235)	2.44	(0.23)
3614		3-1 7/8	(962)	0-11 1/4	(286)	2.96	(0.28)
3616		3-1 7/8	(962)	1-1 1/4	(337)	3.49	(0.32)
3618		3-1 7/8	(962)	1-3 1/4	(388)	4.01	(0.37)
3620		3-1 7/8	(962)	1-5 1/4	(438)	4.54	(0.42)
3622		3-1 7/8	(962)	1-7 1/4	(489)	5.06	(0.47)
3624		3-1 7/8	(962)	1-9 1/4	(540)	5.59	(0.52)
3626		3-1 7/8	(962)	1-11 1/4	(591)	6.12	(0.57)
3628	E	3-1 7/8	(962)	2-1 1/4	(642)	6.64	(0.62)
3630	E	3-1 7/8	(962)	2-3 1/4	(692)	7.17	(0.67)
3632	E	3-1 7/8	(962)	2-5 1/4	(743)	7.69	(0.71)
3634	E	3-1 7/8	(962)	2-7 1/4	(794)	8.22	(0.76)
3636	E	3-1 7/8	(962)	2-9 1/4	(845)	8.75	(0.81)
3640	E	3-1 7/8	(962)	3-1 1/4	(946)	9.80	(0.91)
3642	E	3-1 7/8	(962)	3-3 1/4	(997)	10.32	(0.96)
4012		3-5 7/8	(1063)	0-9 1/4	(235)	2.69	(0.25)
4014		3-5 7/8	(1063)	0-11 1/4	(286)	3.27	(0.30)
4016		3-5 7/8	(1063)	1-1 1/4	(337)	3.86	(0.36)
4018		3-5 7/8	(1063)	1-3 1/4	(388)	4.44	(0.41)
4020		3-5 7/8	(1063)	1-5 1/4	(438)	5.02	(0.47)
4022		3-5 7/8	(1063)	1-7 1/4	(489)	5.60	(0.52)
4024		3-5 7/8	(1063)	1-9 1/4	(540)	6.18	(0.57)
4026		3-5 7/8	(1063)	1-11 1/4	(591)	6.76	(0.63)
4028	E	3-5 7/8	(1063)	2-1 1/4	(642)	7.34	(0.68)
4030	E	3-5 7/8	(1063)	2-3 1/4	(692)	7.93	(0.74)
4032	E	3-5 7/8	(1063)	2-5 1/4	(743)	8.51	(0.79)
4034	E	3-5 7/8	(1063)	2-7 1/4	(794)	9.09	(0.84)
4036	E	3-5 7/8	(1063)	2-9 1/4	(845)	9.67	(0.90)

NOTE: Refer to Product Performance Chapter for International Building Code. Net Clear Opening drawings are pictured with the conversion tables.

Daylight Measurements: Double Hung

Wood Ultimate Double Hung Daylight Measurements			Width									
		CN	16		20		24		26		28	
		DLO	1-2 15/16	(379)	1-6 15/16	(481)	1-10 15/16	(583)	2-0 15/16	(633)	2-2 15/16	(684)
CN	DLO Height		Square Feet (Square Meters)									
12	0-10 15/16	(278)	1.13	(0.11)	1.44	(0.13)	1.74	(0.16)	1.89	(0.18)	2.05	(0.19)
14	1-0 15/16	(329)	1.34	(0.12)	1.70	(0.16)	2.06	(0.19)	2.24	(0.21)	2.42	(0.22)
16	1-2 15/16	(379)	1.55	(0.14)	1.96	(0.18)	2.38	(0.22)	2.59	(0.24)	2.79	(0.26)
18	1-4 15/16	(430)	1.76	(0.16)	2.23	(0.21)	2.70	(0.25)	2.93	(0.27)	3.17	(0.29)
20	1-6 15/16	(481)	1.96	(0.18)	2.49	(0.23)	3.02	(0.28)	3.28	(0.30)	3.54	(0.33)
22	1-8 15/16	(532)	2.17	(0.20)	2.75	(0.26)	3.33	(0.31)	3.63	(0.34)	3.92	(0.36)
24	1-10 15/16	(583)	2.38	(0.22)	3.02	(0.28)	3.65	(0.34)	3.97	(0.37)	4.29	(0.40)
26	2-0 15/16	(633)	2.59	(0.24)	3.28	(0.30)	3.97	(0.37)	4.32	(0.40)	4.66	(0.43)
28	2-2 15/16	(684)	2.79	(0.26)	3.54	(0.33)	4.29	(0.40)	4.66	(0.43)	5.04	(0.47)
30	2-4 15/16	(735)	3.00	(0.28)	3.81	(0.35)	4.61	(0.43)	5.01	(0.47)	5.41	(0.50)
32	2-6 15/16	(786)	3.21	(0.30)	4.07	(0.38)	4.93	(0.46)	5.36	(0.50)	5.79	(0.54)
34	2-8 15/16	(837)	3.42	(0.32)	4.33	(0.40)	5.25	(0.49)	5.70	(0.53)	6.16	(0.57)
36	2-10 15/16	(887)	3.62	(0.34)	4.59	(0.43)	5.57	(0.52)	6.05	(0.56)	6.54	(0.61)
40	3-2 15/16	(989)	4.04	(0.38)	5.12	(0.48)	6.20	(0.58)	6.74	(0.63)	7.28	(0.68)
42	3-4 15/16	(1040)	4.25	(0.39)	5.38	(0.50)	6.52	(0.61)	7.09	(0.66)	7.66	(0.71)

Wood Ultimate Double Hung Daylight Measurements			Width							
		CN	30		32		36		40	
		DLO	2-4 15/16	(735)	2-6 15/16	(786)	2-10 15/16	(887)	3-2 15/16	(989)
CN	DLO Height		Square Feet (Square Meters)							
12	0-10 15/16	(278)	2.20	(0.20)	2.35	(0.22)	2.65	(0.25)	2.96	(0.27)
14	1-0 15/16	(329)	2.60	(0.24)	2.78	(0.26)	3.14	(0.29)	3.50	(0.32)
16	1-2 15/16	(379)	3.00	(0.28)	3.21	(0.30)	3.62	(0.34)	4.04	(0.38)
18	1-4 15/16	(430)	3.40	(0.32)	3.64	(0.34)	4.11	(0.38)	4.58	(0.43)
20	1-6 15/16	(481)	3.81	(0.35)	4.07	(0.38)	4.59	(0.43)	5.12	(0.48)
22	1-8 15/16	(532)	4.21	(0.39)	4.50	(0.42)	5.08	(0.47)	5.66	(0.53)
24	1-10 15/16	(583)	4.61	(0.43)	4.93	(0.46)	5.56	(0.52)	6.20	(0.58)
26	2-0 15/16	(633)	5.01	(0.47)	5.36	(0.50)	6.05	(0.56)	6.74	(0.63)
28	2-2 15/16	(684)	5.41	(0.50)	5.79	(0.54)	6.54	(0.61)	7.28	(0.68)
30	2-4 15/16	(735)	5.81	(0.54)	6.22	(0.58)	7.02	(0.65)	7.82	(0.73)
32	2-6 15/16	(786)	6.22	(0.58)	6.65	(0.62)	7.51	(0.70)	8.37	(0.78)
34	2-8 15/16	(837)	6.62	(0.61)	7.08	(0.66)	7.99	(0.74)	8.91	(0.83)
36	2-10 15/16	(887)	7.02	(0.65)	7.51	(0.70)	8.48	(0.79)	9.45	(0.88)
40	3-2 15/16	(989)	7.82	(0.73)	8.37	(0.78)	9.45	(0.88)	N/A	
42	3-4 15/16	(1040)	8.23	(0.76)	8.79	(0.82)	9.93	(0.92)	N/A	

Daylight Measurements: Transom and Pictures

Wood Ultimate Double Hung Transom Daylight Measurements		Width						
		CN	16		20		24	
		DLO	1-2 15/16	(379)	1-6 15/16	(481)	1-10 15/16	(583)
CN	DLO Height	Square Feet (Square Meters)						
12	0-10 15/16 (278)		1.13	(0.11)	1.44	(0.13)	1.74	(0.16)
20	1-6 15/16 (481)		1.96	(0.18)	2.49	(0.23)	3.02	(0.28)

Wood Ultimate Double Hung Transom Daylight Measurements		Width						
		CN	26		28		30	
		DLO	2-0 15/16	(633)	2-2 15/16	(684)	2-4 15/16	(735)
CN	DLO Height	Square Feet (Square Meters)						
12	0-10 15/16 (278)		1.89	(0.18)	2.05	(0.19)	2.20	(0.20)
20	1-6 15/16 (481)		3.28	(0.30)	3.54	(0.33)	3.81	(0.35)

Wood Ultimate Double Hung Transom Daylight Measurements		Width						
		CN	32		36		40	
		DLO	2-6 15/16	(786)	2-10 15/16	(887)	3-2 15/16	(989)
CN	DLO Height	Square Feet (Square Meters)						
12	0-10 15/16 (278)		2.35	(0.22)	2.65	(0.25)	2.96	(0.27)
20	1-6 15/16 (481)		4.07	(0.38)	4.59	(0.43)	5.12	(0.48)

Wood Ultimate Double Hung Picture Daylight Measurements		Width										
		CN	40		48		52		60		68	
		DLO	2-10 15/16	(887)	3-6 15/16	(1091)	3-10 15/16	(1192)	4-6 15/16	(1395)	5-2 15/16	(1599)
CN	DLO Height	Square Feet (Square Meters)										
38	2-8 1/4 (819)		7.82	(0.73)	9.62	(0.89)	10.51	(0.98)	12.30	(1.14)	14.10	(1.31)
42	3-0 1/4 (921)		8.80	(0.82)	10.81	(1.00)	11.82	(1.10)	13.83	(1.28)	15.84	(1.47)
46	3-4 1/4 (1022)		9.77	(0.91)	12.00	(1.12)	13.12	(1.22)	15.36	(1.43)	17.59	(1.63)
50	3-8 1/4 (1124)		10.74	(1.00)	13.19	(1.23)	14.42	(1.34)	16.88	(1.57)	19.34	(1.80)
54	4-0 1/4 (1226)		11.71	(1.09)	14.39	(1.34)	15.73	(1.46)	18.41	(1.71)	21.09	(1.96)
58	4-4 1/4 (1327)		12.68	(1.18)	15.58	(1.45)	17.03	(1.58)	19.93	(1.85)	22.84	(2.12)
62	4-8 1/4 (1429)		13.65	(1.27)	16.77	(1.56)	18.34	(1.70)	21.46	(1.99)	24.59	(2.28)
66	5-0 1/4 (1530)		14.62	(1.36)	17.97	(1.67)	19.64	(1.82)	22.99	(2.14)	26.33	(2.45)
70	5-4 1/4 (1632)		15.59	(1.45)	19.16	(1.78)	20.94	(1.95)	24.51	(2.28)	28.08	(2.61)
74	5-8 1/4 (1734)		16.56	(1.54)	20.35	(1.89)	22.25	(2.07)	26.04	(2.42)	29.83	(2.77)
78	6-0 1/4 (1835)		17.53	(1.63)	21.54	(2.00)	23.55	(2.19)	27.56	(2.56)	31.58	(2.93)
86	6-8 1/4 (2038)		19.47	(1.81)	23.93	(2.22)	26.16	(2.43)	30.62	(2.84)	35.07	(3.26)
90	7-0 1/4 (2140)		20.44	(1.90)	25.12	(2.33)	27.46	(2.55)	32.14	(2.99)	36.82	(3.42)

Minimum and Maximum Guidelines, Certified Sizes and Ratings: Double Hung Units

Minimum and Maximum Guidelines - Operable Units													
Unit Type		Min Frame Size					Max Frame Size					Max Glass	
		in	mm	×	in	mm	in	mm	×	in	mm	Sq. Feet	Sq. Meters
WUDH	1/8" (3) e.g. Low E II	13 3/8	(340)	×	25	(635)	45 3/8	(1153)	×	97	(2464)	11	1.022
	3/16" (5) e.g. tint	13 3/8	(340)	×	25	(635)	45 3/8	(1153)	×	97	(2464)	9	0.836

Certified Sizes and Ratings									
Unit Type	Frame Size Height			Frame Size Width					
				CN	in	mm	CN	in	mm
	CN	in	mm	36	41 3/8	(1051)	40	45 3/8	(1153)
WUDH	36	81	(2057)	LC-PG-40-H			LC-PG-40-H		
	-	97	(2464)	LC-PG-40-H			N/A		

Minimum and Maximum Guidelines - Transom Units													
Unit Type		Min Frame Size					Max Frame Size					Max Glass	
		in	mm	×	in	mm	in	mm	×	in	mm	Sq. Feet	Sq. Meters
WUDHT	.70" IG in 1 5/8" (16) Sash	13 3/8	(340)	×	13 3/8	(340)	104	(2642)	×	59 1/2	(1511)	25	2.323

Certified Sizes and Ratings						
Unit Type	Frame Size Height			Frame Size Width		
				CN	in	mm
	CN	in	mm	-	73 3/8	(1864)
WUDHT	-	26 1/2	(673)	LC-PG40-TR		

Minimum and Maximum Guidelines - Picture Unit													
Unit Type		Min Frame Size					Max Frame Size					Max Glass	
		in	mm	×	in	mm	in	mm	×	in	mm	Sq. Feet	Sq. Meters
WUDHP	1" (25) IG in 2" (51) Sash	13 3/8	(340)	×	15 9/16	(395)	120	(3048)	×	120	(3048)	49	4.552

Certified Sizes and Ratings						
Unit Type	Frame Size Height			Frame Size Width		
				CN	in	mm
	CN	in	mm	60	69 3/8	(1762)
WUDHP	54	97	(2464)	CW-PG40-FW		

Impact Zone 3 - Minimum and Maximum Guidelines, Certified Sizes and Ratings

IZ3 Minimum and Maximum Guidelines - Operable Units													
Unit Type		Min Frame Size					Max Frame Size					Max Glass	
		in	mm	×	in	mm	in	mm	×	in	mm	Sq. Feet	Sq. Meters
WUDH	Storm Plus IZ3	20 3/8	(518)	×	25	(635)	44 3/8	(1127)	×	97	(2464)	7 9/16	0.701

IZ3 Certified Sizes and Ratings									
Unit Type	Frame Size Height			Frame Size Width					
				CN	in	mm	CN	in	mm
	CN	in	mm	-	37 3/8	(949)	-	45 3/8	(1153)
WUDH	-	61	(1549)	LC-PG55-H			LC-PG55-H		
WUDH	-	77 1/16	(1957)	LC-PG55-H			N/A		

Impact Glazing Zone 3 (IZ3):

Frame:

- Sealant added at sill liner
- Sill brackets added for bottom sash retention
- Screws through the jamb liner to reinforce the frame

Sash:

- Top check rail has different profile for interlock
- Bottom check rail has profile for interlock
- Painted stainless steel stamped interlock for top sash for sash retention
- Mil finish stainless steel stamped interlock for bottom sash retention
- End plate with over molded stainless steel tilt latch blade
- Long cladding clip screws through it at check rail to reinforce stiles
- Stainless steel tilt pins for sash retention
- Different check rail cladding connector profile for interlock
- Keeper insert to keep lock from disengaging during impact

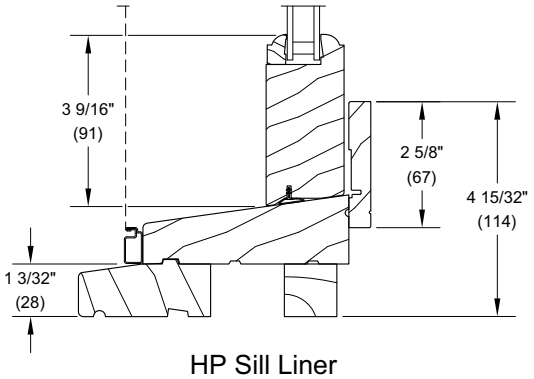

HP Sill Liner

Glazing:

- PVC tube in check rail to reinforce check rail and to protect tilt cord from sealant
- Backfilled with Dow 995 silicone sealant
- Interior glass used is laminated with a PVB inner layer
- Exterior glass is standard annealed. All CUDH operator sizes certified are OK with annealed glass. Optional tempered glass is available
- Simulated Divided Lites are available on IZ3 products
- Grilles Between the Glass are not available in IZ3 unit

Impact Zone 3 - Min/Max Guidelines, Certified Sizes and Ratings: Transom/Picture

IZ3 Minimum and Maximum Guidelines - Transom Units													
Unit Type		Min Frame Size					Max Frame Size					Max Glass	
		in	mm	×	in	mm	in	mm	×	in	mm	Sq. Feet	Sq. Meters
WUDHT	Storm Plus IZ3	13 3/8	(340)	×	13 3/8	(340)	104	(2642)	×	59 1/2	(1511)	25	2.323

IZ3 Certified Sizes and Ratings						
Unit Type	Frame Size Height			Frame Size Width		
				CN	in	mm
	CN	in	mm	-	73 3/8	(1864)
WUDHT	20	25 3/8	(645)	LC-PG55-TR		

IZ3 Minimum and Maximum Guidelines - Picture Units													
Unit Type		Min Frame Size					Max Rough Frame Size					Max Glass	
		in	mm	×	in	mm	in	mm	×	in	mm	Sq. Feet	Sq. Meters
WUDHP	Storm Plus IZ3	13 3/8	(340)	×	15 9/16	(395)	120	(3048)	×	120	(3048)	49	4.552

IZ3 Certified Sizes and Ratings									
Unit Type	Frame Size Height			Frame Size Width					
				CN	in	mm	CN	in	mm
	CN	in	mm	-	69	(1753)	-	60	(1524)
WUDHP	-	81	(2057)	CW-PG55-FW			N/A		
	-	108	(2743)	N/A			CW-PG55-FW		

Measurement Conversions

Double Hung Operating Unit						
Unit Measurements		Width		Height		
From	To					
Rough Opening		**in**	**mm**		**in**	**mm**
OM of Frame	Rough Opening	+ 1	(25)		+ 1/2	(13)
Masonry Opening w/BMC	Rough Opening	-2 1/8	(54)		-1 1/16	(27)
Top Sash		**in**	**mm**		**in**	**mm**
OM of Frame	OM of Top Sash	-2 29/32	(74)	÷ 2	-1 11/16	(43)
Bottom Sash		**in**	**mm**		**in**	**mm**
OM of Frame	OM of Bottom Sash	-2 29/32	(74)	÷ 2	+ 1/8	(03)
Glass		**in**	**mm**		**in**	**mm**
Daylight Opening	Glass	+ 1 1/16	(27)		+ 1 1/16	(27)
Screen		**in**	**mm**		**in**	**mm**
OM of Frame	OM of Screen	-1 1/2	(38)		-1 7/8	(48)
Daylight Opening	OM of Screen	+ 4 15/16	(125)	× 2	+ 9 9/32	(236)
Half Screen		**in**	**mm**		**in**	**mm**
OM of Frame	OM of Screen	-1 1/2	(38)	÷ 2	-1/4	(06)
Daylight Opening	OM of Screen	+ 4 15/16	(125)		+ 5 13/16	(148)
Combination		**in**	**mm**		**in**	**mm**
OM of Frame	OM of Combination	-1 1/2	(38)		-1 11/16	(43)
Daylight Opening	OM of Combination	+ 4 15/16	(125)	× 2	+ 9 7/16	(240)

Double Hung Transoms with Subsill					
Unit Measurements		Width		Height	
From	To				
Rough Opening		**in**	**mm**	**in**	**mm**
OM of Frame	Rough Opening	+ 1	(25)	+ 1/2	(13)
Masonry Opening w/BMC	Rough Opening	-2 1/8	-(54)	-1 1/16	(27)
Sash		**in**	**mm**	**in**	**mm**
OM of Frame	OM of Sash	-2 29/32	-(74)	-3 3/16	(81)
Daylight Opening	OM of Sash	+ 3 17/32	(90)	+ 4 11/32	(110)
Glass		**in**	**mm**	**in**	**mm**
Daylight Opening	Glass	+ 1 1/16	(27)	+ 1 1/16	(27)

NOTE: The following formula will properly size a standard cottage style double hung:

Formula

1. Select the standard size double hung that will fit the rough opening
2. Add the top and the bottom glass heights together
3. Divide the total glass height by the ration of the top sash
4. Round to the nearest standard glass height
5. Subtract from the total glass height

Example

1. WUDH with a 2/5 - 3/5 cottage style. If the rough opening is 2'-6 3/8" x 4'-8 7/8" (RO for a WUDH 2424)
2. 24" + 24" = 48"
3. 48" divide by 2/5 (0.4) = 19 13/64 (20)
4. 48" - 20" = 28"

The top sash will be a 2420 and the bottom sash will be a 2428. The call number for the example is: WUDH 2420/28.

Measurement Conversions

Double Hung Picture					
Unit Measurements		Width		Height	
From	To				
Rough Opening		**in**	**mm**	**in**	**mm**
OM of Frame	Rough Opening	+ 1	(25)	+ 1/2	(13)
Masonry Opening w/BMC	Rough Opening	-2 1/8	(54)	-1 1/16	(27)
Sash		**in**	**mm**	**in**	**mm**
OM of Frame	OM of Sash	-1 9/16	(40)	-2 9/16	(65)
Daylight Opening	OM of Sash	+ 4 7/8	(124)	+ 5 21/32	(144)
Glass		**in**	**mm**	**in**	**mm**
Daylight Opening	Glass	+ 1 1/16	(27)	+ 1 1/16	(27)

Egress Formulas for Double Hung

Clear Opening Width:

Clear Opening Width = Frame OM Width - 5 1/2" (140)

Units with Standard Sill Liner

Clear Opening Height = (Frame OM Height* / 2) - 6 3/8" (162)

Units with High Performance Sill Liner

Clear Opening Height = (Frame OM Height* / 2) - 7 1/4" (184)

*including subsill

Vent Opening

Vent Opening Width = Jamb to Jamb Width

Vent Opening Height = Top of sill liner to btm of btm sash fully opened

Vent Width * Vent Height / 144

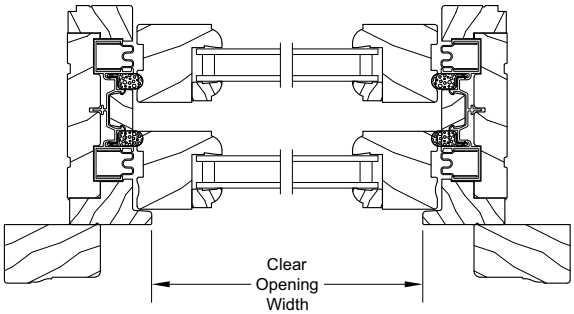

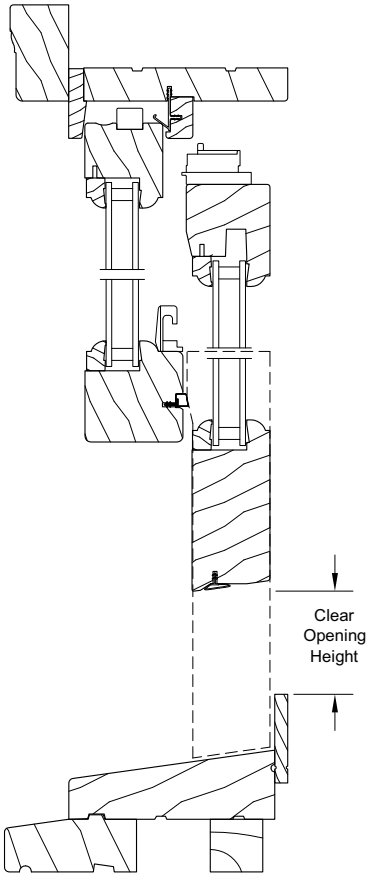

Standard Unit Measurements: Double Hung

Standard Double Hung Unit Measurements								
Width								
CN	Masonry Opening		Rough Opening		Frame Size		Daylight Opening	
	ft - in	mm	ft - in	mm	ft - in	mm	ft - in	mm
16	2-0 1/2	(622)	1-10 3/8	(568)	1-9 3/8	(543)	1-2 15/16	(379)
20	2-4 1/2	(724)	2-2 3/8	(670)	2-1 3/8	(645)	1-6 15/16	(481)
24	2-8 1/2	(826)	2-6 3/8	(772)	2-5 3/8	(746)	1-10 15/16	(583)
26	2-10 1/2	(876)	2-8 3/8	(822)	2-7 3/8	(797)	2-0 15/16	(633)
28	3-0 1/2	(927)	2-10 3/8	(873)	2-9 3/8	(848)	2-2 15/16	(684)
30	3-2 1/2	(978)	3-0 3/8	(924)	2-11 3/8	(899)	2-4 15/16	(735)
32	3-4 1/2	(1029)	3-2 3/8	(975)	3-1 3/8	(949)	2-6 15/16	(786)
36	3-8 1/2	(1130)	3-6 3/8	(1076)	3-5 3/8	(1051)	2-10 15/16	(887)
40	4-0 1/2	(1232)	3-10 3/8	(1178)	3-9 3/8	(1153)	3-2 15/16	(989)

Standard Double Hung Unit Measurements								
Height								
CN	Masonry Opening		Rough Opening		Frame Size (w/subsill)		Daylight Opening	
	ft - in	mm	ft - in	mm	ft-in	mm	ft - in	mm
12	2-10 9/16	(878)	2-9 1/2	(851)	2-9	(838)	0-10 15/16	(278)
14	3-2 9/16	(979)	3-1 1/2	(953)	3-1	(940)	1-0 15/16	(329)
16	3-6 9/16	(1081)	3-5 1/2	(1054)	3-5	(1041)	1-2 15/16	(379)
18	3-10 9/16	(1183)	3-9 1/2	(1156)	3-9	(1143)	1-4 15/16	(430)
20	4-2 9/16	(1284)	4-1 1/2	(1257)	4-1	(1245)	1-6 15/16	(481)
22	4-6 9/16	(1386)	4-5 1/2	(1359)	4-5	(1346)	1-8 15/16	(532)
24	4-10 9/16	(1487)	4-9 1/2	(1461)	4-9	(1448)	1-10 15/16	(583)
26	5-2 9/16	(1589)	5-1 1/2	(1562)	5-1	(1549)	2-0 15/16	(633)
28	5-6 9/16	(1691)	5-5 1/2	(1664)	5-5	(1651)	2-2 15/16	(684)
30	5-10 9/16	(1792)	5-9 1/2	(1765)	5-9	(1753)	2-4 15/16	(735)
32	6-2 9/16	(1894)	6-1 1/2	(1867)	6-1	(1854)	2-6 15/16	(786)
34	6-6 9/16	(1995)	6-5 1/2	(1969)	6-5	(1956)	2-8 15/16	(837)
36	6-10 9/16	(2097)	6-9 1/2	(2070)	6-9	(2057)	2-10 15/16	(887)
40	7-6 9/16	(2300)	7-5 1/2	(2273)	7-5	(2261)	3-2 15/16	(989)
42	7-10 9/16	(2402)	7-9 1/2	(2375)	7-9	(2362)	3-4 15/16	(1040)

Standard Unit Measurements: Transom/Picture

Standard Double Hung Transom Unit Measurements								
Width								
CN	Masonry Opening		Rough Opening		Frame Size		Daylight Opening	
	ft - in	mm	ft - in	mm	ft - in	mm	ft - in	mm
16	2-0 1/2	(622)	1-10 3/8	(568)	1-9 3/8	(543)	1-2 15/16	(379)
20	2-4 1/2	(724)	2-2 3/8	(670)	2-1 3/8	(645)	1-6 15/16	(481)
24	2-8 1/2	(826)	2-6 3/8	(772)	2-5 3/8	(746)	1-10 15/16	(583)
26	2-10 1/2	(876)	2-8 3/8	(822)	2-7 3/8	(797)	2-0 15/16	(633)
28	3-0 1/2	(927)	2-10 3/8	(873)	2-9 3/8	(848)	2-2 15/16	(684)
30	3-2 1/2	(978)	3-0 3/8	(924)	2-11 3/8	(899)	2-4 15/16	(735)
32	3-4 1/2	(1029)	3-2 3/8	(975)	3-1 3/8	(949)	2-6 15/16	(786)
36	3-8 1/2	(1130)	3-6 3/8	(1076)	3-5 3/8	(1051)	2-10 15/16	(887)
40	4-0 1/2	(1232)	3-10 3/8	(1178)	3-9 3/8	(1153)	3-2 15/16	(989)

Standard Double Hung Transom Unit Measurements								
Height								
CN	Masonry Opening		Rough Opening		Frame Size (no subsill)		Daylight Opening	
	ft - in	mm	ft - in	mm	ft - in	mm	ft - in	mm
12	1-6 15/16	(481)	1-5 7/8	(454)	1-5 3/8	(441)	0-9 7/8	(250)
20	2-2 15/16	(684)	2-1 7/8	(657)	2-1 3/8	(645)	1-5 7/8	(453)

Standard Double Hung Picture Unit Measurements								
Width								
CN	Masonry Opening		Rough Opening		Frame Size		Daylight Opening	
	ft - in	mm	ft - in	mm	ft - in	mm	ft - in	mm
40	3-8 1/2	(1130)	3-6 3/8	(1076)	3-5 3/8	(1051)	2-10 15/16	(887)
48	4-4 1/2	(1334)	4-2 3/8	(1280)	4-1 3/8	(1254)	3-6 15/16	(1091)
52	4-8 1/2	(1435)	4-6 3/8	(1381)	4-5 3/8	(1356)	3-10 15/16	(1192)
60	5-4 1/2	(1638)	5-2 3/8	(1584)	5-1 3/8	(1559)	4-6 15/16	(1395)
68	6-0 1/2	(1842)	5-10 3/8	(1788)	5-9 3/8	(1762)	5-2 15/16	(1599)

Standard Double Hung Picture Unit Measurements								
Height								
CN	Masonry Opening		Rough Opening		Frame Size (w/subsill)		Daylight Opening	
	ft - in	mm	ft - in	mm	ft - in	mm	ft - in	mm
38	3-6 9/16	(1081)	3-5 1/2	(1054)	3-5	(1041)	2-8 1/4	(819)
42	3-10 9/16	(1183)	3-9 1/2	(1156)	3-9	(1143)	3-0 1/4	(921)
46	4-2 9/16	(1284)	4-1 1/2	(1257)	4-1	(1245)	3-4 1/4	(1022)
50	4-6 9/16	(1386)	4-5 1/2	(1359)	4-5	(1346)	3-8 1/4	(1124)
54	4-10 9/16	(1488)	4-9 1/2	(1461)	4-9	(1448)	4-0 1/4	(1226)
58	5-2 9/16	(1589)	5-1 1/2	(1562)	5-1	(1549)	4-4 1/4	(1327)
62	5-6 9/16	(1691)	5-5 1/2	(1664)	5-5	(1651)	4-8 1/4	(1429)
66	5-10 9/16	(1792)	5-9 1/2	(1765)	5-9	(1753)	5-0 1/4	(1530)
70	6-2 9/16	(1894)	6-1 1/2	(1867)	6-1	(1854)	5-4 1/4	(1632)
74	6-6 9/16	(1996)	6-5 1/2	(1969)	6-5	(1956)	5-8 1/4	(1734)
78	6-10 9/16	(2097)	6-9 1/2	(2070)	6-9	(2057)	6-0 1/4	(1835)
86	7-6 9/16	(2300)	7-5 1/2	(2273)	7-5	(2261)	6-8 1/4	(2038)
90	7-10 9/16	(2402)	7-9 1/2	(2375)	7-9	(2362)	7-0 1/4	(2140)

Section Details: Operating

Scale: 3" = 1' 0"

Double Hung

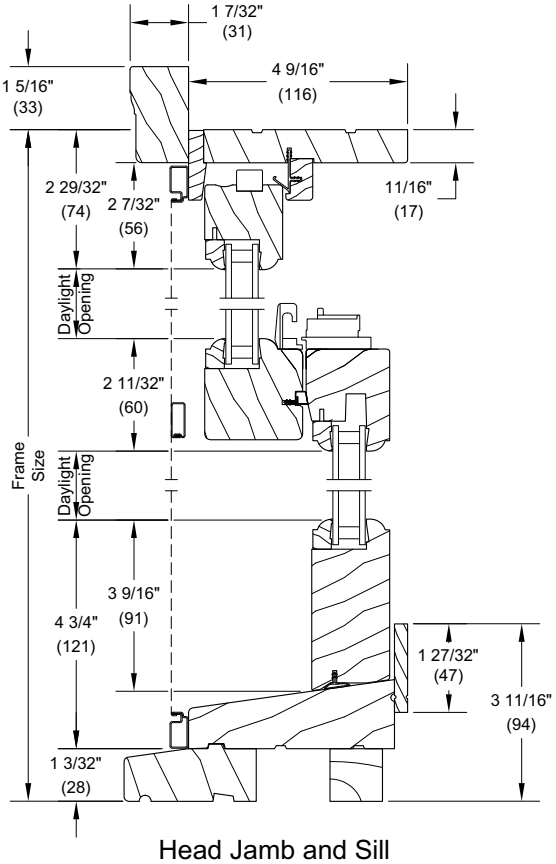

Head Jamb and Sill

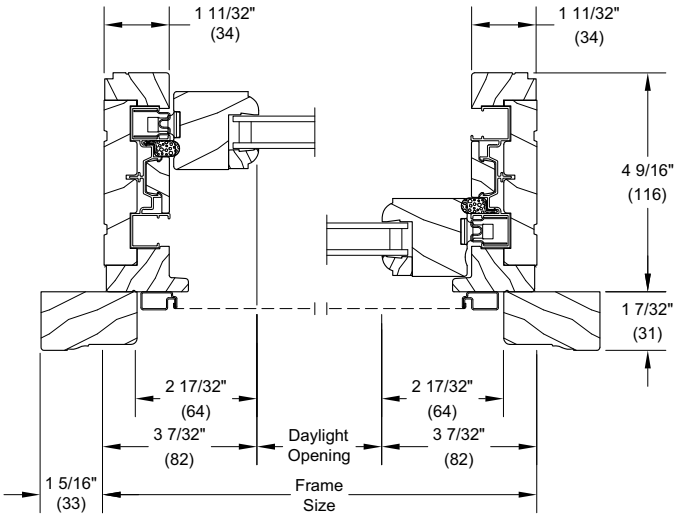

Jambs

Single Hung

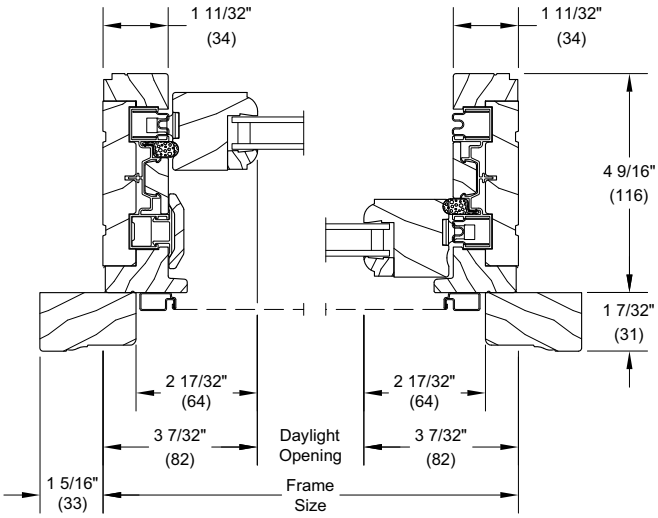

Jambs

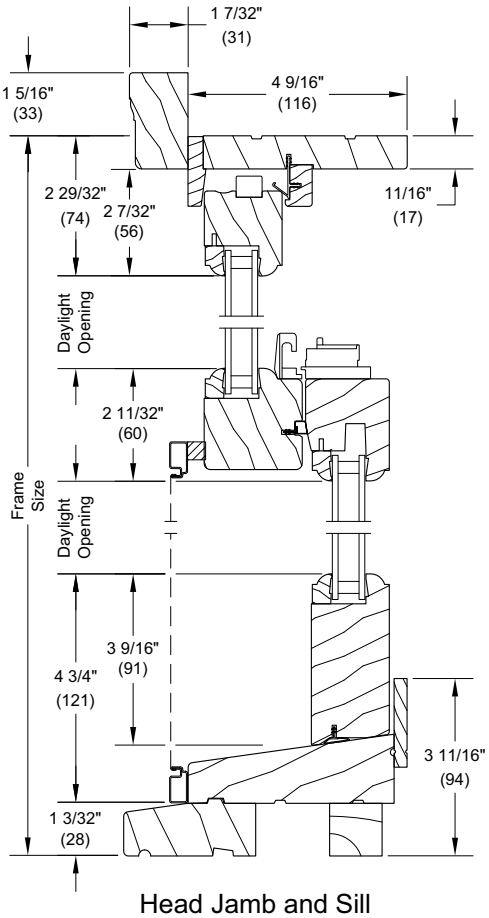

Head Jamb and Sill

Section Details: 1 5/8" Transom/Picture

Scale: 3" = 1' 0"

1 5/8" Transom

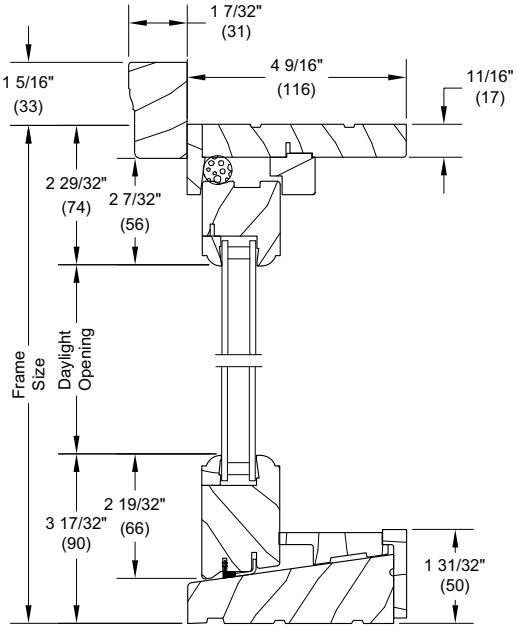

Head Jamb and Sill

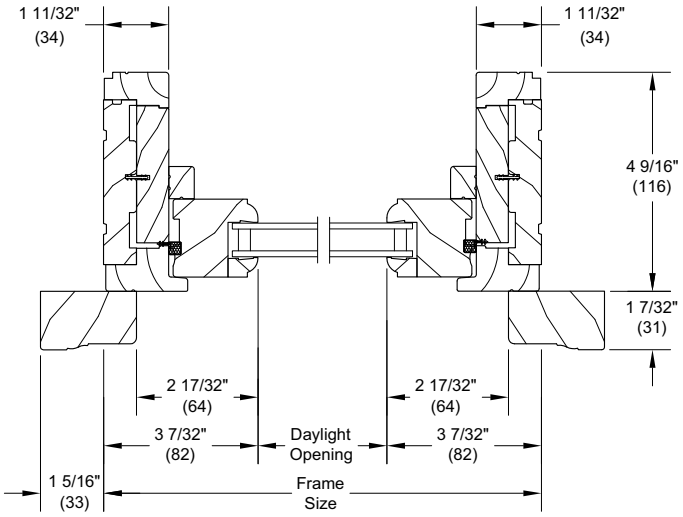

Jamb

1 5/8" Picture

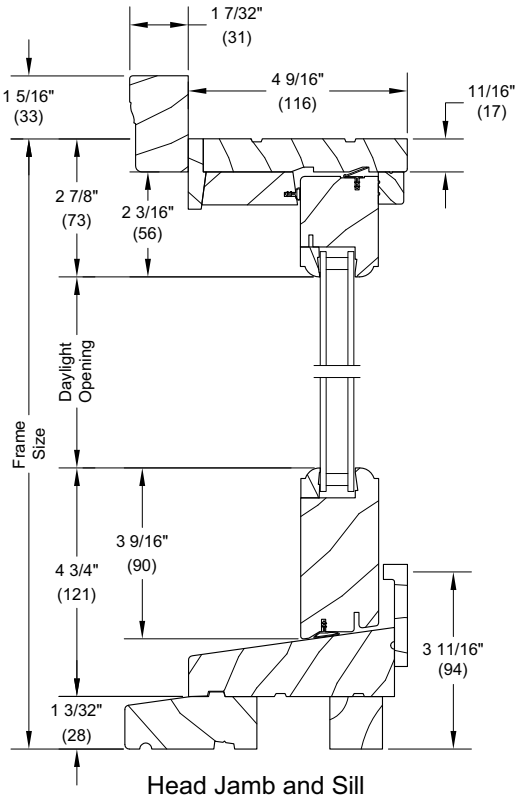

Head Jamb and Sill

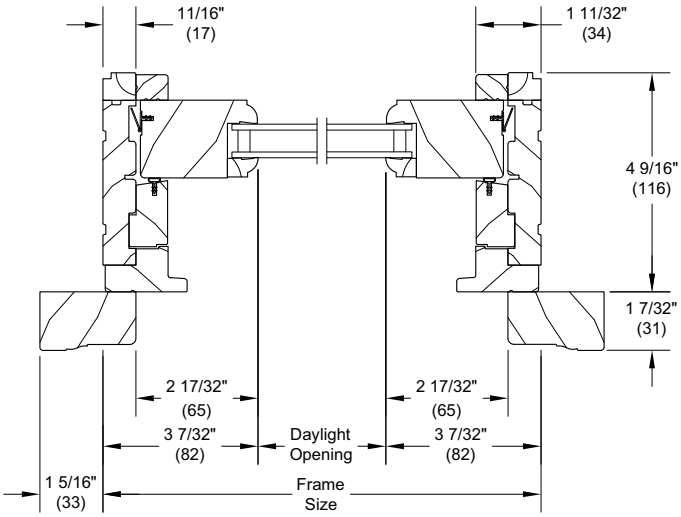

Jambs

Section Details: 2" Transom/Picture

Scale: 3" = 1' 0"

2" Transom

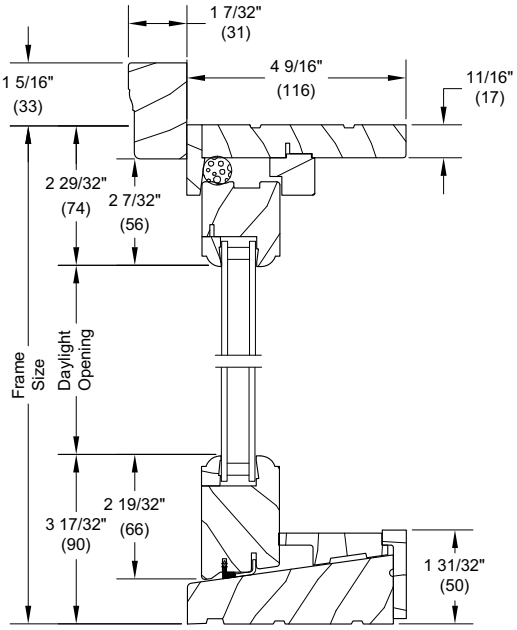

Head Jamb and Sill

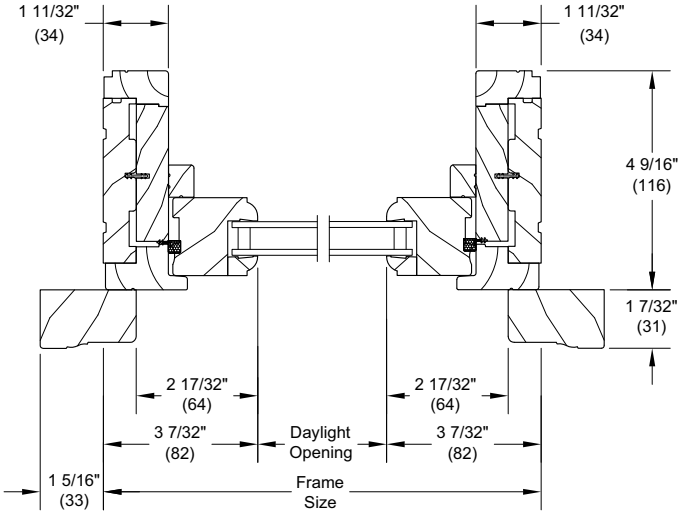

Jamb

2" Picture

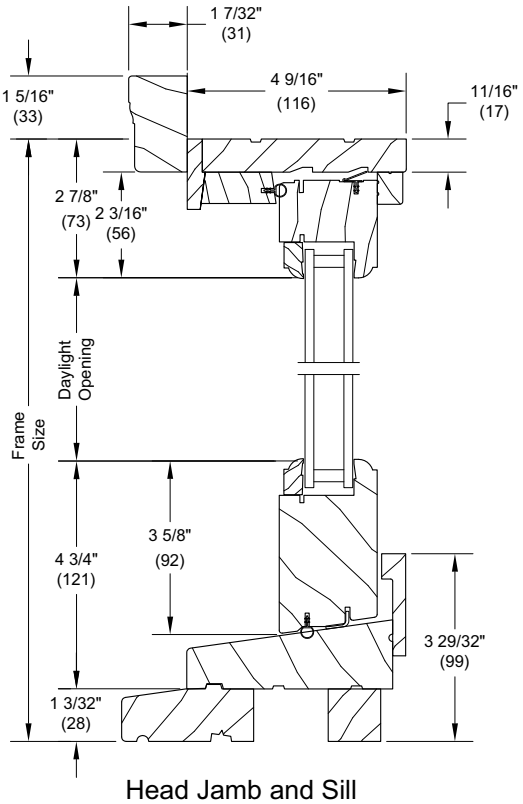

Head Jamb and Sill

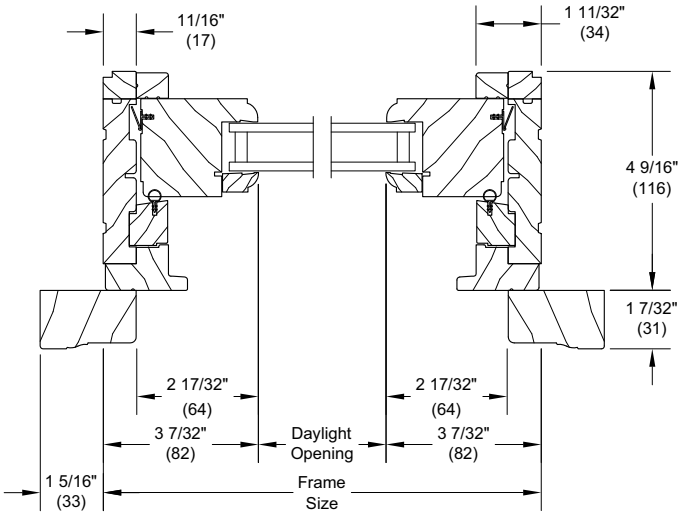

Jambs

Section Details: Operating Impact Zone 3

Scale: 3" = 1' 0"

Double Hung

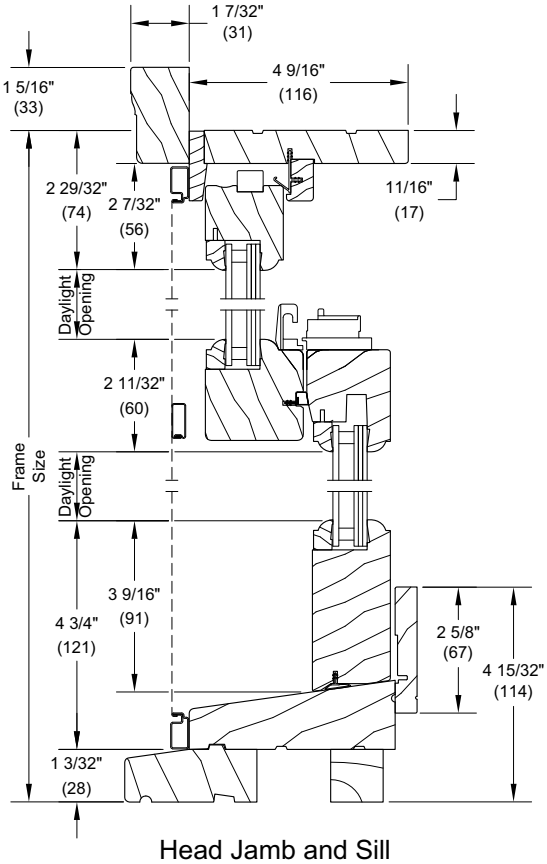

Head Jamb and Sill

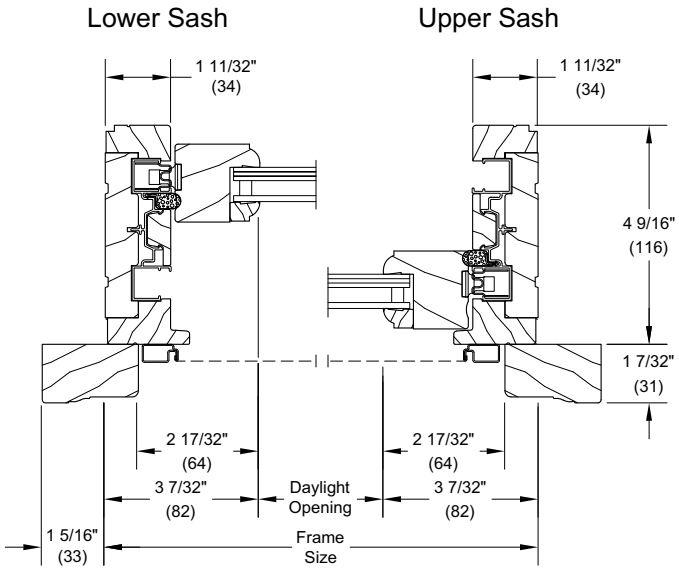

Jambs

Single Hung

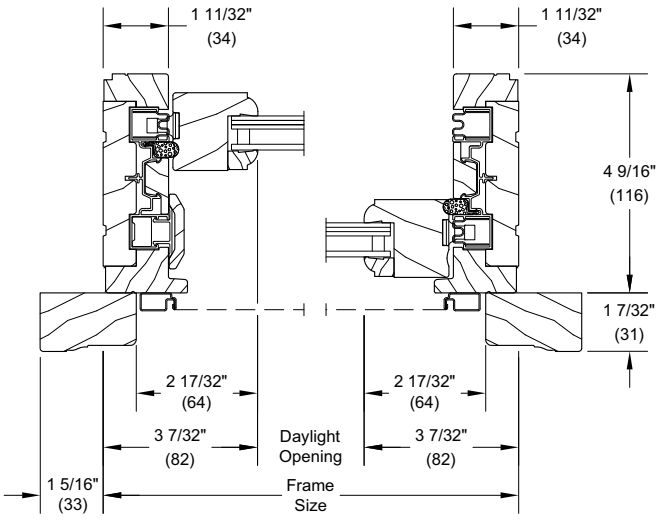

Jambs

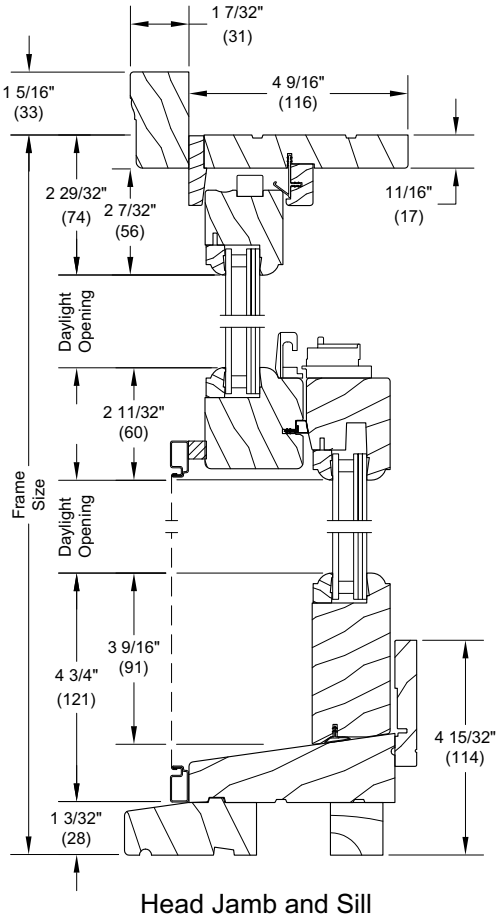

Head Jamb and Sill

Section Details: Picture Impact Zone 3

Scale: 3" = 1' 0"

1 5/8" Picture

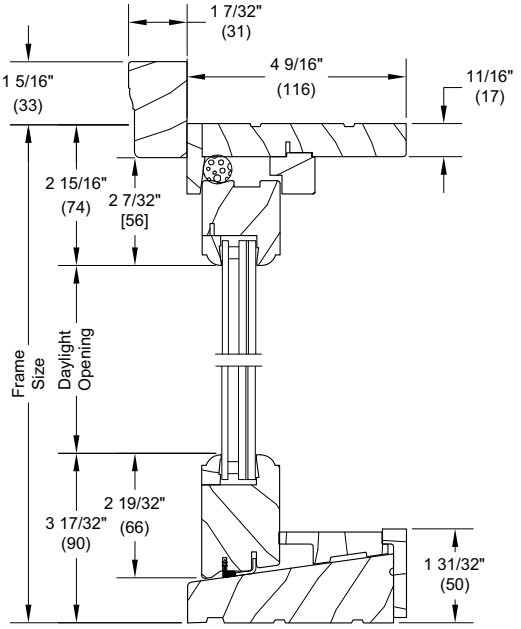

Head Jamb and Sill

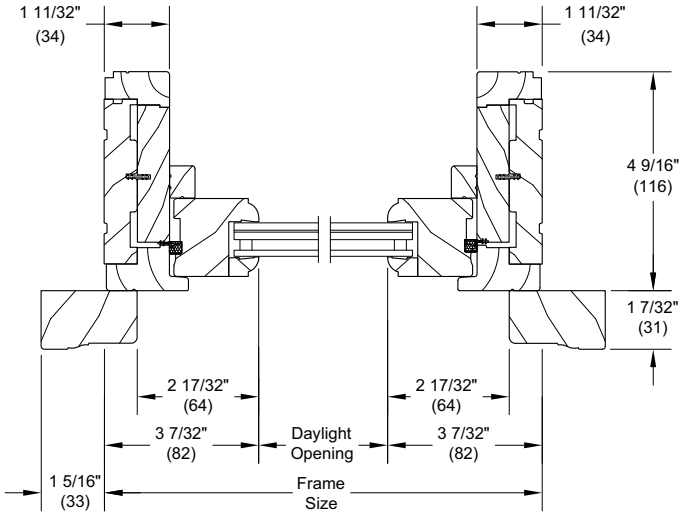

Jamb

2" Picture

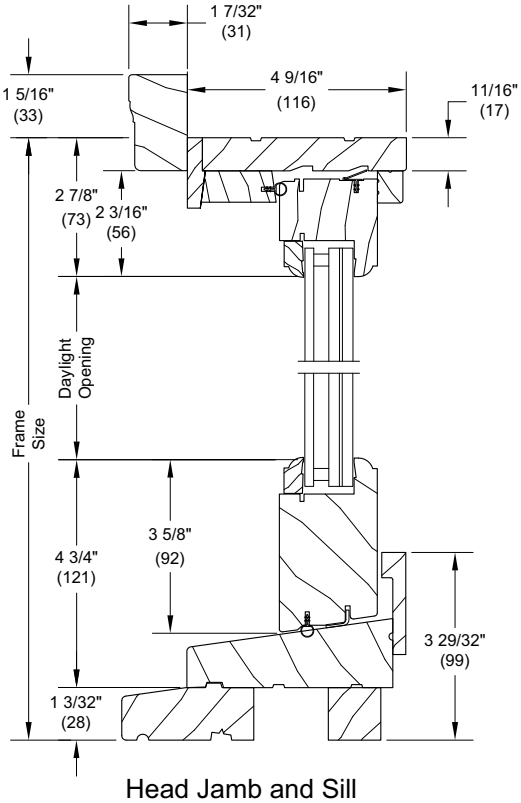

Head Jamb and Sill

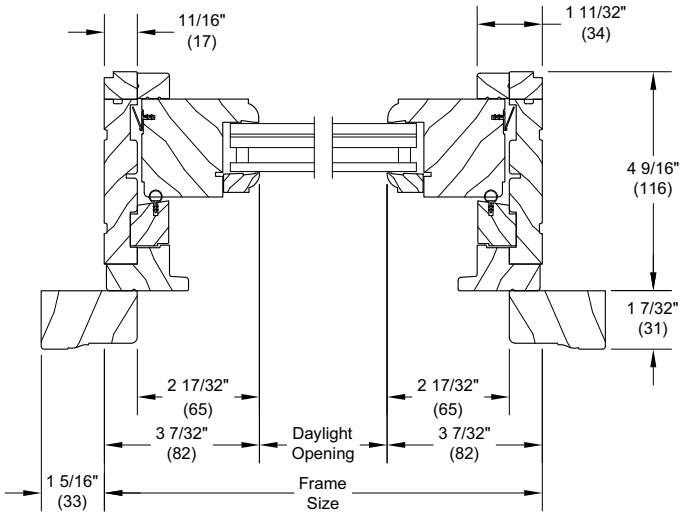

Jambs

Section Details: Combination/Storm Sash

Scale: 3" = 1' 0"

Combination w/ 6 9/16

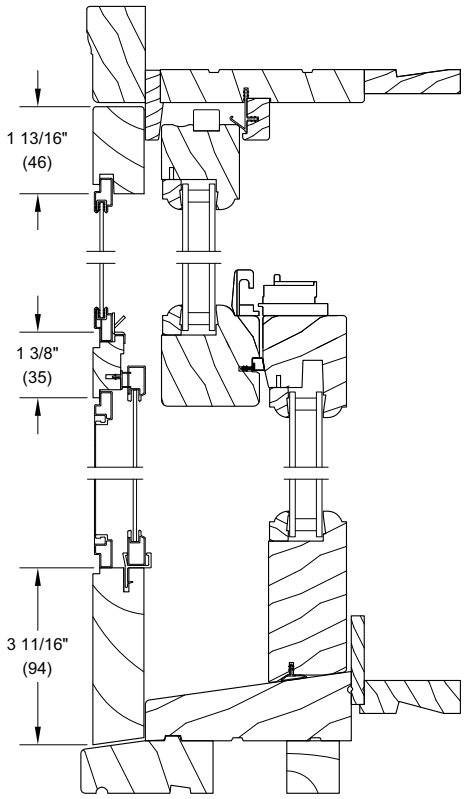

Head Jamb and Sill

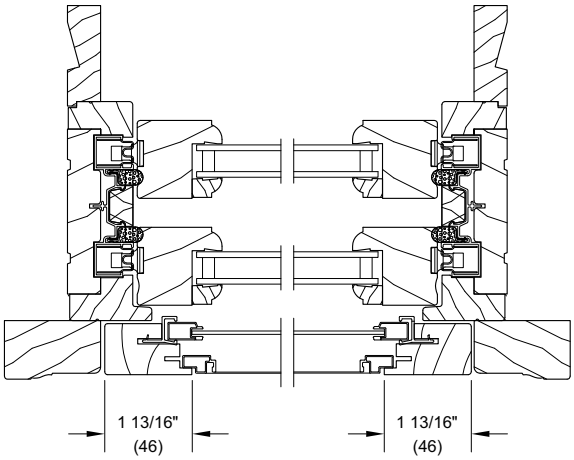

Jambs

Storm Sash

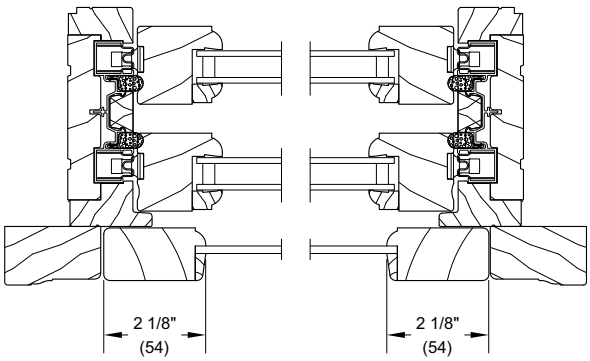

Jambs

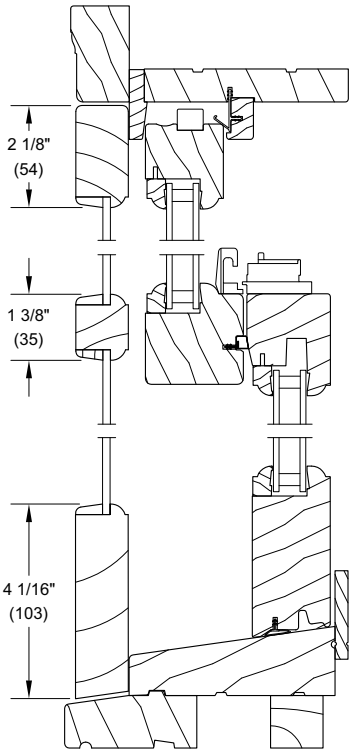

Head Jamb and Sill

Section Details: Mullions

Scale: 3" - 1' 0"

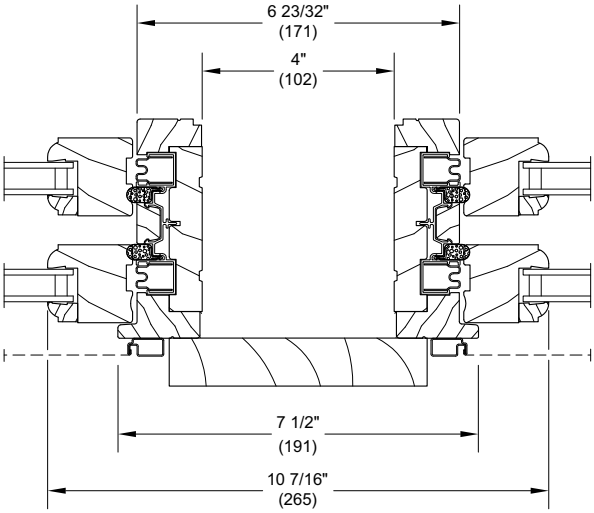

Vertical Mullion - with 4" Space Mull
Operator/Operator

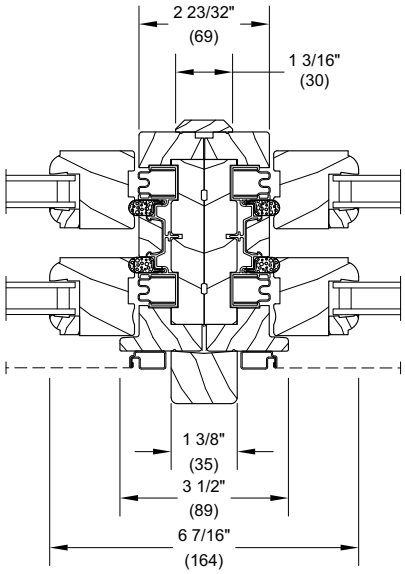

Vertical Mullion
Operator/Operator/Direct Mull

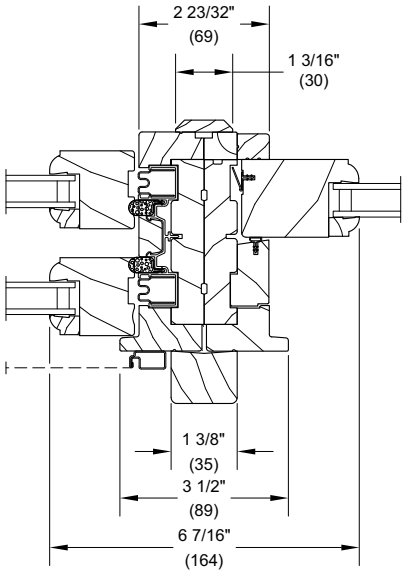

Vertical Mullion
Operator/Picture/Direct Mull

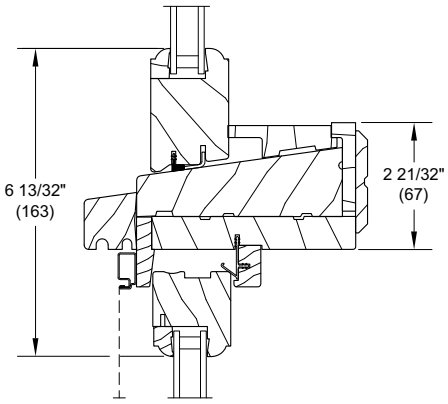

Transom mulled over WUDH

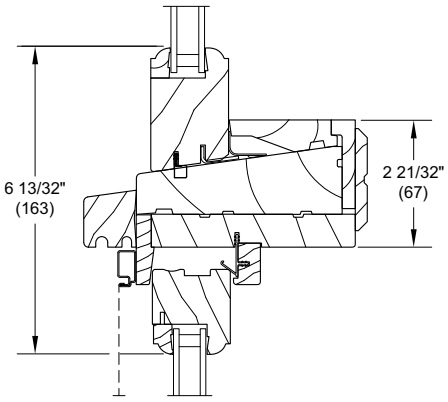

RT Transom mulled over WUDH