Wood Ultimate In-Sash Casement Polygon

Unit Features 1
Minimum and Maximum Guidelines and Certified Sizes: Stationary 2
Minimum and Maximum Guidelines: Operable 3
Measurement Conversions and Egress Openings 4
Slope to Angle and Angle to Pitch Conversions 5
Section Details: Stationary Full Frame 6
Section Details: Stationary Replacement Frame 7
Section Details: Stationary in DH Replacement Frame 8
Section Details: Operable Full Frame 9
Section Details: Operable Replacement Frame 10
Section Details: Operable Replacement Frame in Double Hung Frame 11
Section Details: Stationary In-Sash Casement Polygon Mullion Options 12
Section Details: Operable In-Sash Casement Polygon Mullion Options 13
Configuration Limits 14
Polygon Shape Reference 15
Field Measurement 16

Unit Features

Wood Ultimate Casement Polygon: WUCAPOLY

Wood Ultimate Replacement Casement Polygon: WURCAPOLY

Frame:

- Minimum frame angle 15°, minimum short leg of Rough Opening 6"

WUCAPOLY Hardware:

- Folding handles are standard.
  - Color: Satin Taupe is standard with optional colors White, Bronze, Satin Chrome, Satin Nickel, Oil Rubbed Bronze, Brass, Antique Brass.
- Locks used are a concealed multi-point sequential system.
  - OM spring line heights over 26 1/8" (664) to 53 1/8" (1349) will have a 2 point locking system.
  - OM spring line heights greater than 53 1/8" (1349) will have a 3 point locking system.
- Operable polygons have a single arm operator that includes a crank hardware system that allows the window to open to a full 90 degrees with a minimal reduction of egress net clear opening. All steel is covered with an E-Gard™ protection coat and the standard track is stainless steel. Operation force at handle is 5 lbs. or less.
- Units greater than 71 1/8" (1807) in height will require the use of a sash limiter, which is located on the operator track.
- Stainless Steel packages are available for coastal application.
- Replacement frame does not allow for the wash-mode feature.

Optional Glass for Full Frame Units:

- 1" Tri-pane LoĒ-180™ outer piece and LoĒ-180™ inner piece with Argon
- 1" Tri-pane LoĒ-180™ outer piece and LoĒ-180™ inner piece with Krypton/Argon
- 1" Tri-pane LoĒ²272® outer piece and LoĒ²272® inner piece with Argon
- 1" Tri-pane LoĒ²272® outer piece and LoĒ²272® inner piece with Krypton/Argon
- 1" Tri-pane LoĒ 366® outer piece and LoĒ-180™ inner piece with Argon
- 1" Tri-pane LoĒ 366® outer piece and LoĒ-180™ inner piece with Krypton/Argon

Minimum and Maximum Guidelines and Certified Sizes: Stationary

Minimum and Maximum Guidelines - Stationary In-Sash Polygon Full Frame and Replacement Frame												
Unit Type	Frame Size										Minimum Spring line	
	Min Width			Min Height		Max Width			Max Height			
	in	mm	×	in	mm	in	mm	×	in	mm	in	mm
P3	23	(584)	×	23 1/2	(597)	63	(1600)	×	95 9/16	(2427)	N/A	
P4	15	(381)	×	15 1/2	(394)	95 1/16	(2415)	×	63 1/2	(1613)	7 1/2	(191)
P5	15	(381)	×	15 1/2	(394)	87	(2210)	×	95 9/16	(2427)	7 1/2	(191)
P6,P8	21	(533)	×	21 1/2	(546)	95 1/16	(2415)	×	63 1/2	(1613)	N/A	

Certified Sizes and Ratings								
Unit Type	Frame Size Height		Frame Size Width					
			in	mm	in	mm	in	mm
	in	mm	64	(1626)	72	(1829)	88	(2235)
Wood In-Sash Polygon Stationary	**72 1/16**	**(1830)**	CW-PG50-FW		CW-PG5O-FW		-	
Wood In-Sash Polygon Stationary	**97 1/16**	**(2465)**	CW-PG50-FW		CW-PG50-FW		CW-PG5O-FW	

Certified Sizes and Ratings						
Unit Type	Frame Size Height		Frame Size Width			
			in	mm	in	mm
	in	mm	64	(1626)	96	(2438)
Replacement Clad In-Sash Polygon Stationary	**64**	**(1626)**	CW-PG50-FW		CW-PG50-FW	
Replacement Clad In-Sash Polygon Stationary	**96 1/8**	**(2442)**	CW-PG50-FW		-	

Minimum and Maximum Guidelines: Operable

Minimum and Maximum Guidelines - Operable In-Sash Polygon Full Frame and Replacement Frame										
Unit Type	**Frame Size**									
	Min Width			**Min Spring line**		**Max Width**			**Max Height**	
	in	**mm**	**×**	**in**	**mm**	**in**	**mm**	**×**	**in**	**mm**
P4-0, P4-5/6	16	(406)	×	27 1/16	(687)	36	(914)	×	97 1/16	(2465)
						40	(1016)	×	92 1/16	(2338)
P5-1, P5-5/6, P5-13/14	16	(406)	×	27 1/16	(687)	36	(914)	×	97 1/16	(2465)
						40	(1016)	×	92 1/16	(2338)
P6-5	16	(406)	×	27 1/16	(687)	36	(914)	×	97 1/16	(2465)
						40	(1016)	×	92 1/16	(2338)
P8-1	28	(711)	×	N/A		48	(1219)	×	N/A	

NOTE: All operating polygons are non-certified.

Measurement Conversions and Egress Openings

In-Sash Polygon					
Unit Measurements		**Width**		**Height**	
From	**To**				
Rough Opening		**in**	**mm**	**in**	**mm**
OM of Frame	Rough Opening	+ 1	(25)	+ 1/2	(13)
Masonry Opening w/BMC	Rough Opening	-2 1/8	(54)	-1 3/4	(44)
Sash Opening	Rough Opening	+ 2 5/16	(59)	+ 2 3/4	(70)
Sash		**in**	**mm**	**in**	**mm**
Glass Size	Sash Opening	+ 3 13/32	(87)	+ 3 13/32	(87)
Glass Size	OM of Sash	+ 3 3/32	(79)	+ 3 3/32	(79)
Glass		**in**	**mm**	**in**	**mm**
Daylight Opening	Glass	+ 1 3/8	(35)	+ 1 3/8	(35)

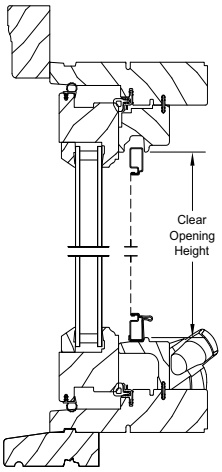

Head Jamb and Sill

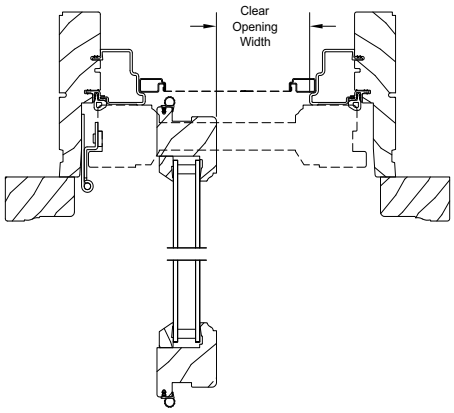

Jambs

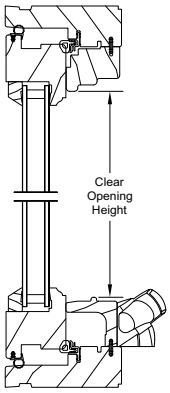

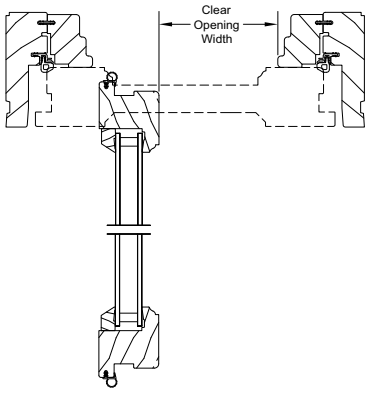

Slope to Angle and Angle to Pitch Conversions

Slope to Angle / Degree Conversions					
Slope	Angle	Degree / Minutes	Slope	Angle	Degree / Minutes
1/12	4.76	4 degree 46'	13/12	47.29	47 degree 14'
2/12	9.46	9 degree 28'	14/12	49.40	49 degree 24'
3/12	14.04	14 degree 2'	15/12	51.34	51 degree 20'
4/12	18.43	18 degree 26'	16/12	53.13	53 degree 8'
5/12	22.62	22 degree 37'	17/12	54.78	54 degree 47'
6/12	26.57	26 degree 34'	18/12	56.31	56 degree 19'
7/12	30.26	30 degree 15'	19/12	57.72	57 degree 43'
8/12	33.69	33 degree 41'	20/12	59.04	59 degree 2'
9/12	36.87	36 degree 52'	21/12	60.26	60 degree 15'
10/12	39.81	39 degree 48'	22/12	61.39	61 degree 23'
11/12	42.51	42 degree 31'	23/12	62.45	62 degree 27'
12/12	45.00	45 degree 0'	24/12	63.43	63 degree 26'

Angle to Pitch Conversions							
Angle	Pitch	Angle	Pitch	Angle	Pitch	Angle	Pitch
1	0.21/12	26	5.85/12	51	14.82/12	76	48.13/12
2	0.42/12	27	6.11/12	52	15.36/12	77	51.98/12
3	0.63/12	28	6.38/12	53	15.92/12	78	56.56/12
4	0.84/12	29	6.65/12	54	16.52/12	79	61.73/12
5	1.05/12	30	6.93/12	55	17.14/12	80	68.06/12
6	1.26/12	31	7.21/12	56	17.79/12	81	75.77/12
7	1.47/12	32	7.50/12	57	18.48/12	82	85.38/12
8	1.69/12	33	7.79/12	58	19.20/12	83	97.73/12
9	1.90/12	34	8.09/12	59	19.97/12	84	114.17/12
10	2.12/12	35	8.40/12	60	20.78/12	85	137.16/12
11	2.33/12	36	8.72/12	61	21.65/12	86	171.61/12
12	2.55/12	37	9.04/12	62	22.57/12	87	228.97/12
13	2.77/12	38	9.38/12	63	23.55/12	88	343.64/12
14	2.99/12	39	9.72/12	64	24.60/12	89	687.48/12
15	3.22/12	40	10.07/12	65	25.73/12		
16	3.44/12	41	10.43/12	66	26.95/12		
17	3.67/12	42	10.80/12	67	28.27/12		
18	3.90/12	43	11.19/12	68	29.70/12		
19	4.13/12	44	11.59/12	69	31.26/12		
20	4.37/12	45	12.00/12	70	32.97/12		
21	4.61/12	46	12.43/12	71	34.85/12		
22	4.85/12	47	12.87/12	72	36.93/12		
23	5.09/12	48	13.33/12	73	39.25/12		
24	5.34/12	49	13.80/12	74	41.85/12		
25	5.60/12	50	14.30/12	75	44.78/12		

Section Details: Stationary Full Frame

Scale: 3" = 1' 0"

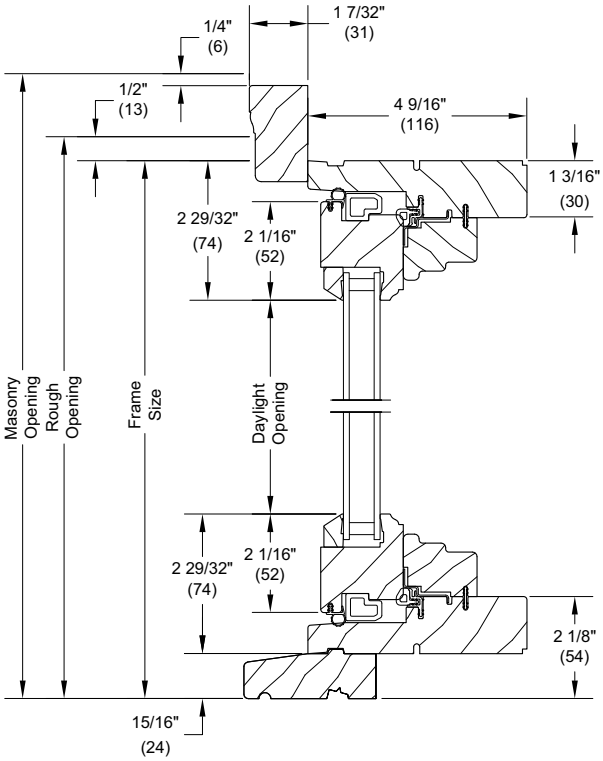

Head Jamb and Sill - Sloped Sill Cover

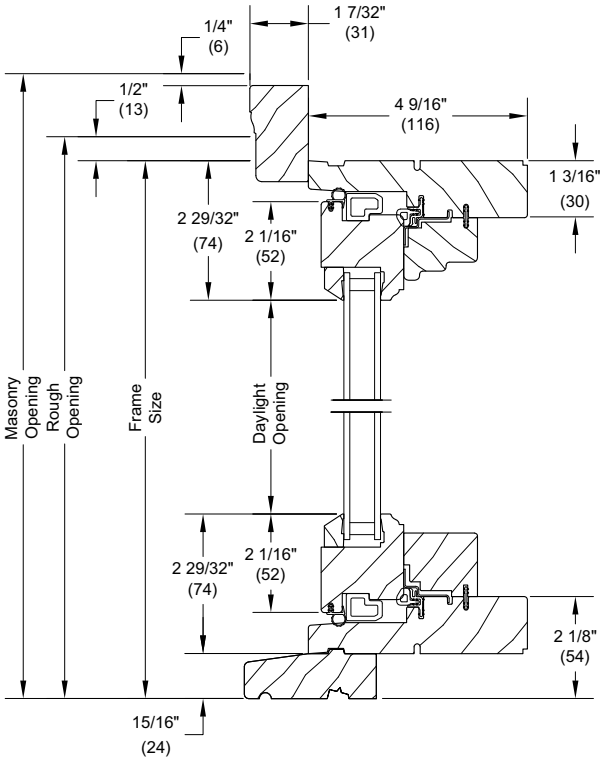

Head Jamb and Sill - Flat Sill Cover

Head Jamb and Sill - Sloped Sill Cover

- P3 - 3 through 22
- P4 - 1, 2, 3, 4, 11, 12, 13, 14, 15, 16, 17
- P5 - 2, 7, 8
- P6 - 1, 2, 3, 4, 6
- P8 - 1, 2, 3, 4

Head Jamb and Sill - Flat Sill Cover

- P3 - 1, 2
- P4 - 5, 6, 7, 8, 9, 10
- P5 - 1, 3, 4, 5, 6, 9, 10, 11, 12, 13, 14, 15, 16
- P6 - 5, 7, 8

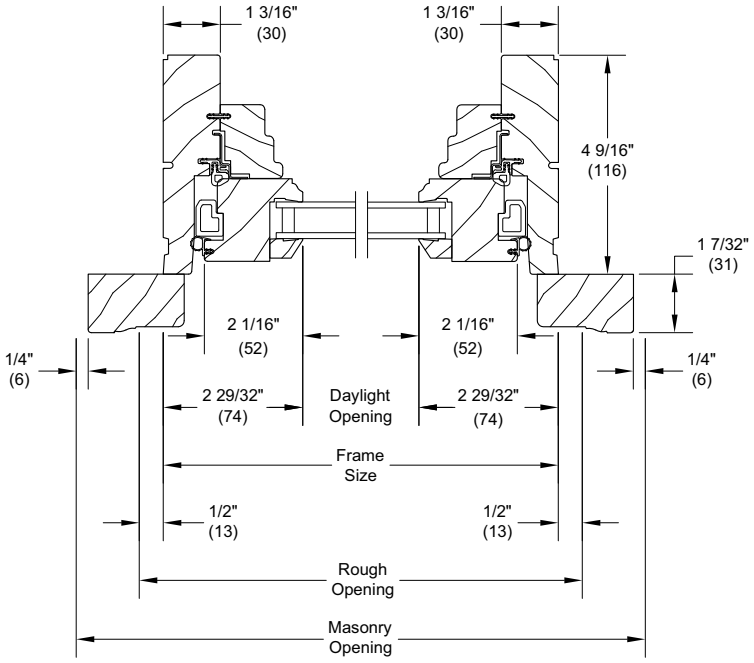

Jambs

Section Details: Stationary Replacement Frame

Scale: 3" = 1' 0"

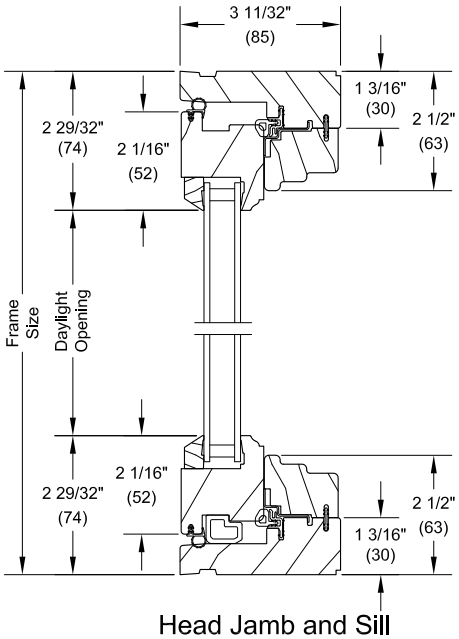

Head Jamb and Sill
Sloped Sill Cover

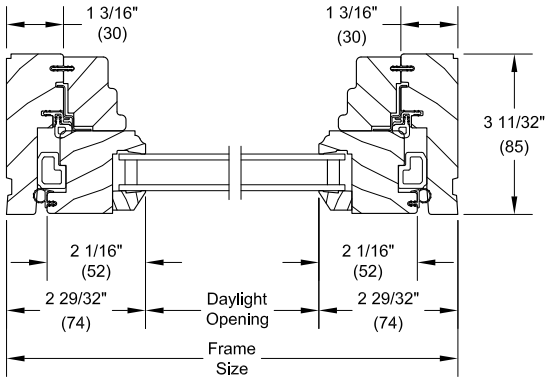

Jambs

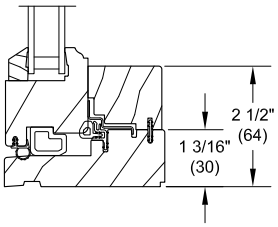

Sill Detail
Flat Sill Cover

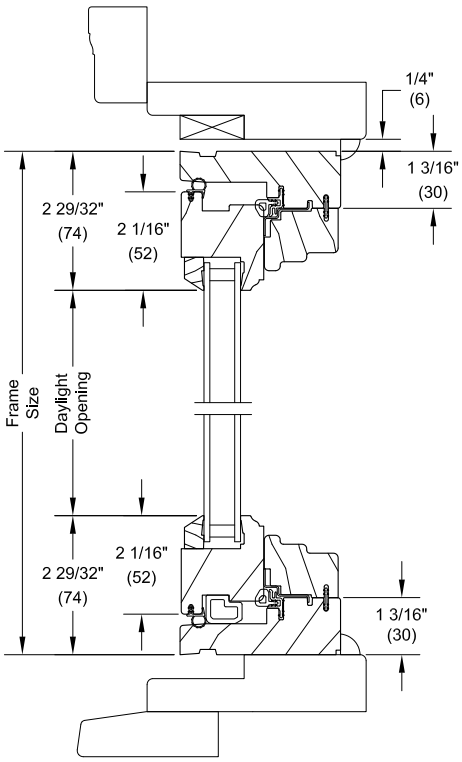

Head Jamb and Sill

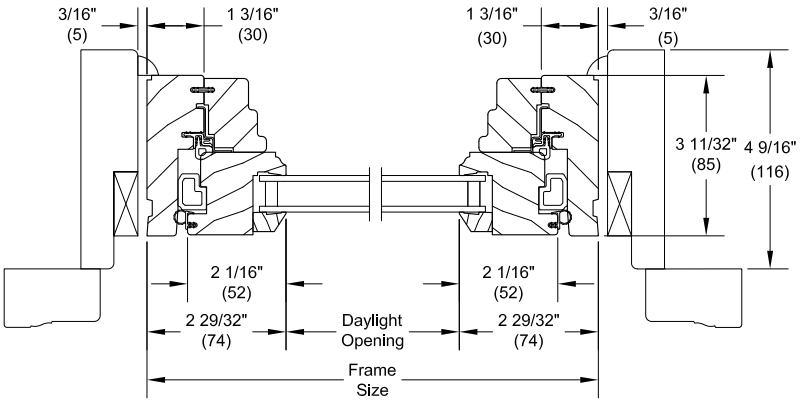

Jambs

Section Details: Stationary in DH Replacement Frame

Scale: 3" = 1' 0"

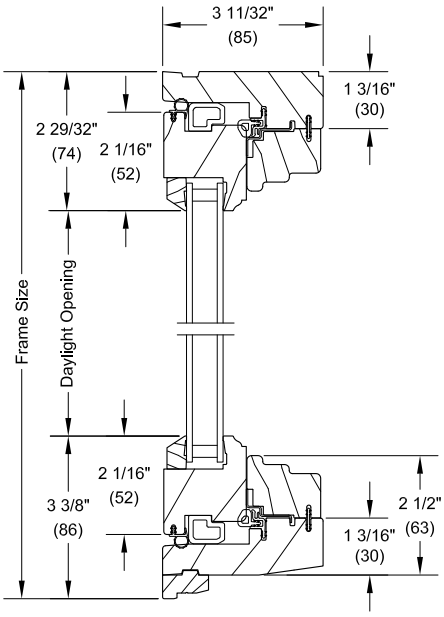

Head Jamb and Sill
Sloped Sill Cover

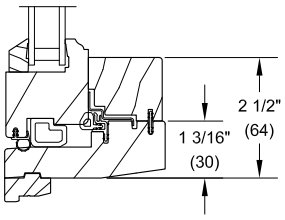

Sill Detail
Flat Sill Cover

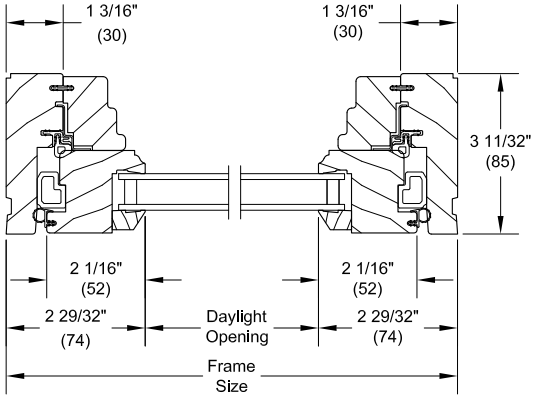

Jambs

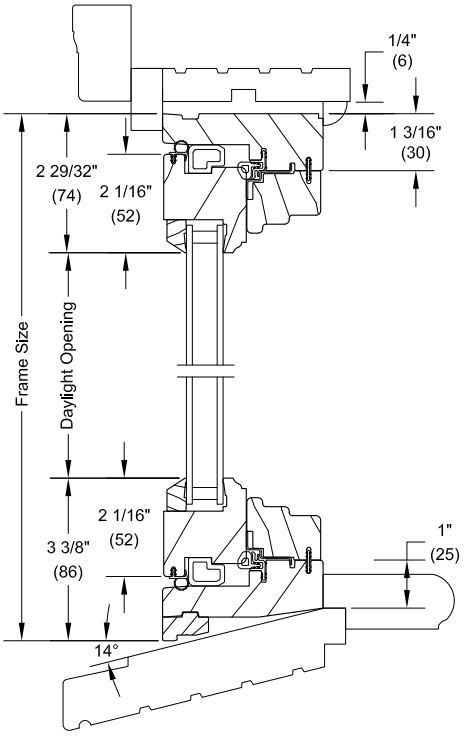

Head Jamb and Sill

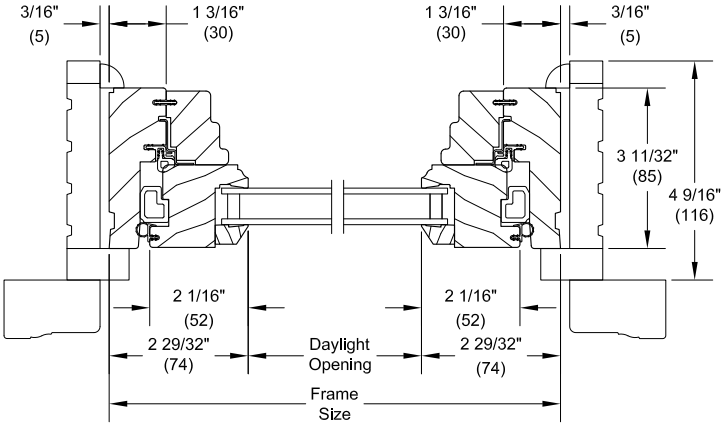

Jambs

Section Details: Operable Full Frame

Scale: 3" = 1' 0"

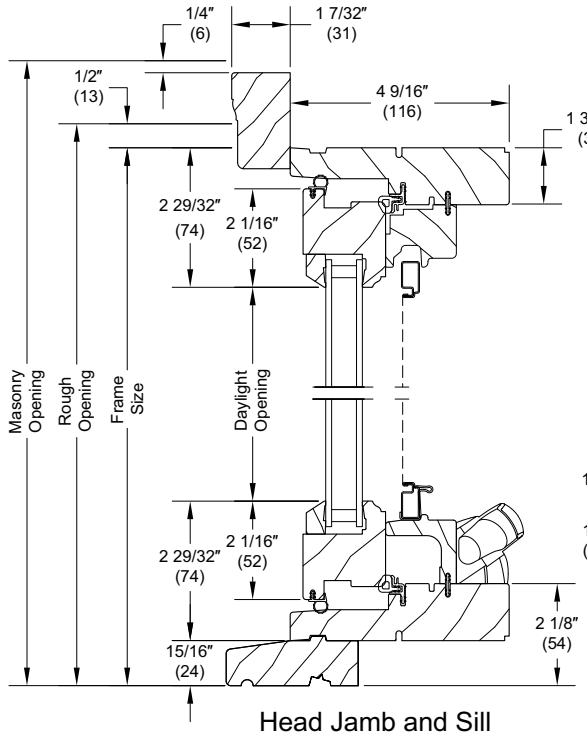

Head Jamb and Sill

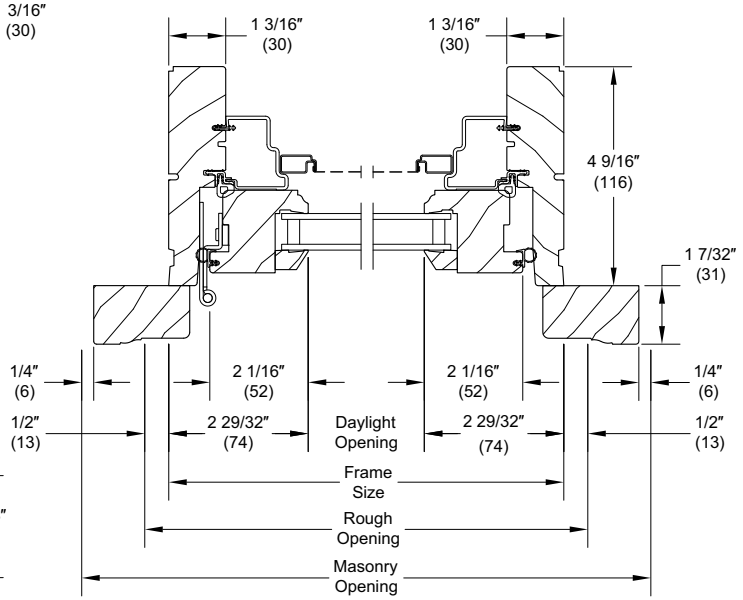

Jambs

Section Details: Operable Replacement Frame

Scale: 3" = 1' 0"

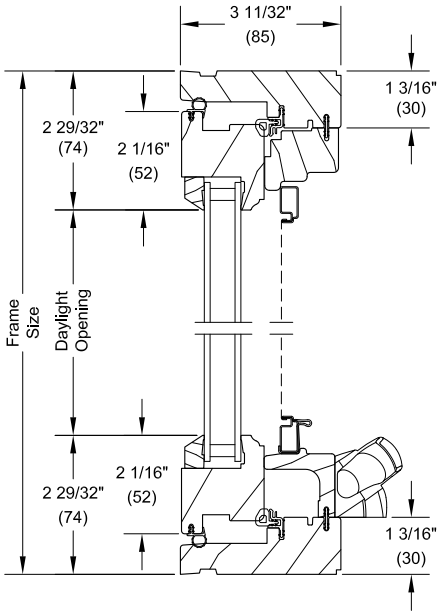

Head Jamb and Sill

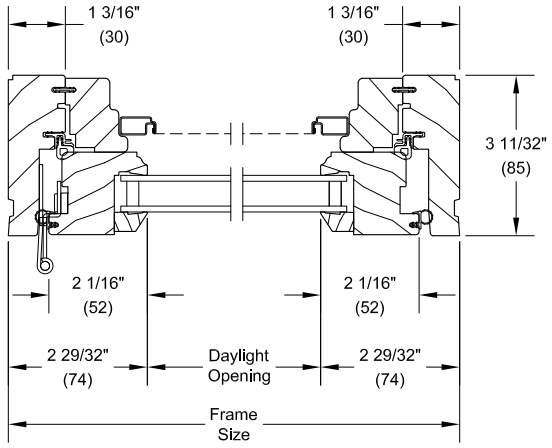

Jambs

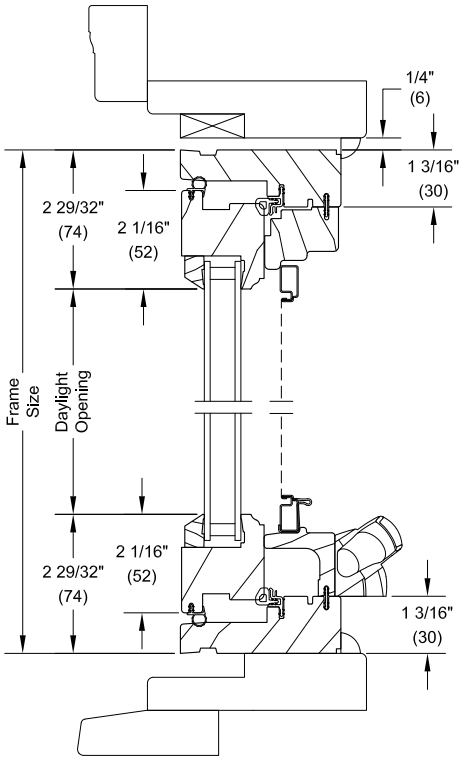

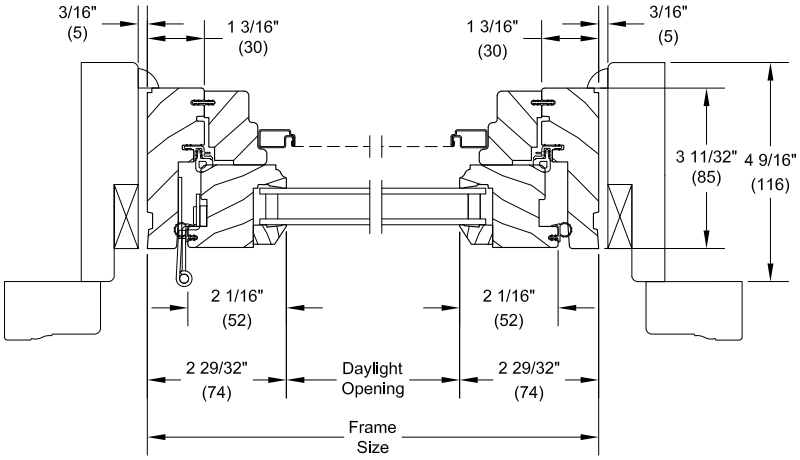

Jambs

Section Details: Operable Replacement Frame in Double Hung Frame

Scale: 3" = 1' 0"

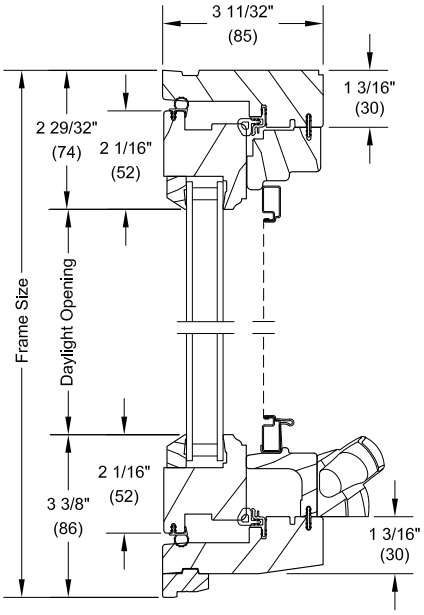

Head Jamb and Sill

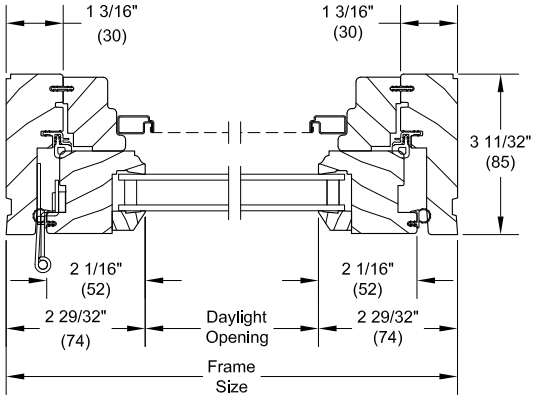

Jambs

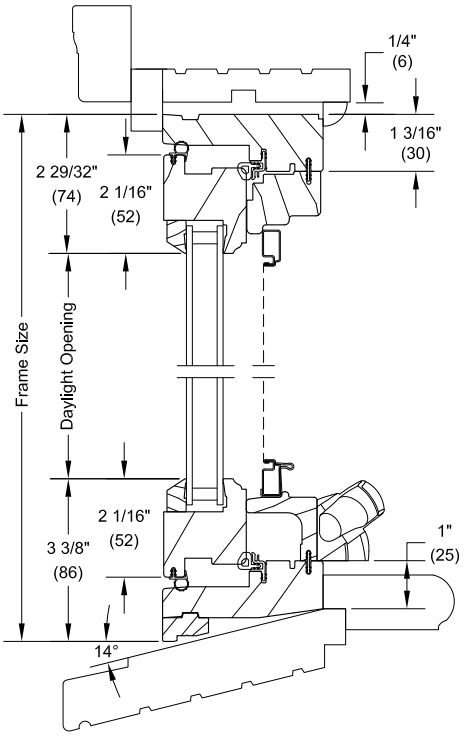

Head Jamb and Sill

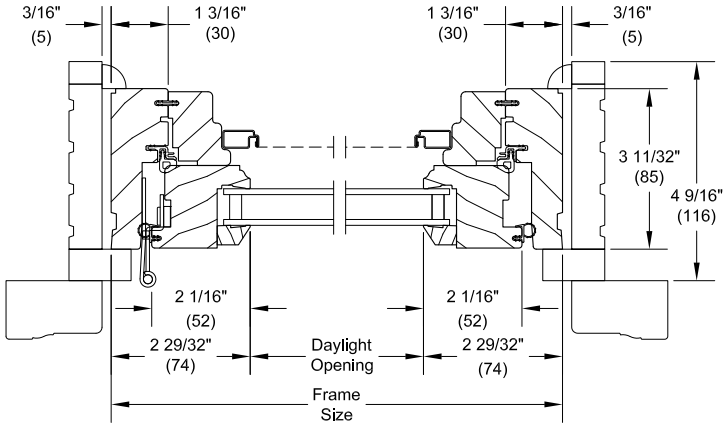

Jambs

Section Details: Stationary In-Sash Casement Polygon Mullion Options

Scale: 3" = 1' 0"

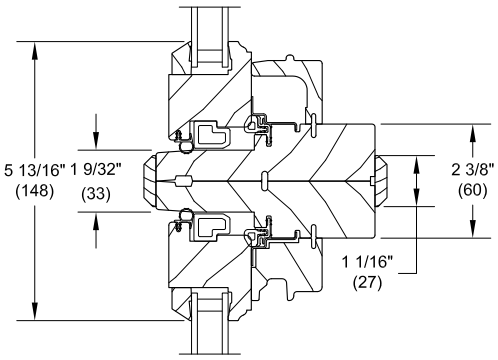

Horizontal Mullion

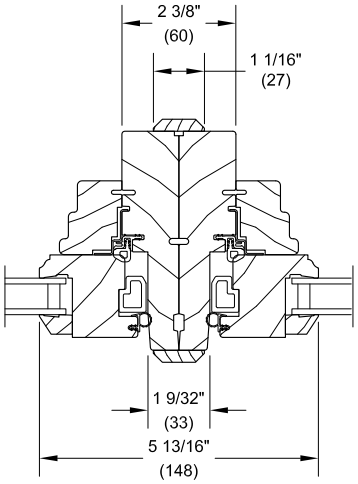

Vertical Mullion

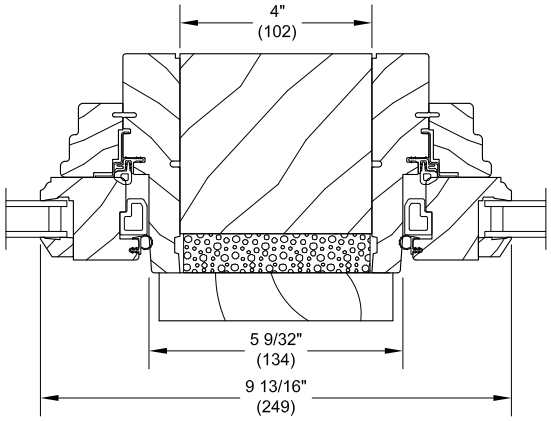

4" Space Mull

Section Details: Operable In-Sash Casement Polygon Mullion Options

Scale: 3" = 1' 0"

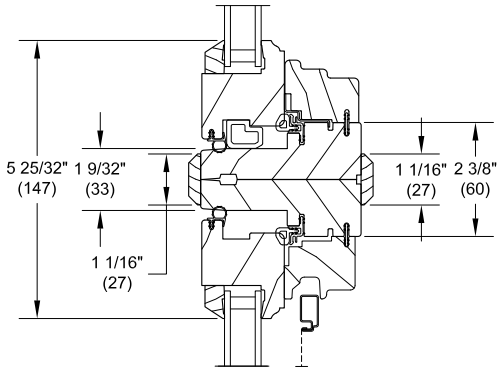

Horizontal Mullion - Stationary/Operator

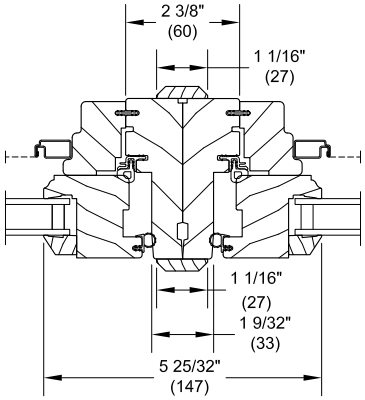

Vertical Mullion - Operator/Operator/Direct Mull

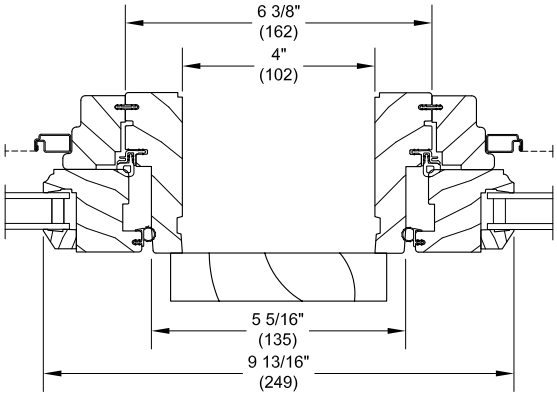

Vertical Mullion - with 4" Space Mull Operator/Operator

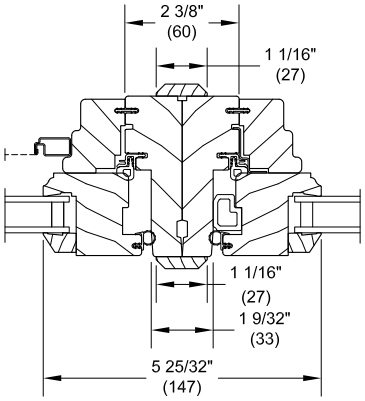

Vertical Mullion - Operator/Picture/Direct Mull

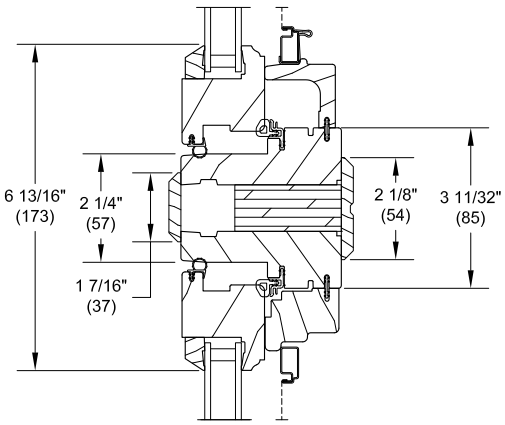

Horizontal Mullion - LVL Operator/Operator

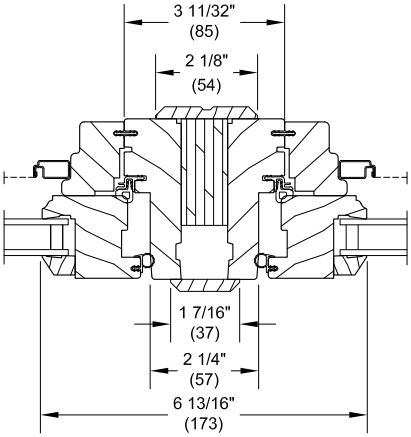

Vertical Mullion - LVL Operator/Operator

Configuration Limits

3 9/16" Bottom Rail Limitations		
Shape	Standard Bottom Rail	Standard and Wide Bottom Rail
All P3	X	
P4 - 1,2,3,4	X	
P4 - 5,6		X
P4 - 7 through 17	X	
P5 - 1		X
P5 - 2,3,4	X	
P5 - 5,6		X
P5 - 7 through 12	X	
P5 - 13, 14		X
P5 - 15, 16	X	
P6 - 1,2,3,4	X	
P6 - 5		X
P6 - 6,7,8	X	
P8 - 1,2,3,4	X	

WUCA Subsull Rules		
Shape	Subsill by default	BMC all around
P3 - 1,2,5,9,10,17,18	X	
P3 - 3,4,6,7,8,1,12,13,14,15,16,19,20,21,22		X
P4 - 1,2,5,6,7,8,9,10,13,14	X	
P4 - 3,4,11,12,15,16,17		X
P5 - 1,3,4,5,6,9 through 16	X	
P5 - 2,7,8		X
P6 - 1,2,3,4		X
P6 - 5,6,7,8	X	
P8 - 1,2,3,4		X

Polygon Shape Reference

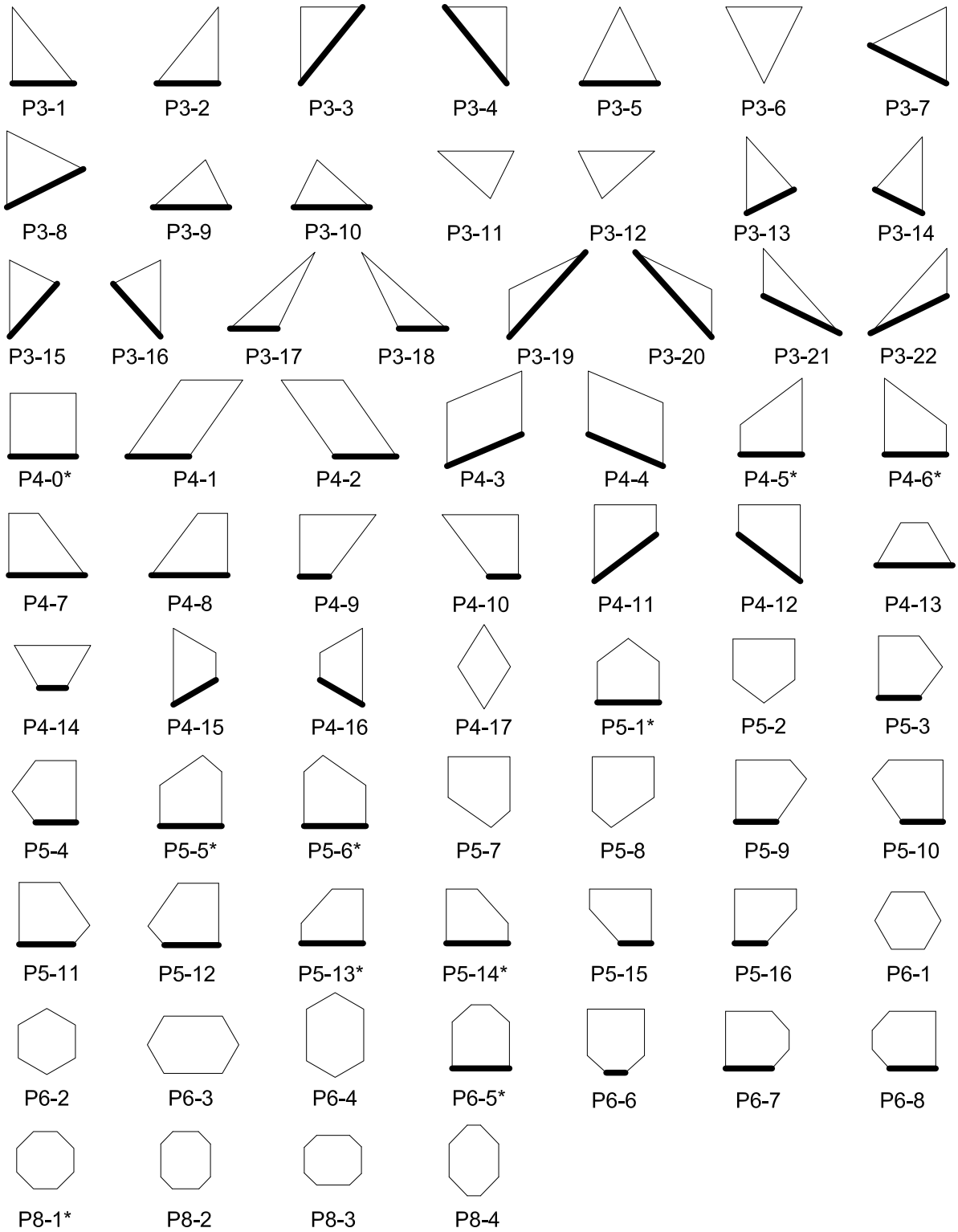

NOTE: Please contact your Marvin representative for availability and more information.

NOTE: Dark line indicates subsill placement.

Field Measurement

Operator and Stationary In-Sash Casement Polygon Conversion from Field Measurement to Frame OSM		
Width		
Condition	**Formula**	
If blind stop width is 1/2" (13) or less)	Frame OM Width - inside opening width - 0.375	
Height		
Condition	**Type of Sill Bevel**	**Formula**
If old sill angle is less than 8°	Flat-bottom Sill	Frame OM Height = inside opening height - 0.250
If old sill angle is greater than 8° and less than 14°	8-degreee-bottom sill	Frame OM Height = inside opening height - 0.0563 (frame IM height has a .250 clearance)
If old is angle is 14° of greater	14-degree bottom sill	Frame OM Height = inside height = .431 (frame OM Height has a .250 clearance)
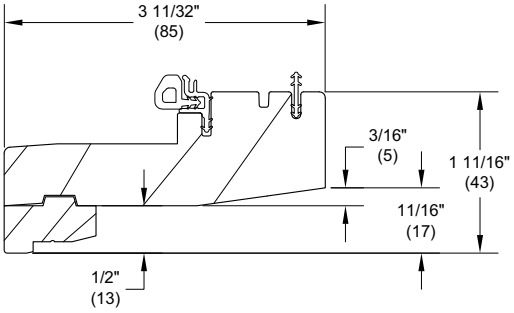
Interior Frame Size to Frame Size (exterior)	
Frame Bevel	Conversions
0°	0
8°	+3/16" (5)
14°	+11/16" (17)