2 1/4" Wood Arch Top Swinging French Doors

Standard Unit Measurements and Spring Line Measurements 1
Minimum and Maximum Guidelines / Measurement Conversions 2
Net Clear Openings 3
Inswing Section Details: Operating 4
Inswing Section Details: Stationary and Sidelite 5
Inswing Section Details: Panel Configurations 6
Inswing Section Details: Ultimate Swinging Screen 7
Inswing Section Details: Flat Panel Placement 8
Inswing Section Details: Raised Panel Placement 9
Outswing Section Details: Operating 10
Outswing Section Details: Stationary and Sidelite 11
Outswing Section Details: Panel Configurations 12
Outswing Section Details: Flat Panel Placement 13
Outswing Section Details: Raised Panel Placement 14

Standard Unit Measurements and Spring Line Measurements

Standard Inswing and Outswing Unit Measurements

Height

Unit Type	Call Number	Masonry Opening		Rough Opening		Frame Size		Panel OM		Daylight Opening		Glass Size	
		ft - in	mm	ft - in	mm	ft - in	mm	ft-in	mm	ft - in	mm	ft - in	mm
All Configurations	8-0	8-1 1/16	(2465)	8-0	(2438)	7-11 1/2	(2426)	7-8 1/2	(2350)	6-6 3/8	(1991)	6-7 11/16	(2024)
	10-0	10-1 1/16	(3075)	10-0	(3048)	9-11 1/2	(3035)	9-8 1/2	(2959)	8-6 3/8	(2600)	8-7 11/16	(2634)

Width

Unit Type	Call Number	Masonry Opening		Rough Opening		Frame Size		Panel OM		Daylight Opening		Glass Size	
		ft - in	mm	ft - in	mm	ft - in	mm	ft-in	mm	ft - in	mm	ft-in	mm
1 Panel	2-6	2-10 9/16	(878)	2-8 7/16	(824)	2-7 7/16	(799)	2-5 1/16	(738)	1-5 3/32	(434)	1-6 13/32	(468)
	2-8	3-0 9/16	(929)	2-10 7/16	(875)	2-9 7/16	(849)	2-7 1/16	(789)	1-7 3/32	(485)	1-8 13/32	(518)
	3-0	3-4 9/16	(1030)	3-2 7/16	(976)	3-1 7/16	(951)	2-11 1/16	(891)	1-11 3/32	(587)	2-0 13/32	(620)
2 Panel	5-0	5-3 3/4	(1619)	5-1 5/8	(1565)	5-0 5/8	(1540)	2-5 1/16	(738)	1-5 3/32	(434)	1-6 13/32	(468)
	5-4	5-7 3/4	(1721)	5-5 5/8	(1667)	5-4 5/8	(1641)	2-7 1/16	(789)	1-7 3/32	(485)	1-8 13/32	(518)
	6-0	6-3 3/4	(1924)	6-1 5/8	(1870)	6-0 5/8	(1845)	2-11 1/16	(891)	1-11 3/32	(587)	2-0 13/32	(620)

RT6 - Spring Line Measurements

RO Radius Width for X = 3 - 4 1/2" (1029)
RO Radius Width for XX = 6- 0 1/2" (1842)

CN	Rough Opening		Rough Opening Springline		Frame Size		Frame Size Springline	
	ft-in	mm	ft-in	mm	ft-in	mm	ft-in	mm
2680	8-0	(2438)	7-8 5/8	(2353)	7-11 1/2	(2426)	7-8 5/16	(2344)
26100	10-0	(3048)	9-8 5/8	(2962)	9-11 1/2	(3035)	9-8 5/16	(2954)
2880	8-0	(2438)	7-8 3/16	(2342)	7-11 1/2	(2426)	7-7 7/8	(2333)
28100	10-0	(3048)	9-8 3/16	(2951)	9-11 1/2	(3035)	9-7 7/8	(2942)
3080	8-0	(2438)	7-7 1/8	(2315)	7-11 1/2	(2426)	7-6 7/8	(2308)
30100	10-0	(3048)	9-7 1/8	(2924)	9-11 1/2	(3035)	9-6 7/8	(2917)
5080	8-0	(2438)	7-5 1/8	(2264)	7-11 1/2	(2426)	7-4 13/16	(2256)
50100	10-0	(3048)	9-5 1/8	(2873)	9-11 1/2	(3035)	9-4 13/16	(2865)
5480	8-0	(2438)	7-4 1/8	(2238)	7-11 1/2	(2426)	7-3 7/8	(2231)
54100	10-0	(3048)	9-4 1/8	(2848)	9-11 1/2	(3035)	9-3 7/8	(2841)
6080	8-0	(2438)	7-1 15/16	(2183)	7-11 1/2	(2426)	7-1 11/16	(2176)
60100	10-0	(3048)	9-1 15/16	(2792)	9-11 1/2	(3035)	9-1 11/16	(2786)

RT2 - Spring Line Measurements

CN	Rough Opening		Rough Opening Springline		Frame Size		Frame Size Springline	
	ft-in	mm	ft-in	mm	ft-in	mm	ft-in	mm
2680	8-0	(2438)	6-7 3/4	(2026)	7-11 1/2	(2426)	6-7 13/16	(2026)
26100	10-0	(3048)	8-7 3/4	(2635)	9-11 1/2	(3035)	8-7 13/16	(2636)
2880	8-0	(2438)	6-6 3/4	(2000)	7-11 1/2	(2426)	6-6 13/16	(2001)
28100	10-0	(3048)	8-6 3/4	(2610)	9-11 1/2	(3035)	8-6 13/16	(2611)
3080	8-0	(2438)	6-4 3/4	(1949)	7-11 1/2	(2426)	6-4 13/16	(1950)
30100	10-0	(3048)	8-4 3/4	(2559)	9-11 1/2	(3035)	8-4 13/16	(2560)
5080	8-0	(2438)	5-5 3/16	(1656)	7-11 1/2	(2426)	5-5 3/16	(1656)
50100	10-0	(3048)	7-5 3/16	(2265)	9-11 1/2	(3035)	7-5 3/16	(2265)
5480	8-0	(2438)	5-3 3/16	(1605)	7-11 1/2	(2426)	5-3 3/16	(1605)
54100	10-0	(3048)	7-3 3/16	(2215)	9-11 1/2	(3035)	7-3 3/16	(2215)
6080	8-0	(2438)	4-11 3/16	(1503)	7-11 1/2	(2426)	4-11 3/16	(1503)
60100	10-0	(3048)	6-11 3/16	(2113)	9-11 1/2	(3035)	6-11 3/16	(2113)

Minimum and Maximum Guidelines / Measurement Conversions

Minimum and Maximum Guidelines										
Unit Type	Frame Size									
	Min Size Unit					Max Size Unit				
	in	mm	×	in	mm	in	mm	×	in	mm
1 - PanelOperator	31 7/16	(799)	×	70	(1778)	37 7/16	(951)	×	119 1/2	(3035)
2 - PanelOperator	60 5/8	(1540)	×	70	(1778)	72 5/8	(1845)	×	119 1/2	(3035)

Unit Measurements		Width				Height	
From	To						
Rough Opening		in	mm			in	mm
OM of Frame	Rough Opening	+ 1	(25)			+ 1/2	(13)
Masonry Opening w/BMC	Rough Opening	-2 1/8	(54)			-1 1/16	(27)
Operating Panel		in	mm			in	mm
OM of Frame	OM of Panel (x1)	-2 3/8	(60)			-3	(76)
OM of Frame	OM of Panel (x2)	-2 1/2	(64)	÷	2	-3	(76)
Daylight Opening	OM of Panel	+ 11 31/32	(304)			+ 14 3/32	(358)
Glass		in	mm			in	mm
Daylight Opening	Glass	+ 1 5/16	(33)			+ 1 5/16	(33)

Net Clear Openings

Scale: 1 1/2" = 1'

Net Clear Opening 2 1/4" Inswing French Door			
Height			
Unit Type	**Call Number**	**Net Clear Openings**	
		ft - in	**mm**
All Configurations At Springline	8-0	7-7 23/32	(2329)
	10-0	9-7 23/32	(2939)
Width			
Unit Type	**Call Number**	**Net Clear Openings**	
		ft-in	**mm**
1 Panel	2-6	2-1 15/32	(647)
	2-8	2-3 15/32	(698)
	3-0	2-7 15/32	(799)
2 Panel	5-0	4-4 3/16	(1325)
	5-4	4-8 3/16	(1427)
	6-0	5-4 3/16	(1630)

Net Clear Opening 2 1/4" Outswing French Door			
Height			
Unit Type	**Call Number**	**Net Clear Openings**	
		ft - in	**mm**
All Configurations At Springline	8-0	7-8 1/8	(2340)
	10-0	9-8 1/8	(2950)
Width			
Unit Type	**Call Number**	**Net Clear Openings**	
		ft-in	**mm**
1 Panel	2-6	2-1 15/32	(647)
	2-8	2-3 15/32	(698)
	3-0	2-7 15/32	(799)
2 Panel	5-0	4-4 3/16	(1325)
	5-4	4-8 3/16	(1427)
	6-0	5-4 3/16	(1630)

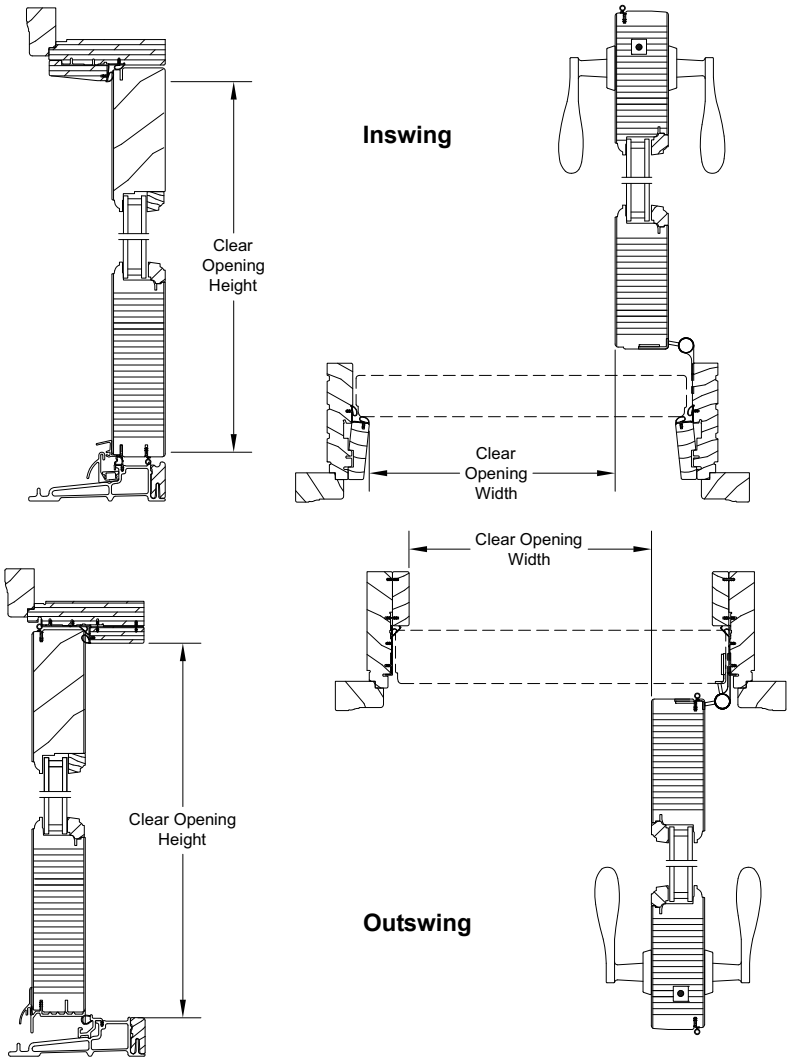

Inswing Section Details: Operating

Scale: 3" = 1' 0"

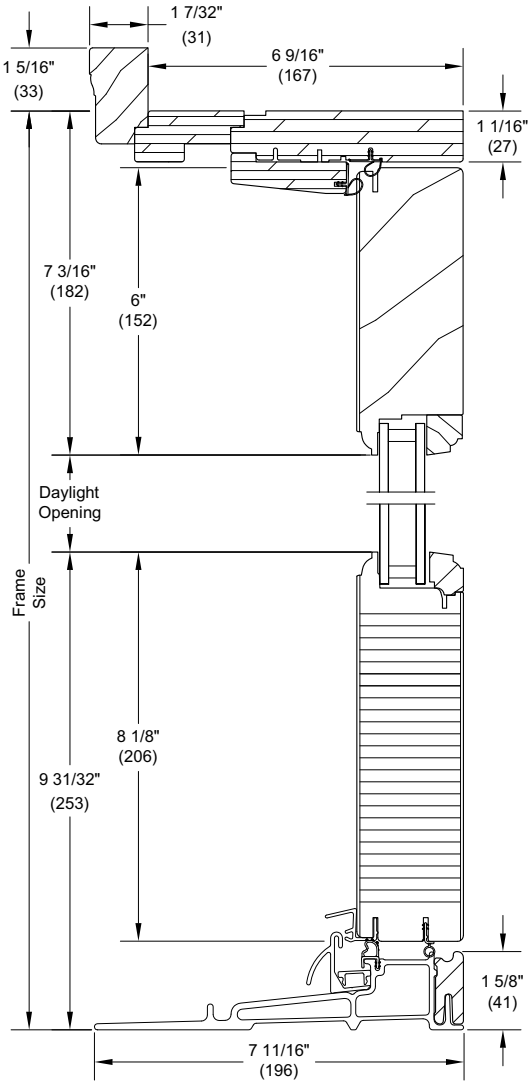

Head Jamb and Sill

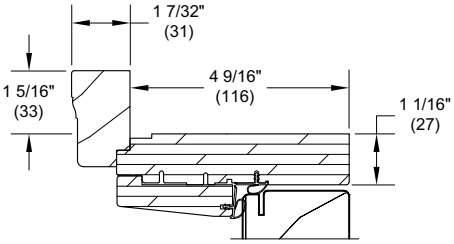

4 9/16" Head Jamb

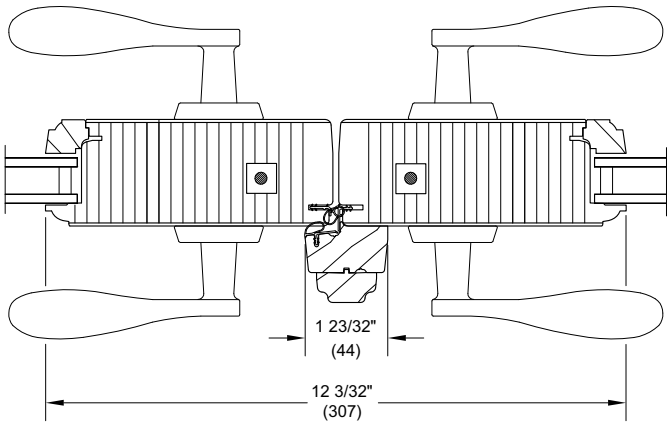

XX L Meeting Stiles

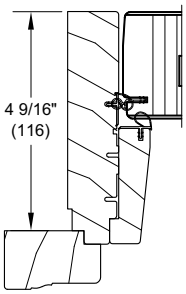

4 9/16" Jamb
RT2

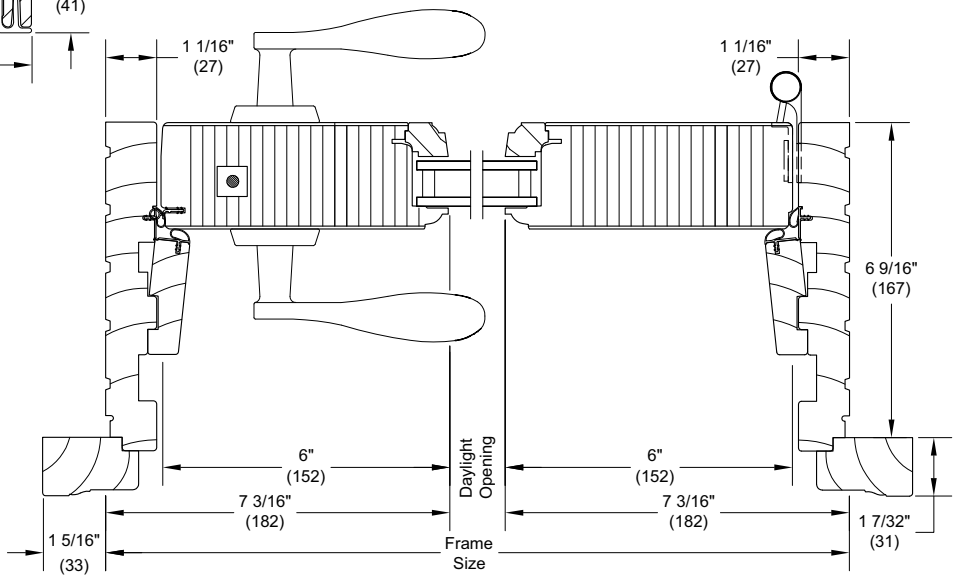

X R Jamb - RT6

Inswing Section Details: Stationary and Sidelite

Scale: 3" = 1' 0"

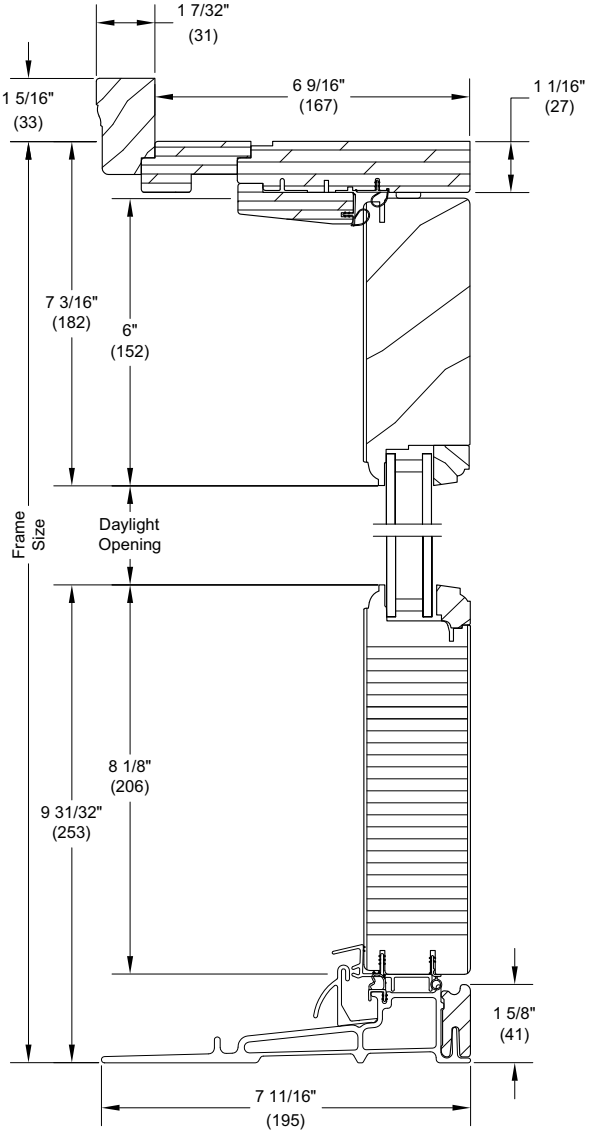

Head Jamb and Sill

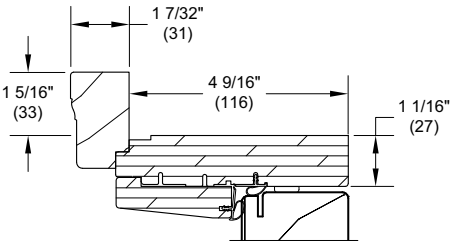

4 9/16" Head Jamb

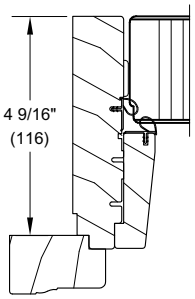

4 9/16" Jamb
RT2

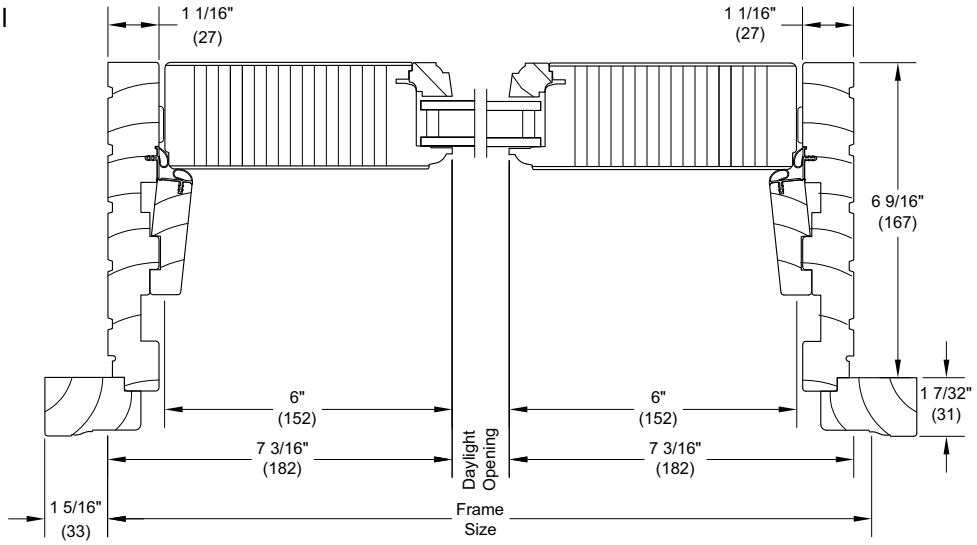

O Jamb - RT6

Inswing Section Details: Panel Configurations

Not to Scale

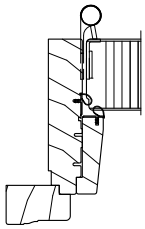

4 9/16" Jamb

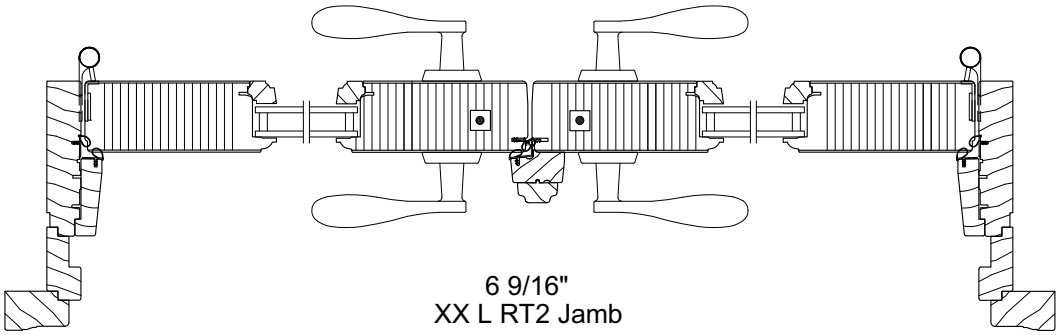

6 9/16"
XX L RT2 Jamb

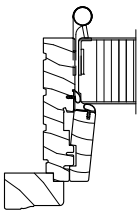

4 9/16" Jamb

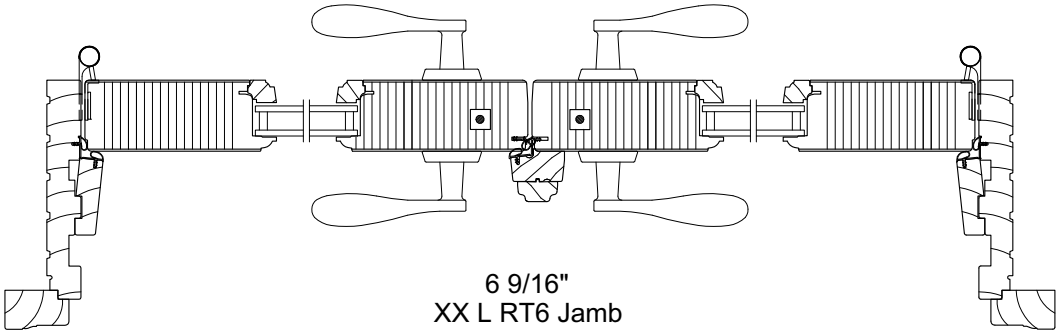

6 9/16"
XX L RT6 Jamb

Inswing Section Details: Ultimate Swinging Screen

Not to Scale

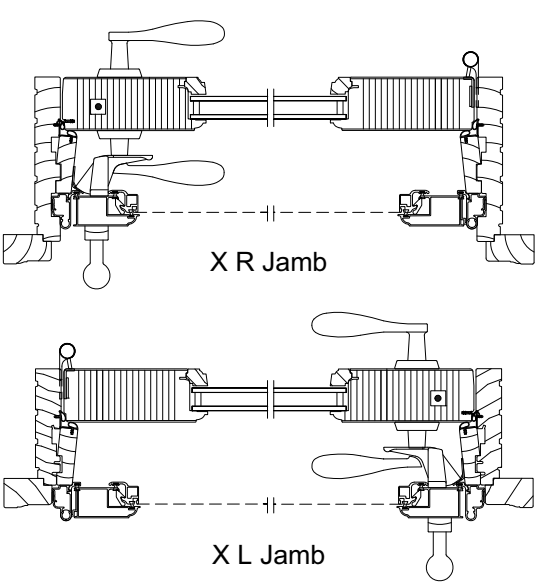

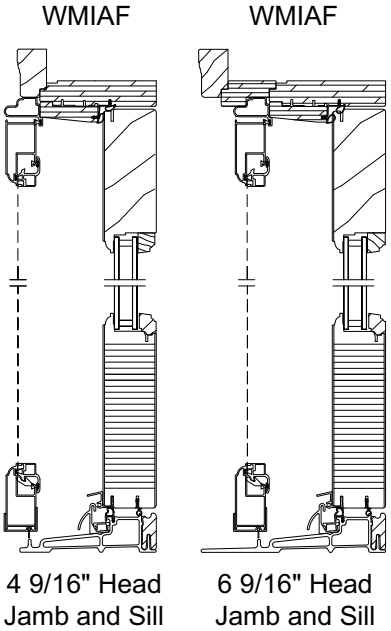

Inswing Section Details: Flat Panel Placement

Scale: 3" = 1' 0"

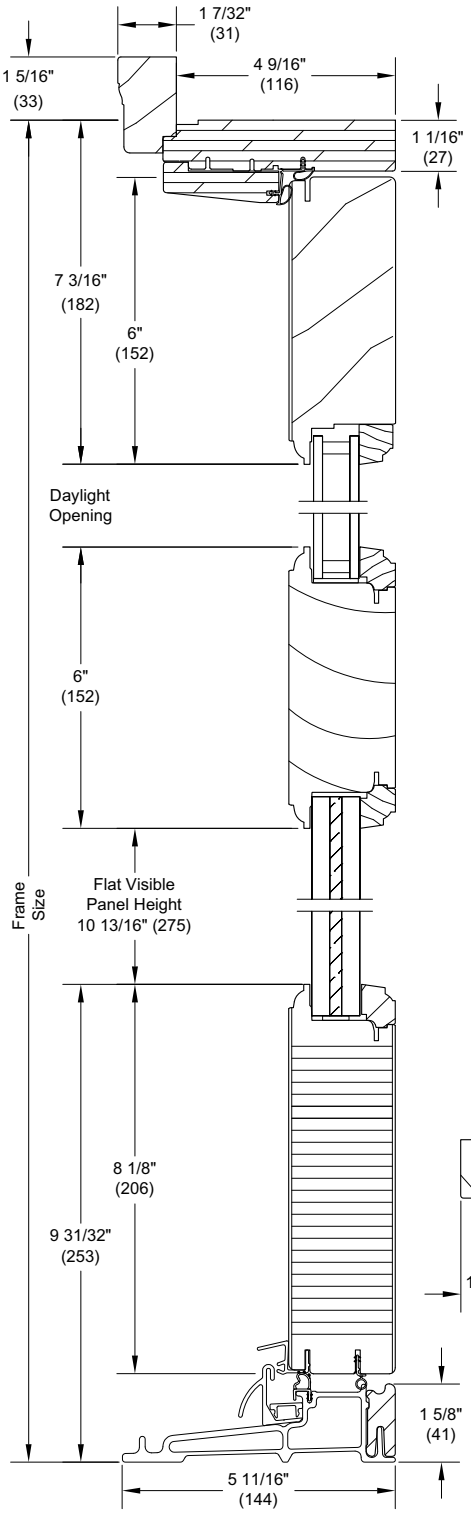

Head Jamb and Sill

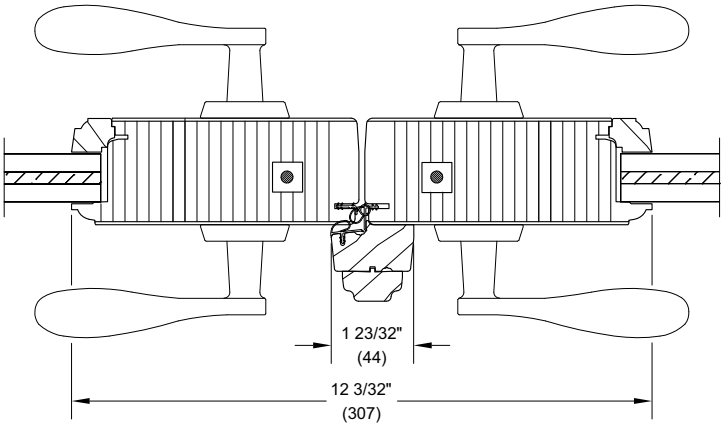

XX L Meeting Stiles

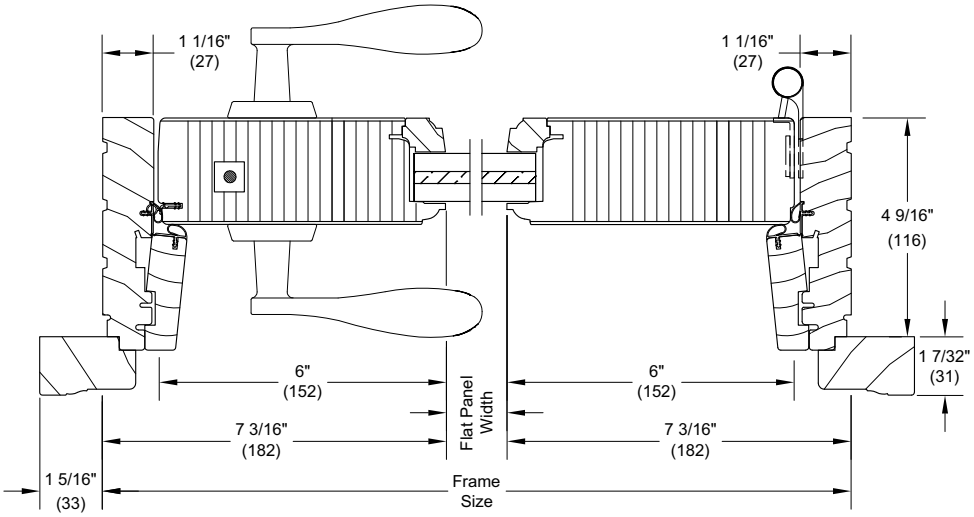

X R Jamb - RT6

Inswing Section Details: Raised Panel Placement

Scale: 3" = 1' 0"

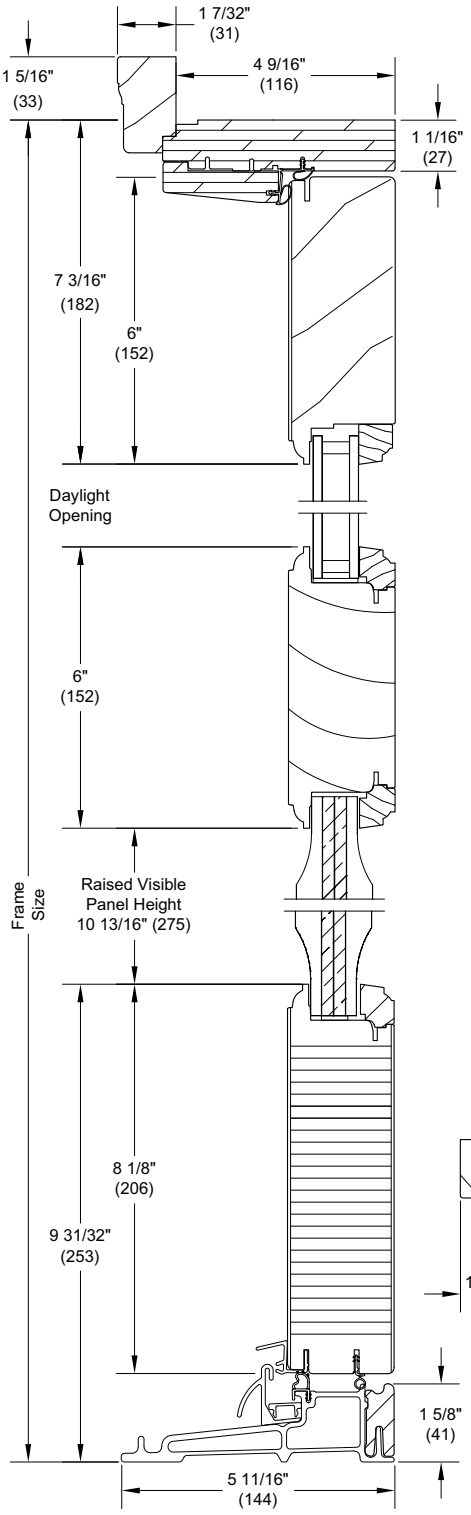

Head Jamb and Sill

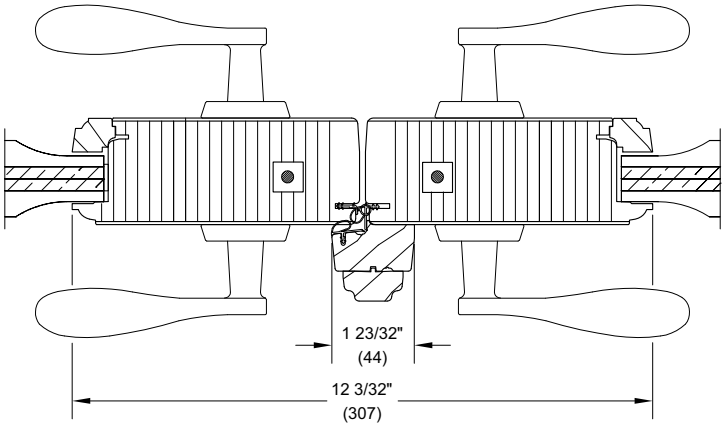

XX L Meeting Stiles

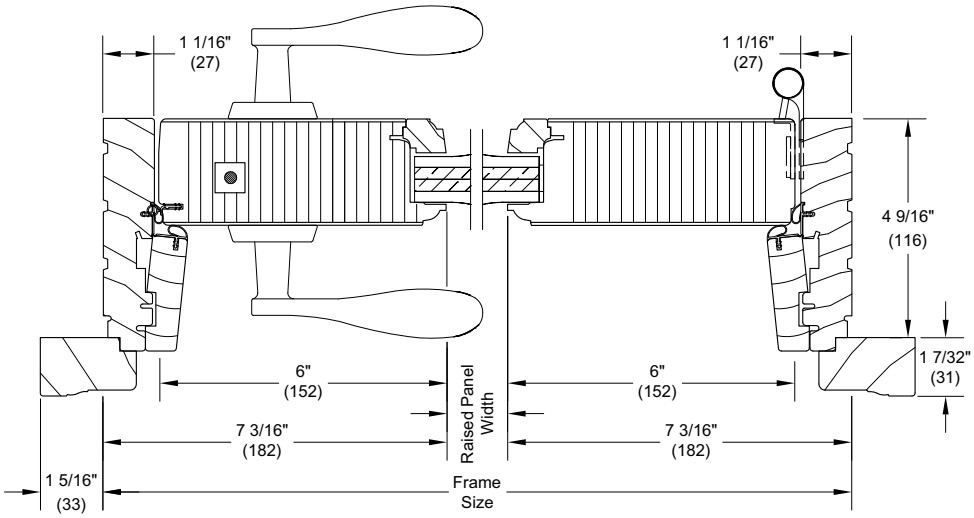

X R Jamb - RT6

Outswing Section Details: Operating

Scale: 3" = 1' 0"

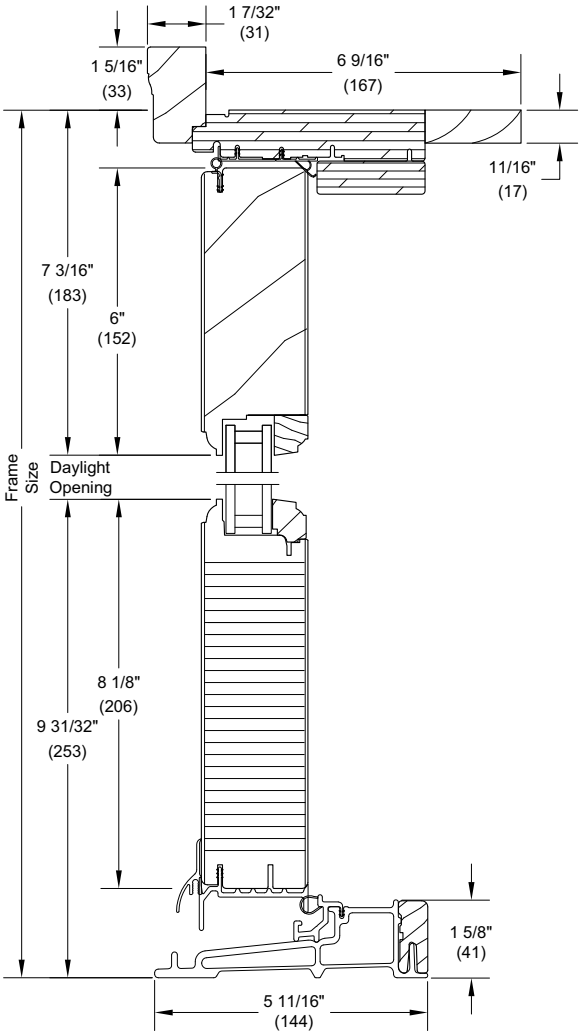

Head Jamb and Sill

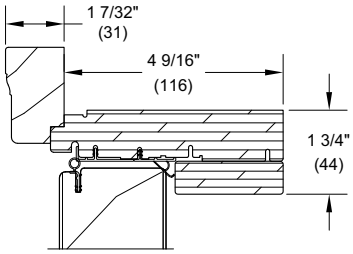

4 9/16" Head Jamb

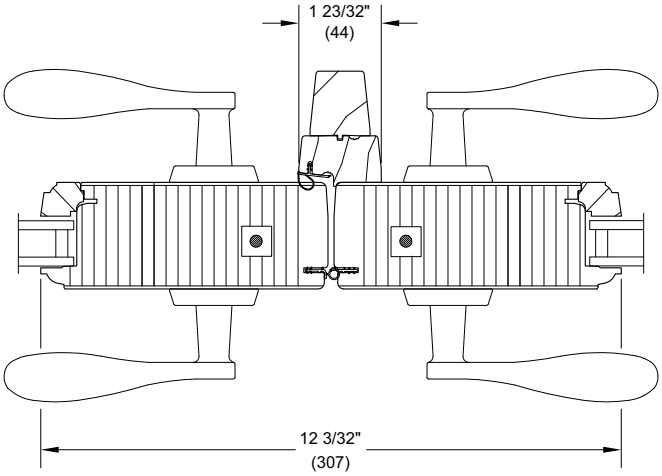

XX R - Meeting Stiles

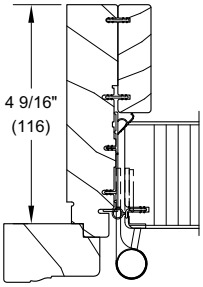

4 9/16" Jamb - RT2 & RT6

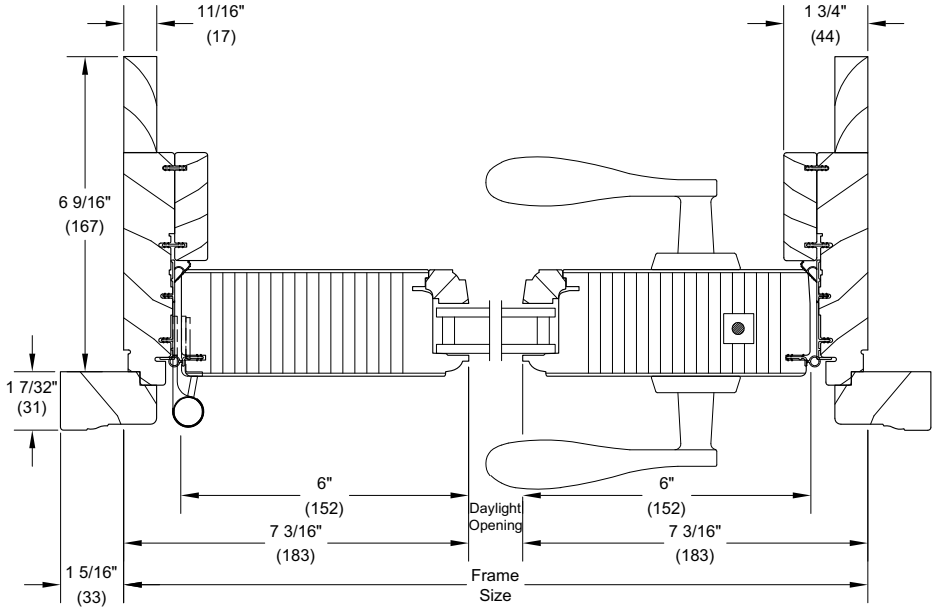

X R - Jamb - RT2 & RT6

Outswing Section Details: Stationary and Sidelite

Scale: 3" = 1' 0"

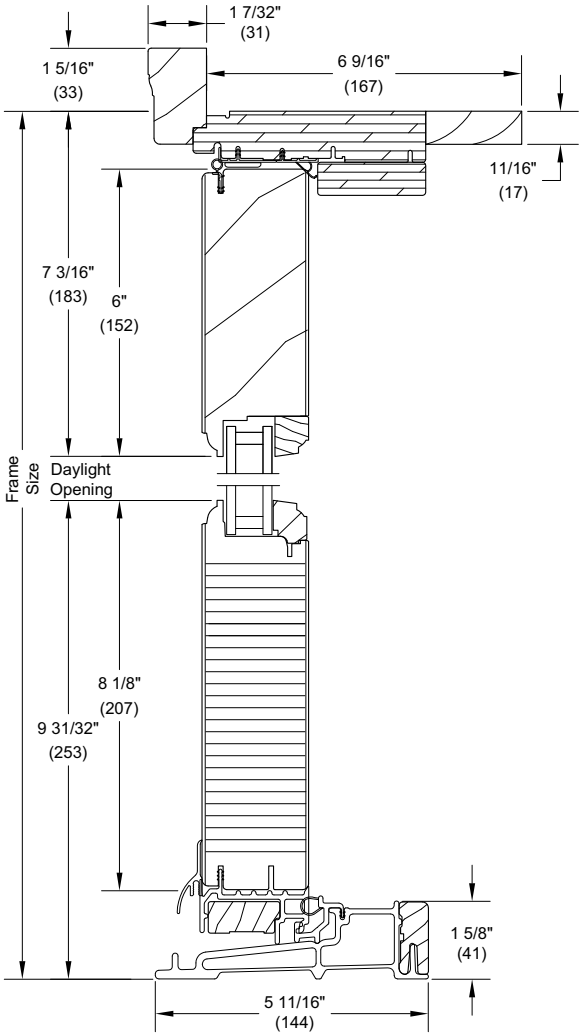

Head Jamb and Sill

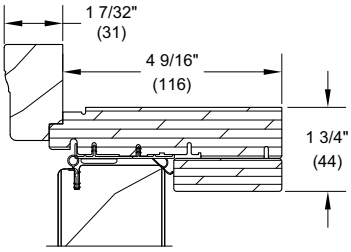

4 9/16" Head Jamb

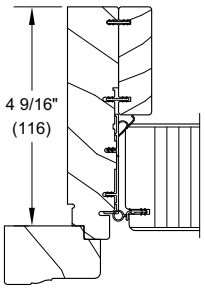

4 9/16" Jamb
RT2 & RT6

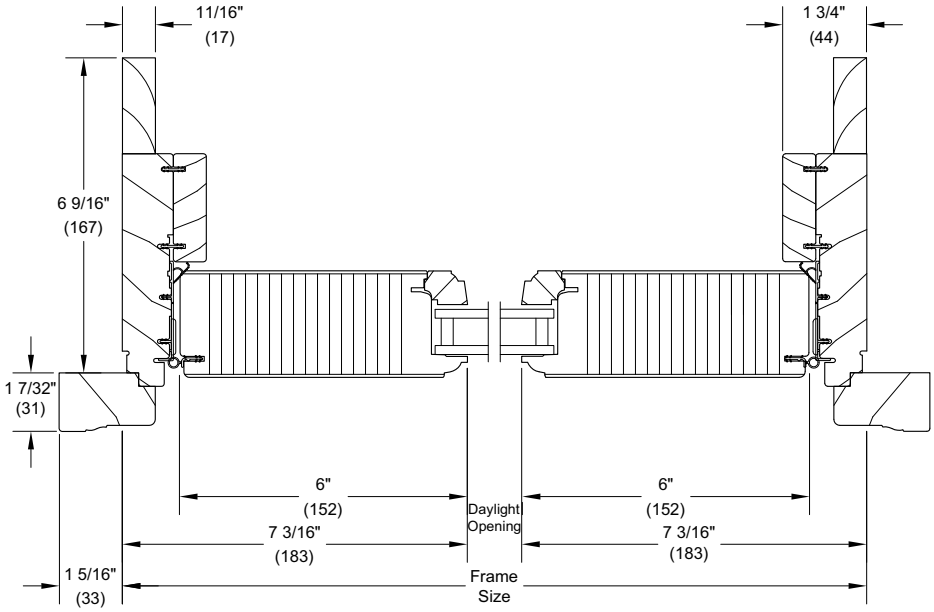

O - Jamb - RT2 & RT6

Outswing Section Details: Panel Configurations

Not to Scale

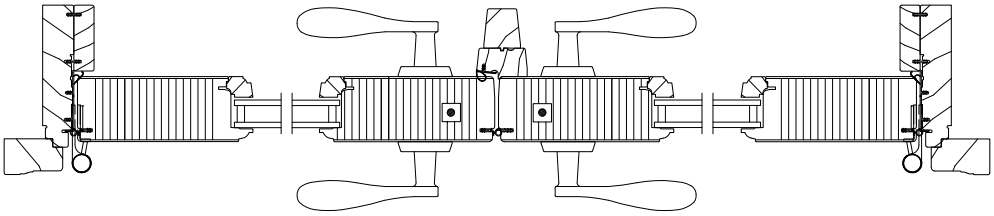

XX R 4 9/16" Jamb - RT2 & RT6

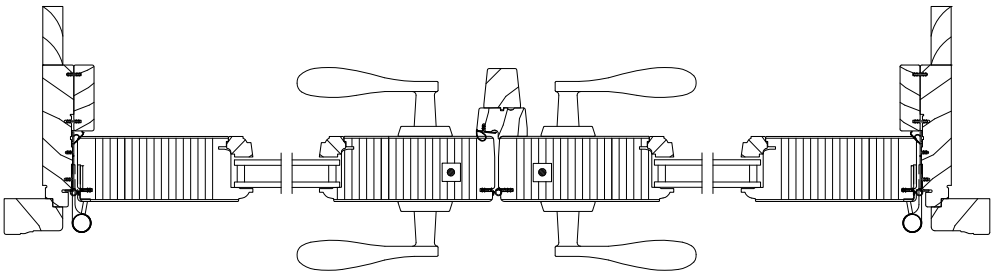

XX R 6 9/16" Jamb - RT2 & RT6

Outswing Section Details: Flat Panel Placement

Scale: 3" = 1' 0"

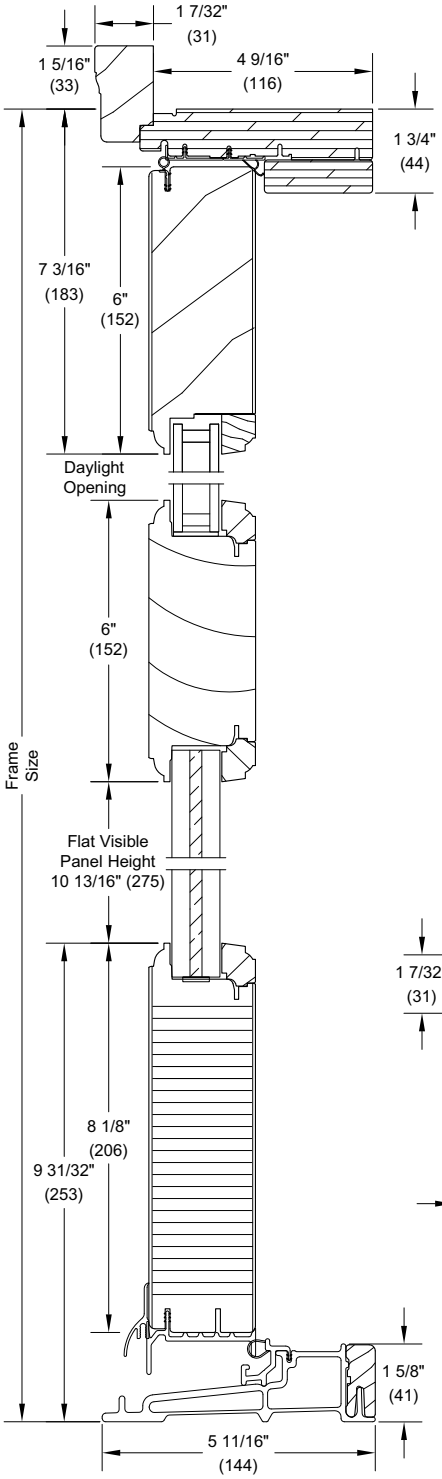

Head Jamb and Sill

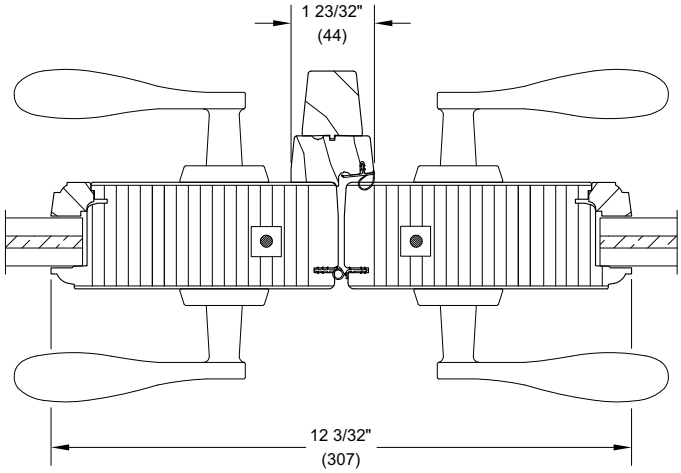

XX L - Meeting Stiles

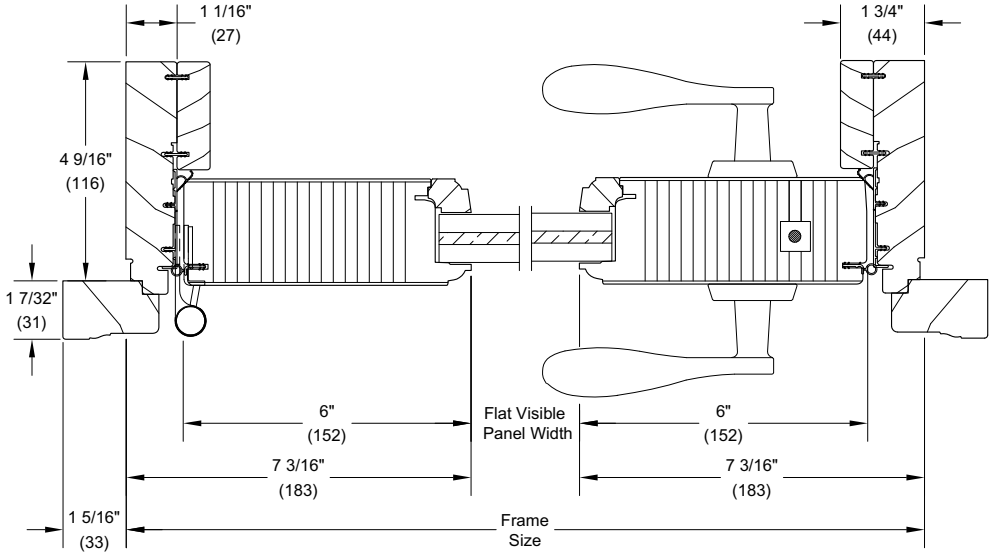

X R - Jamb - RT2 & RT6

Outswing Section Details: Raised Panel Placement

Scale: 3" = 1' 0"

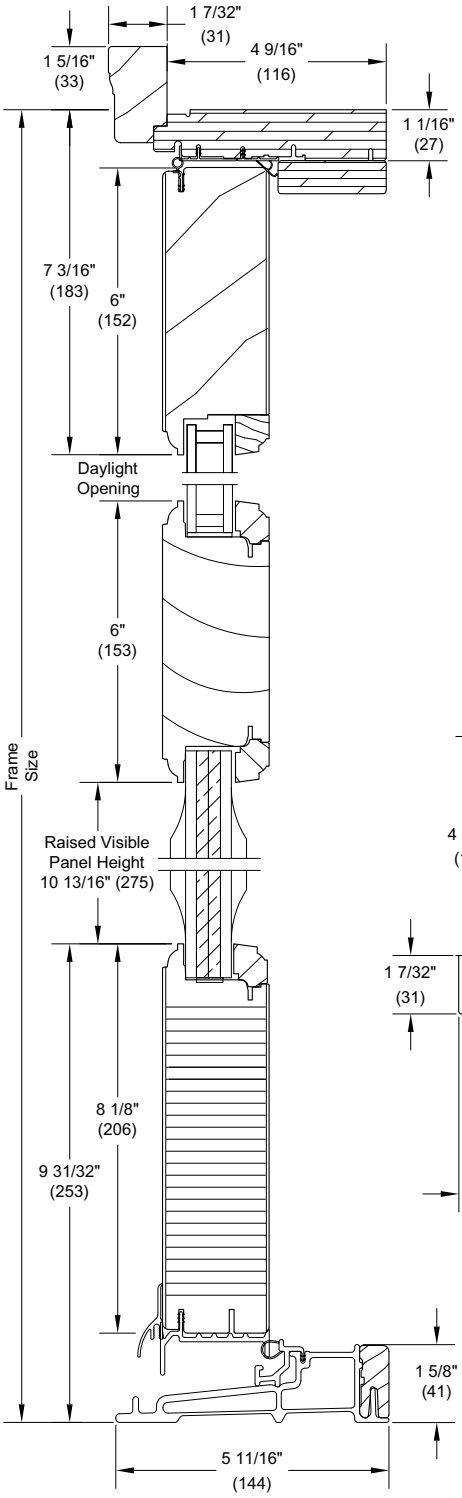

Head Jamb and Sill

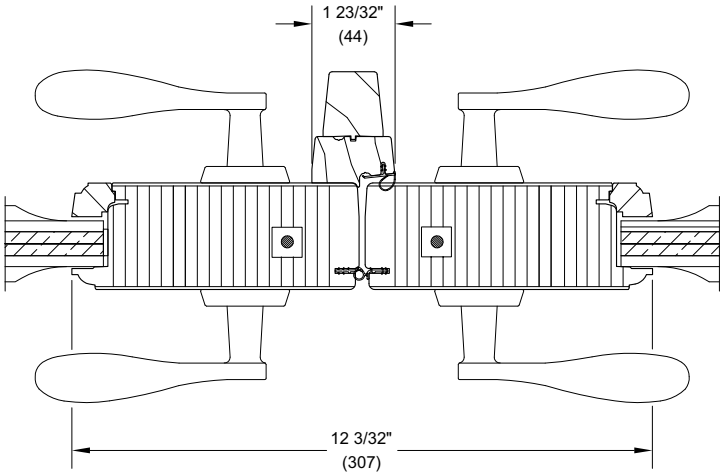

XX L - Meeting Stiles

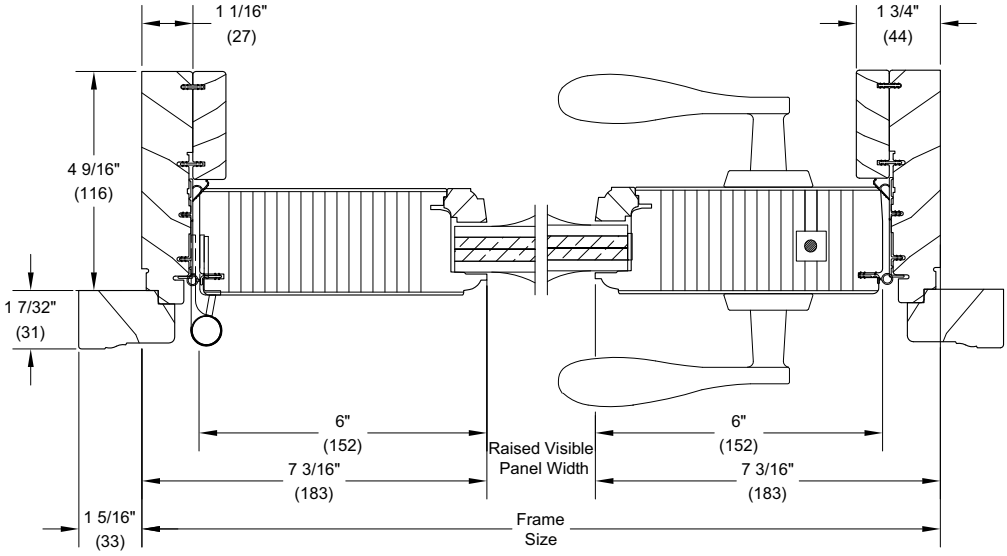

X R - Jamb - RT2 & RT6