Wood Ultimate Insert Double Hung

Unit Features 1
Standard Insulating Glass Divided Lite Option 3
Standard Single Glaze Divided Lite Option 4
Optional Interior Square Simulated Divided Lite 5
Egress and Vent Openings 6
Minimum and Maximum Guidelines, Certified Sizes and Ratings, Oversize Limits 7
Measurement Conversions: Operators 8
Measurement Conversions: Transom and Picture 9
Measurement Conversions: Field Measurement 10
Section Details: Mullions 14

Unit Features

Wood Ultimate Insert Double Hung: WINDH

Wood Ultimate Transom Windows: WINDHT

Wood Ultimate Picture Windows: WINDHP

Frame:

- Depth is 4 9/16″ (116)
- 11/16″ (17) thick at head and side jambs, 1″ (25) at sill which has an 8° bevel.
- Optional flat sill that is 1 7/16″ (37).

Sash:

- Sash thickness for operable units and transom: 1 5/8″ (41). Sash thickness for a picture unit is 1 5/8 (41) or 2″ (51).
- Operating sash are removable for cleaning, service and finishing.
- Incorporates traditional wide bottom rail in bottom sash - 3 9/16" (90).
- Single Hung conversion kits available. Cottage and Oriel sash configuration available.

Hardware:

- Sash lock and keeper: Open style crescent cam lock with sash release lever, surface mounted. Color: Satin Taupe. Optional colors: Bronze, White, Brass, Antique Brass, Satin Chrome, Satin Nickel and Oil Rubbed Bronze.
- Balance system: block and tackle coil spring.
- The jamb track is a vinyl extrusion. Color: Beige. Optional color: White.

Weather Strip:

- Jamb weather strip is a foam type weather strip which seals against both the bottom sash and top sash stiles.
- Top sash has a weather strip on the checkrail that seals to the bottom sash checkrail when the sash lock is engaged.
- The top rail seals against a weather strip on the head jamb parting stop.
- The bottom sash has a weather strip on the bottom of the lower rail which seals against the sill.

Insect Screens:

- Aluminum screen: Full Screen standard, half screen optional.
- Screen mesh: Standard is Charcoal fiberglass. Optional: Charcoal High Transparency screen mesh (CH-HI-Tran) fiberglass, Charcoal aluminum wire, Black aluminum wire, Bright Bronze wire.
- Exterior filler trim for the sides and top, along with an exterior sill trim kit are available to install a screen when the Insert is being installed from the exterior.
- Optional Double Hung Magnum screen

Glass:

- Glazing seal: Silicone glazed.
- Standard glass is insulating LoĒ²272® with Argon or Air.
- Insulating glass will be altitude adjusted with capillary tubes for higher elevations. Argon gas is not available for elevations that require capillary tubes.

Optional Glass

- LoĒ180™ with Argon or Air, LoĒ 366® with Argon or Air, clear, tints, tempered, obscure and others.
- LoĒ 366® with Argon or Air, LoĒ180™ with Argon or Air, Laminated, Tempered, Obscure, Bronze tint, Gray tint, Reflective Bronze or clear.
- 1" Tri-pane LoĒ-180™ outer piece and LoĒ-180™ inner piece with Argon
- 1" Tri-pane LoĒ-180™ outer piece and LoĒ-180™ inner piece with Krypton/Argon
- 1" Tri-pane LoĒ²272® outer piece and LoĒ²272® inner piece with Argon
- 1" Tri-pane LoĒ²272® outer piece and LoĒ²272® inner piece with Krypton/Argon
- 1" Tri-pane LoĒ 366® outer piece and LoĒ-180™ inner piece with Argon
- 1" Tri-pane LoĒ 366® outer piece and LoĒ-180™ inner piece with Krypton/Argon

Unit Features

Accessories:

- Installation Accessories
  - Factory installed vinyl sill fin (8 degree sill option only)
  - Two (2) 5/16″ - #10 x 2 1/2″ jamb jack screws
  - Four (4) #7 x 2″ Phillips pan-head installation screws
  - Two (2) jamb liner check rail pads
  - Two (2) wood flat head plugs (interior).
- Sash Lifts
  - High pressure zinc die-cast.
  - Color: Satin Taupe. Optional colors: Bronze, White, Brass, Antique Brass, Satin Chrome, Satin Nickel and Oil Rubbed Bronze.

Standard Insulating Glass Divided Lite Option

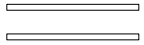

Insulating Glass

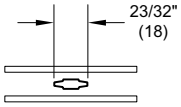

Aluminum 11/16"
Contour GBG

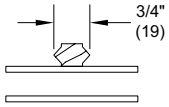

3/4" Grille

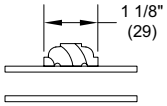

1 1/8" Grille

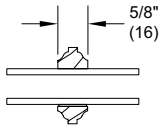

5/8" SDL

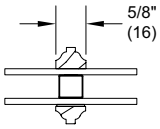

5/8" SDL
W/Spacer

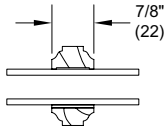

7/8" SDL

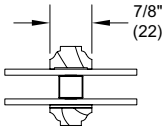

7/8" SDL
W/Spacer Bar

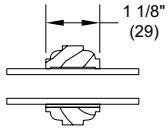

1 1/8" SDL

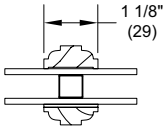

1 1/8" SDL
W/Spacer Bar

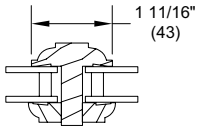

1 11/16" IG ADL

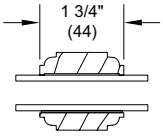

1 3/4" SDL

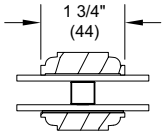

1 3/4" SDL
W/One Spacer Bar

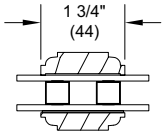

1 3/4" SDL
W/Two Spacer Bars

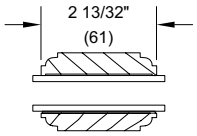

2 13/32" SDL

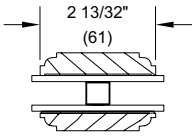

2 13/32" SDL
W/One Spacer Bar

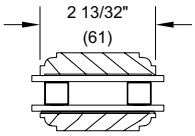

2 13/32" SDL
W/Two Spacer Bar

Standard Single Glaze Divided Lite Option

Single Glaze

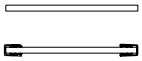

Single Glaze
W/ Energy Panel

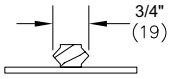

3/4" Grille

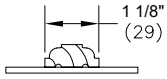

1 1/8" Grille

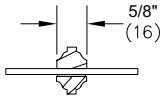

5/8" SDL

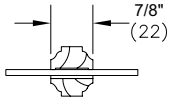

7/8" SDL

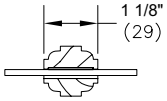

1 1/8" SDL

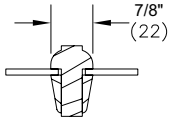

7/8" SG-ADL

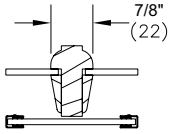

7/8" SG-ADL
W/ Energy Panel

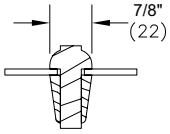

7/8" SG-ADL
Full Depth Munt

Optional Interior Square Simulated Divided Lite

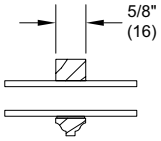

5/8" SDL

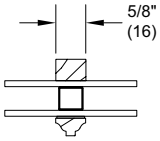

5/8" SDL
W/Spacer

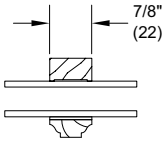

7/8" SDL

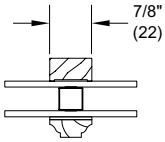

7/8" SDL
W/Spacer Bar

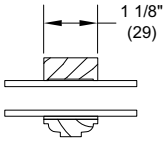

1 1/8" SDL

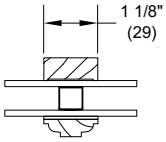

1 1/8" SDL
W/Spacer Bar

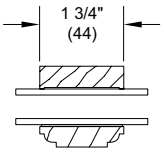

1 3/4" SDL

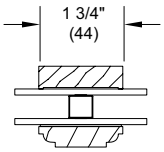

1 3/4" SDL
W/One Spacer Bar

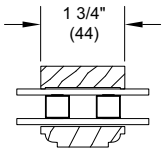

1 3/4" SDL
W/Two Spacer Bars

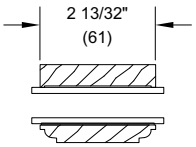

2 13/32" SDL

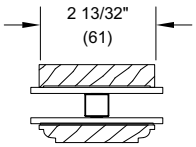

2 13/32" SDL
W/One Spacer Bar

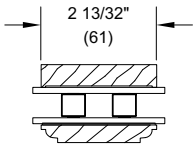

2 13/32" SDL
W/Two Spacer Bar

Egress and Vent Openings

Minimum Egress Requirements					
Inside Opening Width		Inside Opening Height Flat Sill		Inside Opening Height 8 Degree Sill Option	
in	mm	in	mm	in	mm
29 3/4	(756)	77 1/4	(1962)	76 13/16	(1951)
31 3/4	(806)	73 1/4	(1861)	72 13/16	(1850)
33 3/4	(857)	69 1/4	(1759)	68 13/16	(1748)
35 3/4	(908)	65 1/4	(1657)	64 13/16	(1647)
37 3/4	(959)	61 1/4	(1556)	60 13/16	(1545)
41 3/4	(1060)	61 1/4	(1556)	60 13/16	(1545)
45 3/4	(1162)	61 1/4	(1556)	60 13/16	(1545)

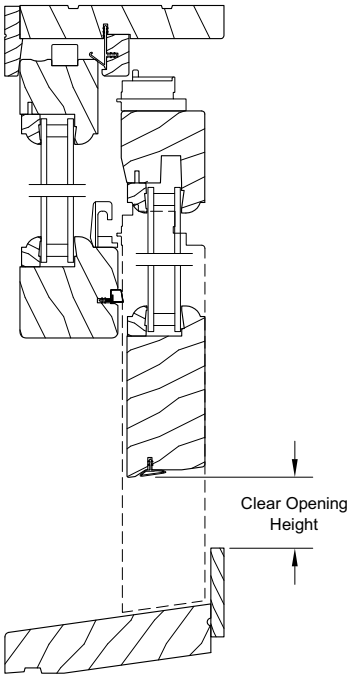

Head Jamb and Sill

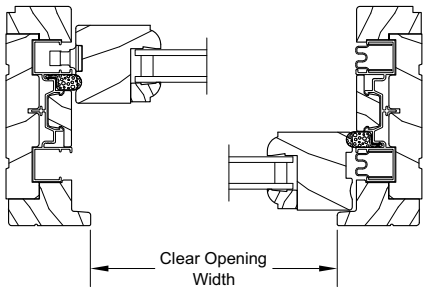

Jambs

Minimum and Maximum Guidelines, Certified Sizes and Ratings, Oversize Limits

Minimum and Maximum Rough Opening Guidelines													
Unit Type		Width		x	Height		Width		x	Height		Max Glass	
		in	mm	×	in	mm	in	mm	×	in	mm	Sq. Feet	Sq. Meters
WINDH	Insulating Glass	13 3/4	(349)	×	23 21/32	(601)	48	(1219)	×	85 19/32	(2174)	10	0.929
WINDHT	Insulating Glass	13 3/4	(349)	×	13 1/8	(333)	48	(1219)	×	23	(584)	5	0.465
WINDHP	Insulating Glass	13 5/8	(346)	×	14 7/32	(361)	68	(1727)	×	85 19/32	(2174)	34	3.159

Certified Sizes and Ratings				
Unit Type	Frame Size Height		Frame Size Width	
			in	mm
	in	mm	45	(1143)
WINDH	77 3/8	(1965)	LC-PG30	

Certified Sizes and Ratings				
Unit Type	Frame Size Height		Frame Size Width	
			in	mm
	in	mm	75 5/8	(1921)
WINDHT	27 5/8	(702)	LC-PG40	

Certified Sizes and Ratings				
Unit Type	Frame Size Height		Frame Size Width	
			in	mm
	in	mm	68	(1727)
WINDHP	77 5/8	(1972)	CW-PG40	

Oversize Limts							
Unit Type	Maximum IO Width			Maximum IO Height		Maximum IO Area	
	in	mm	x	in	mm	Sq Feet	Sq Meters
WINDH	48	(1219)	x	85 19/32	(2174)	23 23/32	(2)
WINDHT	68	(1727)	x	23 1/16	(586)	7 11/16	(1)
WINDHP	48	(1219)	x	85 19/32	(2174)	23 23/32	(2)

NOTE: Maximum size allowed in either width or height, but not both; subject to maximum per sash glass area of 10ft^2.

Measurement Conversions: Operators

Wood Ultimate Insert Double Hung Operating Unit						
Unit Measurements		Width		Height		
From	To					
Daylight Opening		**in**	**mm**		**in**	**mm**
Daylight Opening	Bottom Sash OM	+ 3 17/32	(90)		+ 5 11/16	(144)
Daylight Opening	Top Sash OM	+ 3 17/32	(90)		+ 3 7/8	(98)
Daylight Opening	Glass OM	+ 1 1/16	(27)		+ 1 1/16	(27)
Daylight Opening	Screen OM	+ 4 13/32	(112)	(DLO x 2)	+ 9 9/32	(236)
Daylight Opening	Grille	order by DLO		order by DLO		

Wood Ultimate Insert Double Hung Operating Unit								
Unit Measurements		Width		Height				
From	To			Flat Bottom Sill				
Inside Opening		**in**	**mm**	**in**	**mm**		**in**	**mm**
Inside Opening	Bottom Sash OM	-3 9/32	(83)	-10 9/32	(261)	÷ 2	+ 5 11/16	(98)
Inside Opening	Top Sash OM	-3 9/32	(83)	-10 9/32	(261)	÷ 2	+ 3 7/8	
Inside Opening	Daylight Opening	-6 13/16	(173)	-10 9/32	(261)	÷ 2		
Inside Opening	Glass OM	-5 3/4	(146)	-8 5/32	(207)	÷ 2		
Inside Opening	Screen OM	-1 27/32	(47)	-1	(25)			
Inside Opening	Frame OM @ Interior	-3/8	(10)	-1/4	(06)			
Inside Opening	Frame OM @ Exterior	-3/8	(10)	-1/4	(06)			

Height				
8 Degree Bottom Sill				
in	**mm**		**in**	**mm**
-9 27/32	(250)	÷ 2	+ 5 11/16	(144)
-9 27/32	(250)	÷ 2	+ 3 7/8	(98)
-9 13/16	(249)	÷ 2		
-7 23/32	(196)	÷ 2		
-9/16	(14)			
-1/4	(06)			
+ 3/16	(05)			

Measurement Conversions: Transom and Picture

Wood Ultimate Insert Double Hung Transoms					
Unit Measurements		Width		Height (not affected by sill)	
From	To				
Daylight Opening		**in**	**mm**	**in**	**mm**
Daylight Opening	Sash OM	+ 3 17/32	(90)	+ 4 11/32	(110)
Daylight Opening	Glass OM	+ 1 1/16	(27)	+ 1 1/16	(27)
Daylight Opening	Grille	order by DLO		Order by DLO	

Unit Measurements		Width		Height			
From	To			Flat Sill Bottom		8 Degree Sill Bottom	
Inside Opening		**in**	**mm**	**in**	**mm**	**in**	**mm**
Inside Opening	Sash OM	-3 9/32	(83)	-2 11/32	-(60)	-1 29/32	(48)
Inside Opening	Daylight Opening	-6 13/16	(173)	-6 11/16	-(170)	-6 1/4	(159)
Inside Opening	Glass OM	-5 3/4	(146)	-5 5/8	-(143)	-5 3/16	(132)
Inside Opening	Frame OM @ Interior	-3/8	(10)	-1/4	-(06)	-1/4	(06)
Inside Opening	Frame OM @ Exterior	-3/8	(10)	-1/4	-(06)	+ 3/16	(05)

Wood Ultimate Insert Double Hung Picture					
Unit Measurements		Width		Height (not affected by sill type)	
From	To				
Daylight Opening		**in**	**mm**	**in**	**mm**
Daylight Opening	Sash OM	+ 4 7/8	(124)	+ 5 21/32	(144)
Daylight Opening	Glass OM	+ 1 3/16	(30)	+ 1 3/16	(30)
Daylight Opening	Grille	order by DLO		order by DLO	

Unit Measurements		Width		Height			
From	To			Flat Sill Bottom		8 Degree Sill Bottom	
Inside Opening		**in**	**mm**	**in**	**mm**	**in**	**mm**
Inside Opening	OM of BMC	-1 15/16	(49)	-2 1/4	(57)	-1 13/16	(46)
Inside Opening	OM of Flat Casing	-6 13/16	(173)	-7 29/32	(201)	-7 15/32	(190)
Inside Opening	Daylight Opening	-5 5/8	(143)	-6 23/32	(171)	-6 9/32	(160)
Inside Opening	OM of Frame	-3/8	(10)	-1/4	(06)	-1/4	(06)
Inside Opening	Daylight Opening	-3/8	(10)	-1/4	(06)	+ 3/16	(05)

Measurement Conversions: Field Measurement

Conversion from Field Measurement to Frame OM		
Width		
Condition	Formula	
If blind stop width is 1/2 inch or less	WINDH frame OM width = inside opening width - 0.375	
Height		
Condition	Type of Sill	Formula
If old sill angle is less than 8 degrees	Flat bottom Sill	WINDH frame OM height = inside opening height - 0.250
If old sill angle is equal to or greater than 8 degrees	8 degree bottom sill	WINDH frame OM height = inside opening height + 0.180

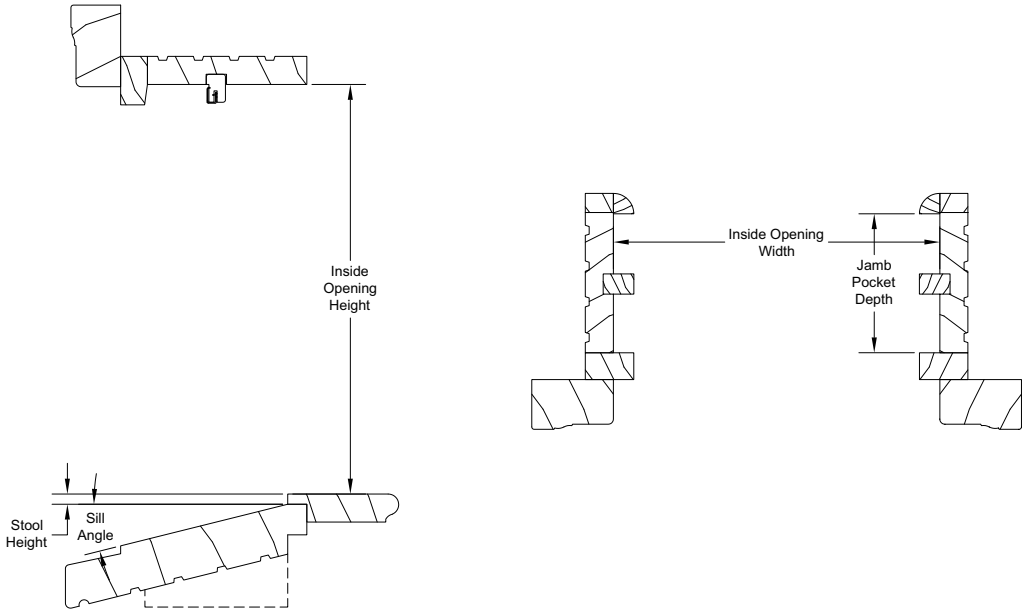

NOTE: For additional measuring instructions see Marvin Insert Window Measuring Instructions.

Section Details: Operator

Scale: 3" = 1' 0"

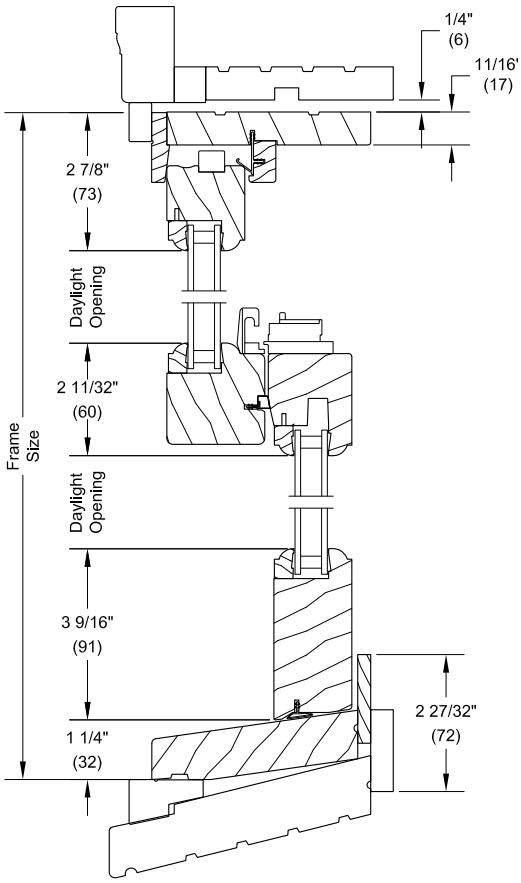

Head Jamb, Checkrail, with Beveled Sill installed in existing frame

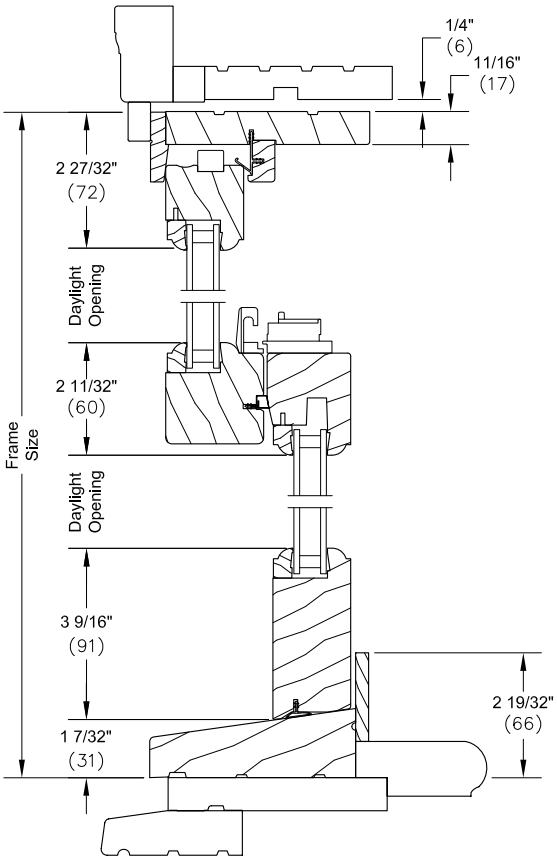

Head Jamb, Checkrail, with Flat Sill Option installed in existing frame

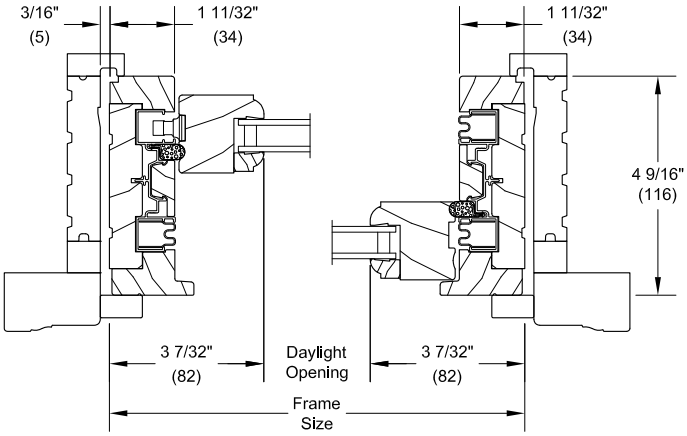

Jambs installed in existing frame

Section Details: Transom

Scale: 3" = 1' 0"

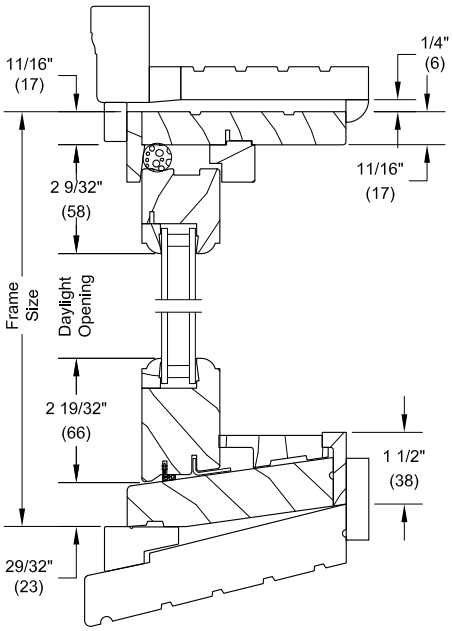

Transom Head Jamb with Beveled Sill installed in existing frame

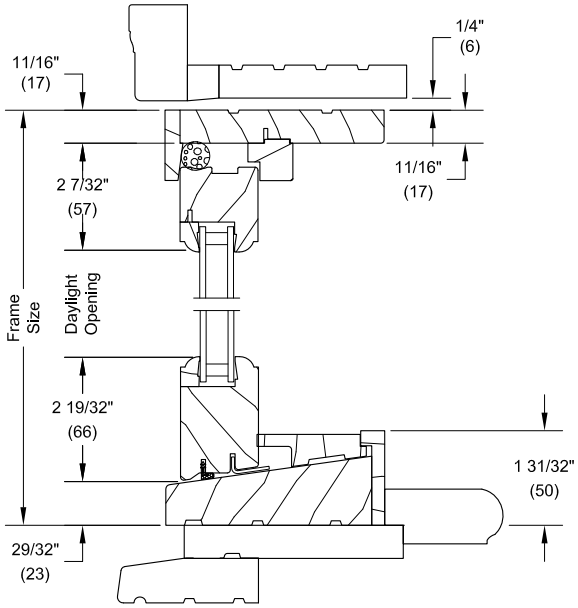

Transom Head Jamb with Flat Sill Option installed in existing frame

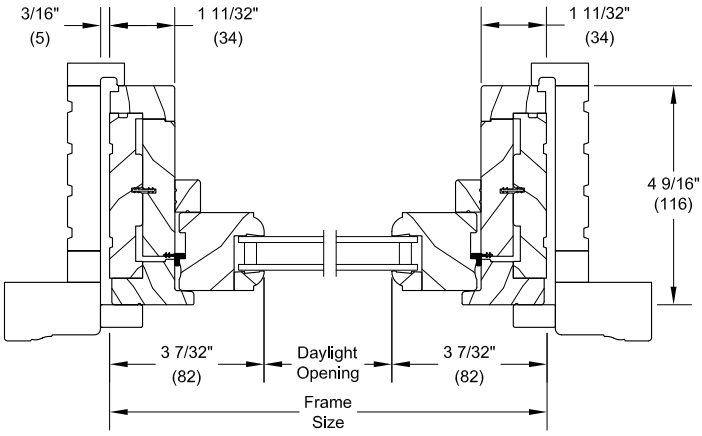

Transom Jambs installed in existing frame

Section Details: Picture

Scale: 3" = 1' 0"

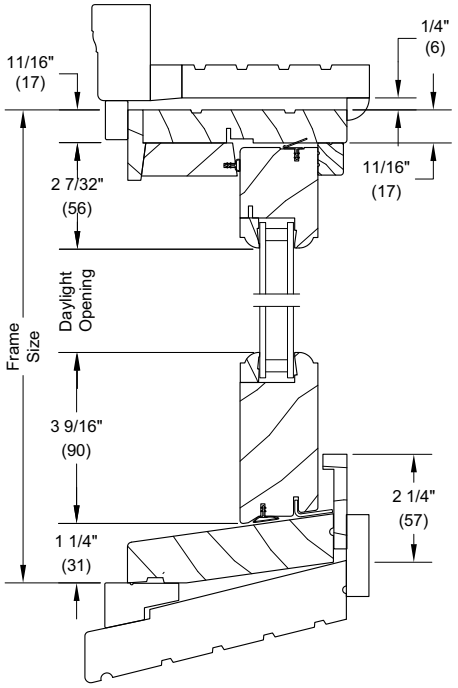

Picture Head Jamb with Beveled Sill installed in existing frame

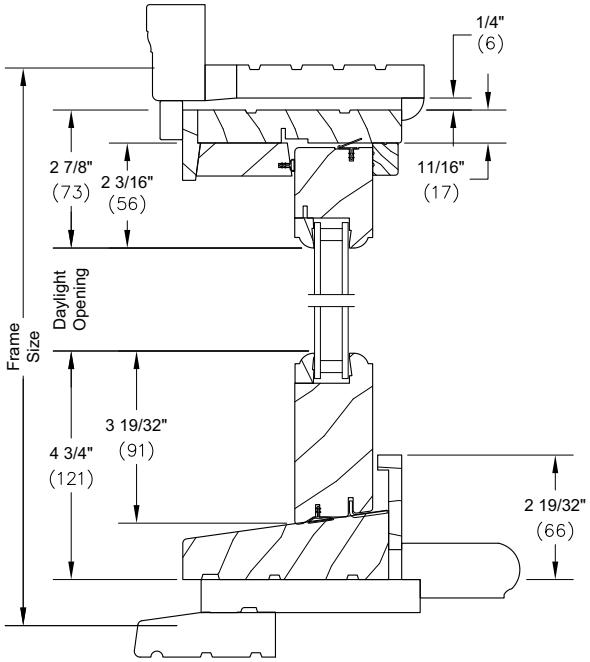

Picture Head Jamb with Flat Sill Option installed in existing frame

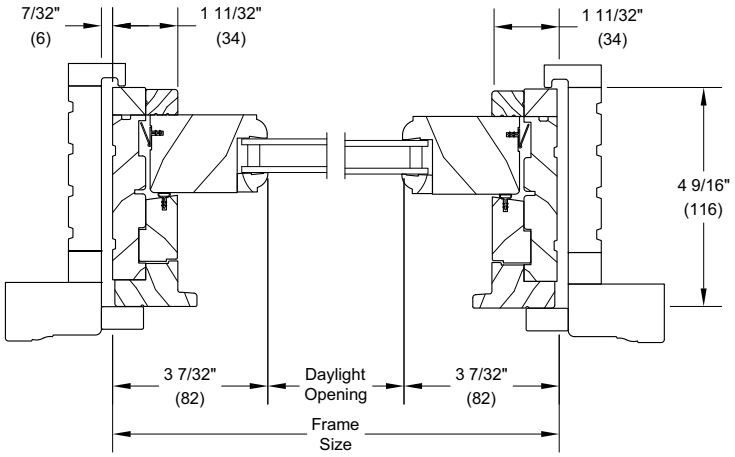

Jambs

Section Details: Mullions

Scale: 3" - 1' 0"

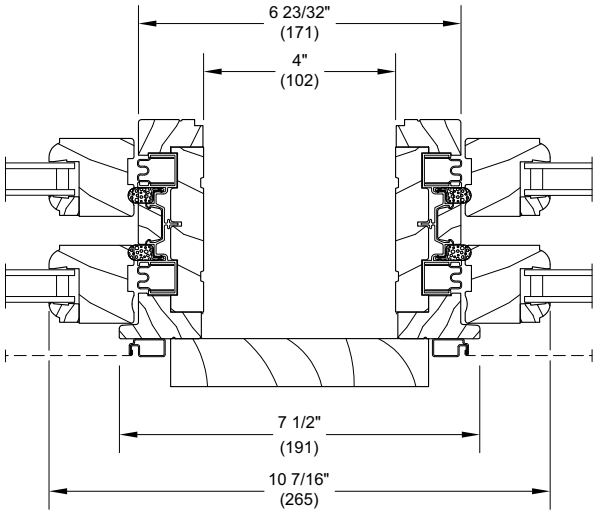

Vertical Mullion - with 4" Space Mull
Operator/Operator

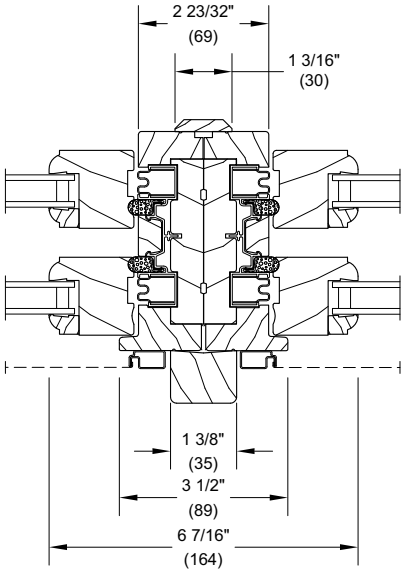

Vertical Mullion
Operator/Operator/Direct Mull

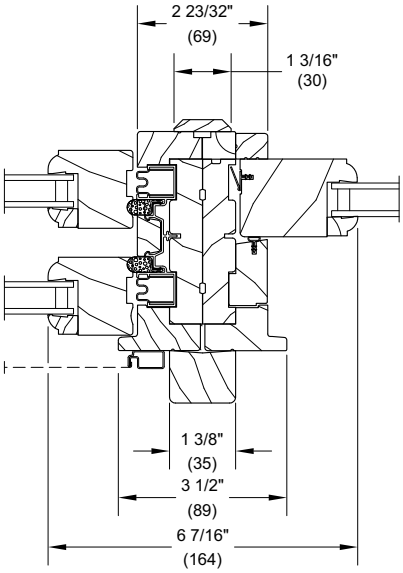

Vertical Mullion
Operator/Picture/Direct Mull