DIRECT GLAZE DOOR TRANSOMS

1/0 HEIGHT (1/2 AND 1/6 HEIGHTS SEE BELOW)

Clad Mas. Opg. (mm)	2-1 15/16 (659)	2-7 15/16 (811)	2-9 15/16 (862)	3-1 15/16 (964)	3-7 15/16 (1116)	5-1 1/8 (1553)
Wood Mas. Opg. (mm)	2-4 9/16 (726)	2-10 9/16 (878)	3-0 9/16 (929)	3-4 9/16 (1030)	3-10 9/16 (1183)	5-3 3/4 (1619)
Rgh. Opg. (mm)	2-2 7/16 (672)	2-8 7/16 (824)	2-10 7/16 (875)	3-2 7/16 (976)	3-8 7/16 (1129)	5-1 5/8 (1565)
Frame Size (mm)	2-1 7/16 (646)	2-7 7/16 (799)	2-9 7/16 (849)	3-1 7/16 (951)	3-7 7/16 (1103)	5-0 5/8 (1540)
Glass Size (mm)	23 7/8 (606)	29 7/8 (759)	31 7/8 (810)	35 7/8 (911)	41 7/8 (1064)	59 1/16 (1500)
1-1/4 (311) 1-2 1/4 (362) 1-1/2 (318) 1-0 (305) 10 7/16 (265)	2010 2012 2016	2610 2612 2616	2810 2812 2816	3010 3012 3016	3610 3612 3616	5010 5012 5016

Clad Mas. Opg. (mm)	5-5 1/8 (1654)	6-1 1/8 (1857)	7-1 1/8 (2161)	8-1 1/8 (2467)
Wood Mas. Opg. (mm)	5-7 3/4 (1721)	6-3 3/4 (1924)	7-3 3/4 (2229)	8-3 3/4 (2534)
Rgh. Opg. (mm)	5-5 5/8 (1667)	6-1 5/8 (1870)	7-1 5/8 (2175)	8-1 5/8 (2480)
Frame Size (mm)	5-4 5/8 (1641)	6-0 5/8 (1845)	7-0 5/8 (2149)	8-0 5/8 (2454)
Glass Size (mm)	63 1/16 (1602)	71 1/16 (1805)	83 1/16 (2110)	95 1/16 (2415)
1-1/4 (311) 1-2 1/4 (362) 1-1/2 (318) 1-0 (305) 10 7/16 (265)	5410 5412 5416	6010 6012 6016	7010 7012 7016	8010 8012 8016

1/2 AND 1/6 HEIGHTS:

	1/2 Height	1/6 Height
Clad Mas. Opg. (mm)	1-2 1/4 (362)	1-6 1/4 (464)
Wood Mas. Opg. (mm)	1-4 1/4 (413)	1-8 1/4 (514)
Rgh. Opg. (mm)	1-2 1/2 (368)	1-6 1/2 (470)
Frame Size (mm)	1-2 (356)	1-6 (457)
Glass Size (mm)	12 7/16" (316)	16 7/16" (418)

CONSTRUCTION DETAILS

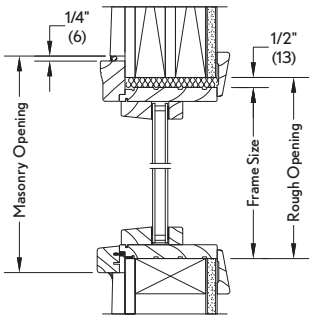

WOOD DIRECT GLAZE HEAD JAMB AND SILL*

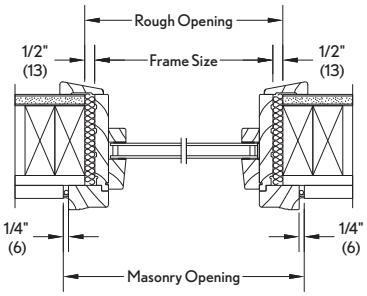

WOOD DIRECT GLAZE JAMB*

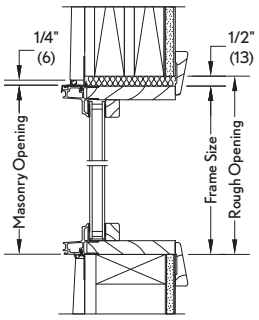

CLAD DIRECT GLAZE HEAD JAMB AND SILL

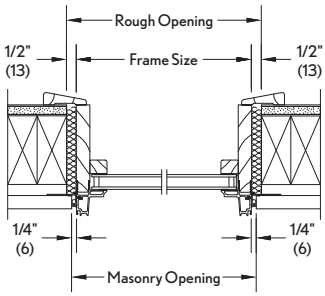

CLAD DIRECT GLAZE JAMB

WOOD DIRECT GLAZE DOOR TRANSOMS

ENERGY DATA	U-Factor	SHGC	VT	CR	ENERGY STAR®
3/4" Insulating Glass Air	0.46	0.69	0.73	45	
3/4" Insulating Glass LoĒ²-272® Air	0.30	0.37	0.64	57	N, NC
3/4" Insulating Glass LoĒ²-272® Argon	0.26	0.37	0.64	61	N, NC
3/4" Insulating Glass LoĒ³ 366® Air	0.30	0.25	0.57	58	N, NC, SC, S
3/4" Insulating Glass LoĒ³ 366® Argon	0.26	0.24	0.57	62	N, NC, SC, S

- NOTES:
- Please contact your local Marvin® representative for masonry openings that include casings and subsills.
- * Back rabbet casing shown. Non-back rabbet casing used on Wood Ultimate Inswing and Outswing French Doors

Clad Door Direct Glaze Transom: **CDRTR**
Wood Door Direct Glaze Transom: **WDRTR**

NOT TO SCALE

WOOD ROUND TOP DOORS

RT1 TRUE HALF CIRCLE STANDARD SIZES DIRECT GLAZE

Rgh. Opg. (mm)	5-0 (1524)	6-0 (1829)	5-1 5/8 (1565)	6-1 5/8 (1870)	8-1 5/8 (2480)
2-6 (762)	WDRRT50R28R	3-0 (914) WDRRT60R33R	2-6 13/16 (783) WDRRT5030	3-0 13/16 (1240) WDRRT6036	4-0 13/16 (1240) WDRRT8048

RT29 ELLIPTICAL STANDARD SIZES DIRECT GLAZE

Rgh. Opg. (mm)	5-0 (1524)	6-0 (1829)	5-1 5/8 (1565)	6-1 5/8 (1870)	8-1 5/8 (2480)
1-5 15/16 (456)	WDRRT50R14R	1-5 15/16 (456) WDRRT60R14R	1-5 15/16 (456) WDRRT5017	1-5 15/16 (456) WDRRT6017	1-9 (533) WDRRT8021

WOOD DIRECT GLAZE ROUND TOP 3/4"

ENERGY DATA	U-Factor	SHGC	VT	CR	ENERGY STAR®
3/4" Insulating Glass Air	0.46	0.67	0.71	43	
3/4" Insulating Glass Air LoĒ-180™	0.33	0.60	0.68	53	
3/4" Insulating Glass Argon LoĒ-180™	0.29	0.60	0.68	56	N
3/4" Insulating Glass LoĒ²-272® Air	0.31	0.36	0.62	54	N, NC
3/4" Insulating Glass LoĒ²-272® Argon	0.27	0.36	0.62	57	N, NC
3/4" Insulating Glass LoĒ³ 366® Air	0.30	0.24	0.56	55	N, NC, SC, S
3/4" Insulating Glass LoĒ³ 366® Argon	0.26	0.24	0.56	58	N, NC, SC, S

WOOD DIRECT GLAZE ROUND TOP 1"

ENERGY DATA	U-Factor	SHGC	VT	CR	ENERGY STAR
1" Insulating Glass Air	0.45	0.64	0.70	45	
1" Insulating Glass Air LoĒ-180™	0.31	0.57	0.67	56	N
1" Insulating Glass Argon LoĒ-180™	0.28	0.57	0.67	59	N
1" Insulating Glass LoĒ²-272® Air	0.31	0.35	0.61	50	N, NC
1" Insulating Glass LoĒ²-272® Argon	0.27	0.35	0.61	52	N, NC
1" Insulating Glass LoĒ³ 366® Air	0.30	0.24	0.55	50	N, NC, SC, S
1" Insulating Glass LoĒ³ 366® Argon	0.26	0.23	0.55	52	N, NC, SC, S
1" Tri-Pane LoĒ-180™ Argon LoĒ-180™	0.20	0.48	0.60	68	N
1" Tri-Pane LoĒ-180™ Krypton-Argon LoĒ-180™	0.17	0.48	0.60	70	N
1" Tri-Pane LoĒ²-272® Argon LoĒ²-272®	0.19	0.30	0.49	68	N, NC, SC
1" Tri-Pane LoĒ²-272® Krypton-Argon LoĒ²-272®	0.16	0.30	0.49	71	N, NC, SC
1" Tri-Pane LoĒ³ 366® Argon LoĒ-180™	0.19	0.21	0.49	68	N, NC, SC, S
1" Tri-Pane LoĒ³ 366® Krypton-Argon LoĒ-180™	0.16	0.21	0.49	71	N, NC, SC, S

CONSTRUCTION DETAILS

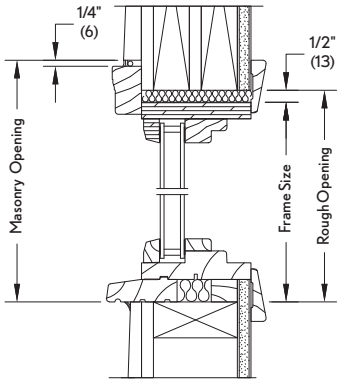

HEAD JAMB AND SILL - DIRECT GLAZE*

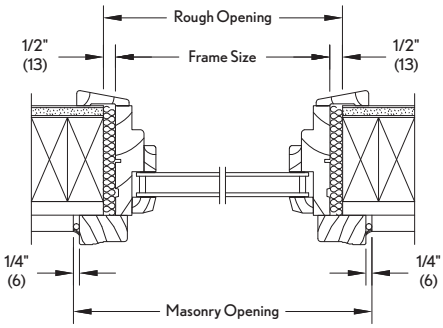

JAMB - DIRECT GLAZE*

NOTES:

- If these units are not used as transoms, add 15/16" (24) to rough opening heights for subsill.

* Non-back rabbet casing shown. Back rabbet casing used on Wood Ultimate Sliding French Doors, Wood Patio Doors, Wood 2 1/4" Inswing French Doors and Wood Commecial Doors.

NOT TO SCALE

CLAD ROUND TOP DOORS

RT1 TRUE HALF CIRCLE STANDARD SIZES DIRECT GLAZE

Rgh. Opg. (mm)	5-0 (1524)	6-0 (1829)	5-1 5/8 (1565)	6-1 5/8 (1870)	8-1 5/8 (2480)
2-6 (762)	2-1 15/16 (897)	2-6 13/16 (783)	3-0 13/16 (935)	4-0 13/16 (1240)	
CDRRT50R28R	CDRRT60R33R	CDRRT5030	CDRRT6036	CDRRT8048	

RT29 ELLIPTICAL STANDARD SIZES DIRECT GLAZE

Rgh. Opg. (mm)	5-0 (1524)	6-0 (1829)	5-1 5/8 (1565)	6-1 5/8 (1870)	8-1 5/8 (2480)
1-5 15/16 (456)	1-5 15/16 (456)	1-5 15/16 (456)	1-5 15/16 (456)	1-9 (533)	
CDRRT50R14R	CDRRT60R14R	CDRRT5017	CDRRT6017	CDRRT8021	

CONSTRUCTION DETAILS

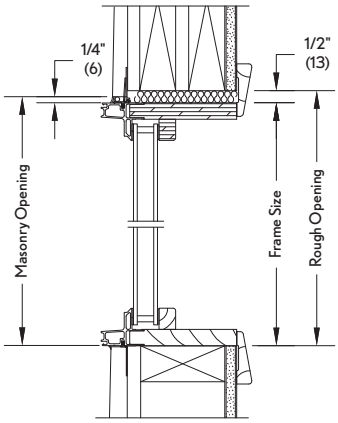

HEAD JAMB AND SILL - DIRECT GLAZE

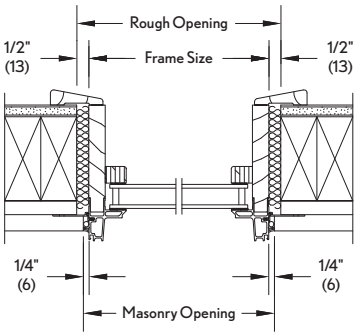

JAMB - DIRECT GLAZE

CLAD DIRECT GLAZE ROUND TOP

ENERGY DATA	U-Factor	SHGC	VT	CR	ENERGY STAR®
1" Insulating Glass Air	0.48	0.66	0.72	42	
1" Insulating Glass Air LoĒ-180™	0.34	0.58	0.69	52	
1" Insulating Glass Argon LoĒ-180™	0.30	0.58	0.69	55	N
1" Insulating Glass LoĒ²-272® Air	0.33	0.36	0.63	52	
1" Insulating Glass LoĒ²-272® Argon	0.29	0.36	0.63	55	N, NC
1" Insulating Glass LoĒ³ 366® Air	0.32	0.24	0.56	53	NC, SC, S
1" Insulating Glass LoĒ³ 366® Argon	0.28	0.24	0.56	56	N, NC, SC, S
1" Tri-Pane LoĒ-180™ Argon LoĒ-180™	0.22	0.50	0.62	62	N
1" Tri-Pane LoĒ-180™ Krypton-Argon LoĒ-180™	0.20	0.50	0.62	64	N
1" Tri-Pane LoĒ²-272® Argon LoĒ²-272®	0.22	0.31	0.51	62	N, NC
1" Tri-Pane LoĒ²-272® Krypton-Argon LoĒ²-272®	0.19	0.31	0.51	64	N, NC
1" Tri-Pane LoĒ³ 366® Argon LoĒ-180™	0.22	0.22	0.50	62	N, NC, SC, S
1" Tri-Pane LoĒ³ 366® Krypton-Argon LoĒ-180™	0.19	0.22	0.50	64	N, NC, SC, S

NOTES:

- Please contact your local Marvin® representative for masonry openings that include casings and subsills.

NOT TO SCALE