Clad Ultimate Double Hung Magnum Round Top

Unit Features 1
Minimum and Maximum Guidelines and Certified Ratings 2
Measurement Conversions and Egress Clear Openings 3
Section Details: Double Hung and Single Hung Operators 5
Available Shapes 6
Section Details: Casing Options 7

Unit Features

Clad Ultimate Round Top Double Hung Magnum: CUDHMRT

Clad Ultimate Round Top Single Hung Magnum: CUSHMRT

Clad Ultimate Round Top Double Hung Magnum Picture: CUDHMPRT

Clad Ultimate Round Top Double Hung Magnum Transom: CUDHMTRT

Hardware:

- Balance system: Spiral balance system.
- Lock: High pressure zinc die-cast cam lock and keeper cam lock and keeper. Standard color: Satin Taupe.
  - Optional colors: White, Brass, Satin Chrome, Antique Brass, Bronze, Oil Rubbed Bronze, and Satin Nickel.
- Sash lift is optional-same color choices as lock.
- Optional window opening device - field applied.

Optional Glass:

- 1" Tri-pane LoĒ-180™ outer piece and LoĒ-180™ inner piece with Argon
- 1" Tri-pane LoĒ-180™ outer piece and LoĒ-180™ inner piece with Krypton/Argon
- 1" Tri-pane LoĒ²272® outer piece and LoĒ²272® inner piece with Argon
- 1" Tri-pane LoĒ²272® outer piece and LoĒ²272® inner piece with Krypton/Argon
- 1" Tri-pane LoĒ 366® outer piece and LoĒ-180™ inner piece with Argon
- 1" Tri-pane LoĒ 366® outer piece and LoĒ-180™ inner piece with Krypton/Argon

Minimum and Maximum Guidelines and Certified Ratings

Minimum and Maximum Guidelines - Clad Ultimate Round Top Double Hung Magnum											
Unit Type		Rough Opening									
		Width		x	Height		Width		x	Height	
		in	mm	×	in	mm	in	mm	×	in	mm
CUDHM	Insulating Glass	26 3/8	(670)	×	48 7/8	(1241)	66 3/8	(1686)	×	128 7/8	(3273)
CUDHMT	Insulating Glass	14 3/8	(365)	×	14 3/16	(360)	106	(2692)	×	60	(1524)
CUDHMP	Insulating Glass	14 3/8	(365)	×	15 1/2	(394)	121	(3073)	×	128 7/8	(3273)

Standard Certified Sizes and Ratings						
Unit Type	Frame Height		Frame Width			
			in	mm	in	mm
	in	mm	53 3/8	(1356)	59 3/8	(1508)
CURTDHM	110 1/8	(2797)	LC-PG50-H		LC-PG35-H	
	120 3/8	(3058)	Not Rated		LC-PG35-H	

NOTE: Maximum sash weight: 130 lbs.

Measurement Conversions and Egress Clear Openings

Scale: 1 1/2” = 1’ 0"

Egress Conversions		
Glass Size Width = 1 7/8" (48) = Egress Width **Rough Opening Width - 4 1/2" (114) = Egress Width**		
Glass Size Height	**Rough Opening Height**	**Egress Height**
20" (508) to less than 28" (711)	48 7/8" (1241) to less than 64 7/8" (1648)	16 1/2" (419)
28" (711) to less than 38" (965)	64 7/8" (1648) to less than 84 7/8" (2156)	24 1/2" (622)
38" (965) to less than 49" (1245)	84 7/8" (2156) to less than 106 7/8" (2715)	34 1/2" (876)
49" (1245) to less than 60" (1524)	106 7/8" (2715) to less than 128 7/8" (3273)	45 1/2" (1156)

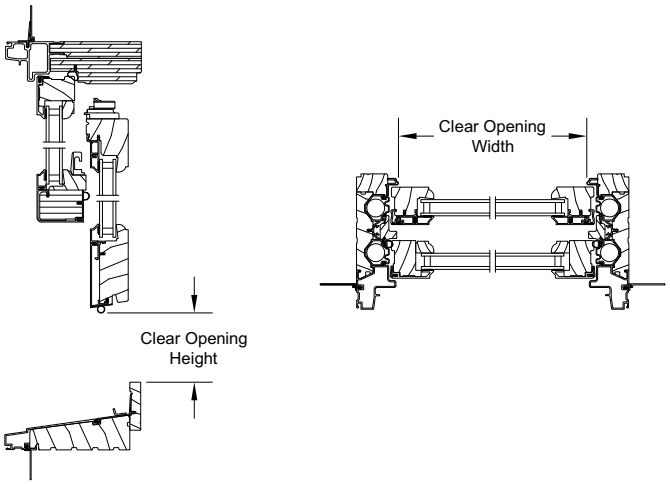

Measurement Conversions

Clad Ultimate Round Top Double Hung Magnum					
Unit Measurement		Width		Height	
From	To				
Frame Size		**in**	**mm**	**in**	**mm**
OM of Frame	Rough Opening	+ 1	(25)	+ 1/2	(13)
Masonry Opening	Frame Size	-1/2	(13)	-1/4	(06)
Masonry Opening w/BMC	Frame Size	-3 1/8	(79)	-2 3/16	(56)
Masonry Opening w/Flat Casing	Frame Size	-6 1/2	(165)	-3 7/8	(98)
Glass		**in**	**mm**	**in**	**mm**
Daylight Opening	Glass	+ 1 1/16	(27)	+ 1 1/16	(27)
Screen		**in**	**mm**	**in**	**mm**
Rough Opening	OM of Screen	-3 1/16	(78)	+ 2 11/32	(60)
Daylight Opening	OM of Screen	+ 4 3/8	(111)	× 2 + 8 21/32	(220)
Half Screen		**in**	**mm**	**in**	**mm**
OM of Frame	OM of Screen	-2 1/16	(52)	÷ 2 -3/16	(05)
Daylight Opening	OM of Screen	+ 4 3/8	(111)	DLO + 5 5/16	(135)

Clad Ultimate Round Top Double Hung Magnum Transom					
Unit Measurements		Width		Height	
From	To				
Frame Size		**in**	**mm**	**in**	**mm**
Frame Size	Rough Opening	+ 1	25	+ 1/2	13
Masonry Opening	Frame Size	-1/2	13	-1/4	6
Masonry Opening w/BMC	Frame Size	-3 1/8	79	-2 3/16	56
Masonry Opening w/Flat Casing	Frame Size	-6 1/2	165	-3 7/8	98
Glass		**in**	**mm**	**in**	**mm**
Daylight Opening	Glass	+ 1 1/16	27	+ 1 1/16	27

Clad Ultimate Round Top Double Hung Magnum Picture					
Unit Measurements		Width		Height	
From	To				
Frame Size		**in**	**mm**	**in**	**mm**
Frame Size	Rough Opening	+ 1	(25)	+ 1/2	(13)
Masonry Opening	Frame Size	-1/2	(13)	-1/4	(06)
Masonry Opening w/BMC	Frame Size	-3 1/8	(79)	-2 3/16	(56)
Masonry Opening w/Flat Casing	Frame Size	-6 1/2	(165)	-3 7/8	(98)
Glass		**in**	**mm**	**in**	**mm**
Daylight Opening	Glass	+ 1 3/16	(30)	+ 1 1/16	(27)

Section Details: Double Hung and Single Hung Operators

Scale: 3" = 1' 0"

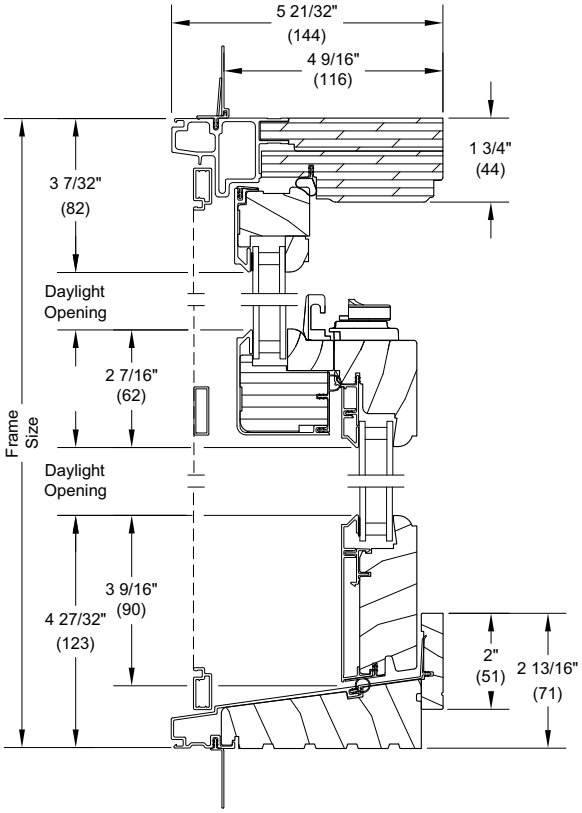

Head Jamb and Sill

Double Hung Operators

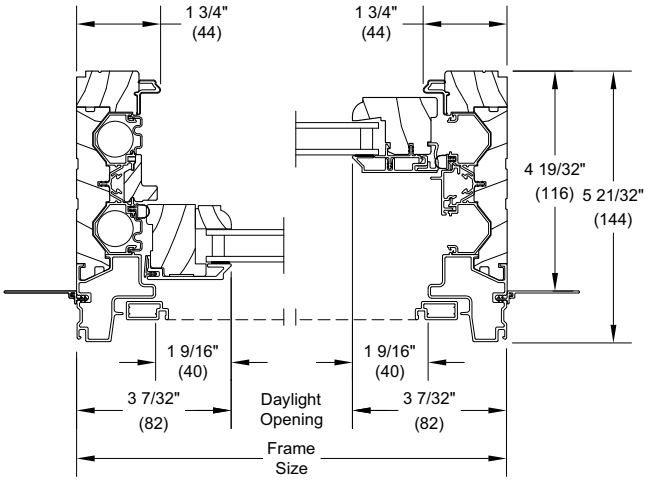

Jambs

Single Hung Operators

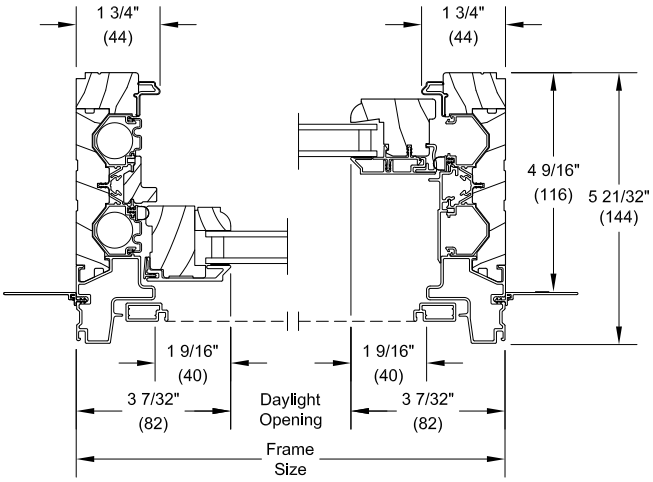

Jambs

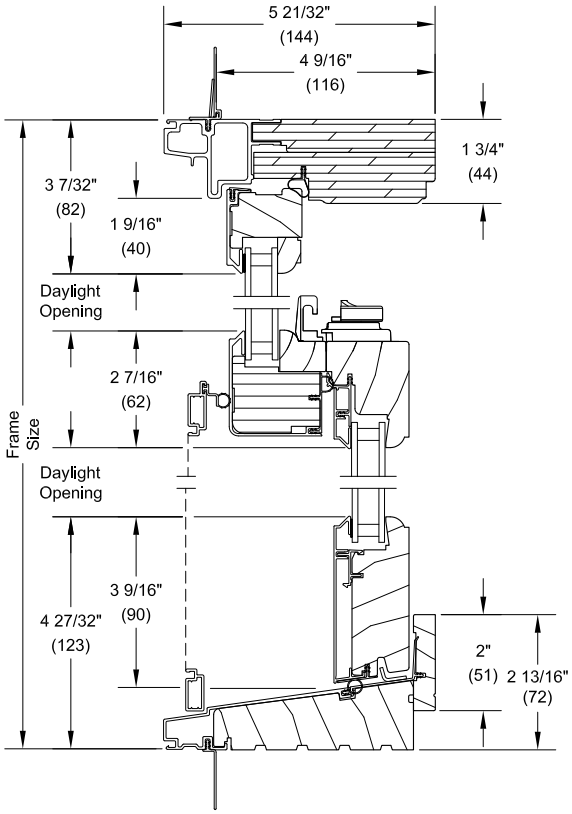

Head Jamb and Sill

Available Shapes

Scale: 3" = 1' 0"

Double Hung

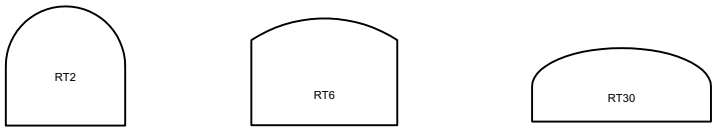

Transom and Picture

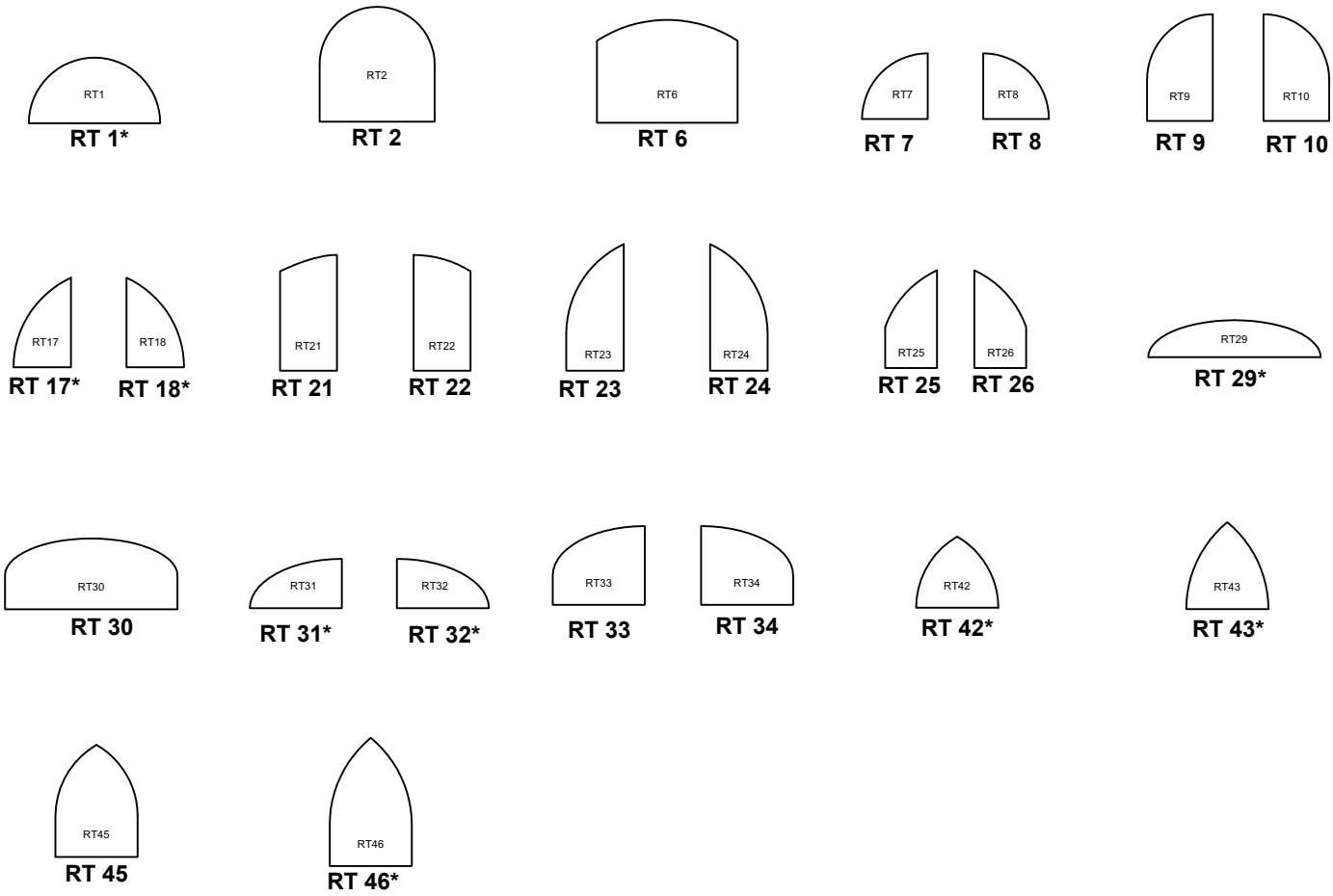

* Shapes are available in both transoms and pictures units, but may have size limitations. Contact your Marvin representative. Simulated Shapes. Simulated shapes require a minimum springline to bottom of sill height of 2 13/16" (17).

Section Details: Casing Options

Scale: 3" = 1' 0"

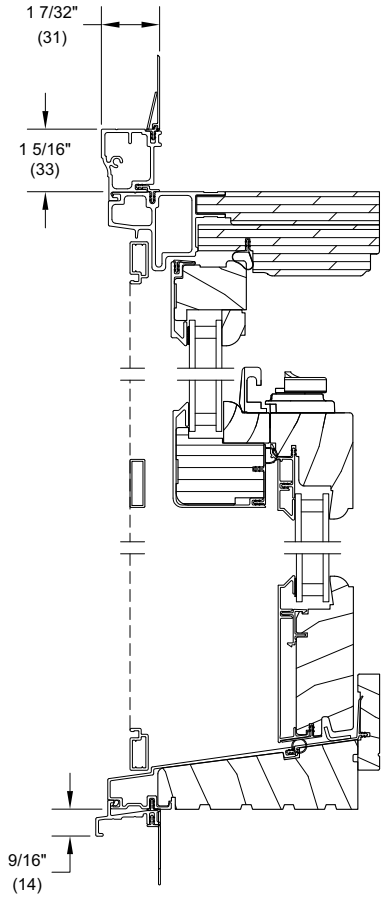

Head Jamb and Sill
with Clad Brick Mould Casing

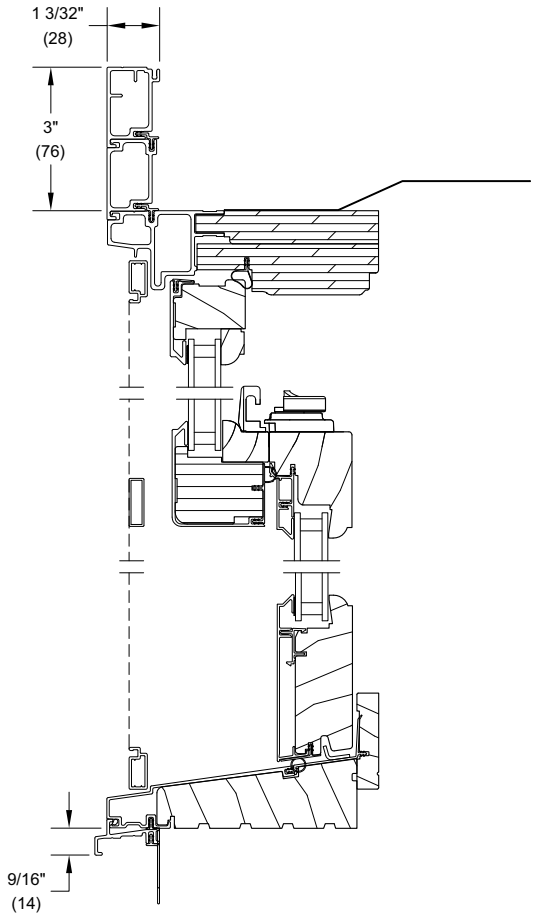

Head Jamb and Sill
with Clad Flat Casing