Clad Ultimate Double Hung Magnum

Unit Features 1
Egress and Vent Openings 2
Minimum and Maximum Guidelines, Certified Sizes and Ratings: Standard and Impact 3
Measurement Conversions 4
Section Details: Operating 5
Section Details: Transom/Picture 6
Section Details: Casing Options 7
Section Details: Combination 8
Section Details: Mullions 9

Unit Features

Clad Ultimate Double Hung Magnum: CUDHM

Clad Ultimate Single Hung Magnum: CUSHM

Clad Ultimate Double Hung Magnum Picture: CUDHMP

Clad Ultimate Double Hung Magnum Transom: CUDHMT

Operating Hardware:

- Sash lock and keeper: surface mounted, open style crescent cam lock. Two locks on glass of 36" (914) and wider. Color: Satin Taupe.
  - Optional colors: Bronze, White, Brass, Antique Brass, Satin Chrome, Satin Nickel, and Oil Rubbed Bronze.
- Balance System: Spiral balance system, designed to balance sash from 10 lbs. to 130 lbs.
- Pivot pins two per sash made of stainless steel are used. Clutches two per sash designed to receive the pivot pin and are designed to support sash weight up to 130 lbs.
- Tilt latch provided for say tilting of the top sash inward, located at check rail.
- Optional Sash lift: same colors as offered in locks.
- Optional window opening control device field applied.

Optional Glass:

- 1" Tri-pane LoĒ-180™ outer piece and LoĒ-180™ inner piece with Argon
- 1" Tri-pane LoĒ-180™ outer piece and LoĒ-180™ inner piece with Krypton/Argon
- 1" Tri-pane LoĒ²272® outer piece and LoĒ²272® inner piece with Argon
- 1" Tri-pane LoĒ²272® outer piece and LoĒ²272® inner piece with Krypton/Argon
- 1" Tri-pane LoĒ 366® outer piece and LoĒ-180™ inner piece with Argon
- 1" Tri-pane LoĒ 366® outer piece and LoĒ-180™ inner piece with Krypton/Argon

Egress and Vent Openings

Not to Scale: 1 1/2 = 1 0

Egress Conversions		
Glass Size Width = 1 7/8" (48) = Egress Width **Rough Opening Width - 4 1/2" (114) = Egress Width**		
Glass Size Height	**Rough Opening Height**	**Egress Height**
20" (508) to less than 28" (711)	48 7/8" (1241) to less than 64 7/8" (1648)	16 1/2" (419)
28" (711) to less than 38" (965)	64 7/8" (1648) to less than 84 7/8" (2156)	24 1/2" (622)
38" (965) to less than 49" (1245)	84 7/8" (2156) to less than 106 7/8" (2715)	34 1/2" (876)
49" (1245) to less than 60" (1524)	106 7/8" (2715) to less than 128 7/8" (3273)	45 1/2" (1156)

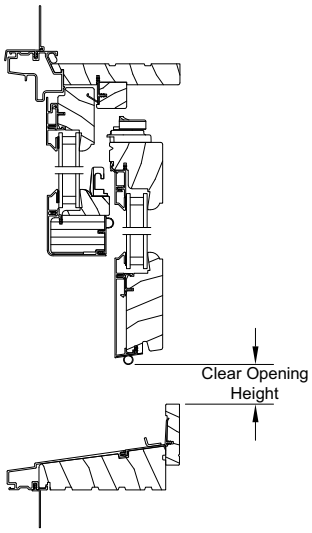

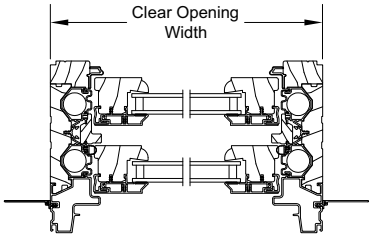

Minimum and Maximum Guidelines, Certified Sizes and Ratings: Standard and Impact

Minimum and Maximum Guidelines - Clad Ultimate Double Hung Magnum										
Unit Type	Frame Size									
	Width		×	Height		Width		×	Height	
	in	mm	×	in	mm	in	mm	×	in	mm
CUDHM	25 3/8	(645)	×	48 3/8	(1229)	59 3/8	(1508)	×	120 3/8	(3058)
CUDHMT	14 3/8	(365)	×	14 3/16	(360)	106	(2692)	×	60	(1524)
CUDHMP	14 3/8	(365)	×	15 1/2	(394)	121	(3073)	×	128 7/8	(3273)

Standard Certified Sizes and Ratings								
Unit Type	Frame Height		Frame Width					
			in	mm	in	mm	in	mm
	in	mm	53 3/8	(1356)	56	(1422)	59 3/8	(1508)
CUDHM	91	(2311)	CW-PG50-H		CW-PG40-H		LC-PG35-H	
	104 3/8	(2651)	CW-PG50-H		Not Rated		LC-PG35-H	
	120 3/8	(3058)	LC-PG35-H		LC-PG35-H		LC-PG35-H	

Minimum and Maximum Guidelines - Clad Ultimate Double Hung Magnum - IZ3										
Unit Type	Frame Size									
	Width		×	Height		Width		×	Height	
	in	mm	×	in	mm	in	mm	×	in	mm
CUDHM	21 3/8	(543)	×	33	(838)	53 3/8	(1356)	×	105	(2667)
CUDHM	15 3/8	(391)	×	65	(1651)	47 3/8	(1203)	×	121	(3073)

Certified Sizes and Ratings - IZ3						
Unit Type	Frame Height		Frame Width			
			in	mm	in	mm
	in	mm	53 3/8	(1356)	56	(1422)
CUDHM	91	(2311)	LC-PG50-H		LC-PG50-H	
CUDHM	104 3/8	(2651)	LC-PG50-H		Not Certified	

NOTE: Maximum sash weight is 130 lbs.

Measurement Conversions

Clad Ultimate Double Hung Magnum					
Unit Measurement		Width		Height	
From	To				
Frame Size		**in**	**mm**	**in**	**mm**
OM of Frame	Rough Opening	+ 1	(25)	+ 1/2	(13)
Masonry Opening	Frame Size	-1/2	(13)	-1/4	(06)
Masonry Opening w/BMC	Frame Size	-3 1/8	(79)	-2 3/16	(56)
Masonry Opening w/Flat Casing	Frame Size	-6 1/2	(165)	-3 7/8	(98)
Glass		**in**	**mm**	**in**	**mm**
Daylight Opening	Glass	+ 1 1/16	(27)	+ 1 1/16	(27)
Screen		**in**	**mm**	**in**	**mm**
Rough Opening	OM of Screen	-3 1/16	(78)	+ 2 11/32	(60)
Daylight Opening	OM of Screen	+ 4 3/8	(111)	× 2 + 8 21/32	(220)
Half Screen		**in**	**mm**	**in**	**mm**
OM of Frame	OM of Screen	-2 1/16	(52)	÷ 2 -3/16	-(05)
Daylight Opening	OM of Screen	+ 4 3/8	(111)	DLO + 5 5/16	(135)

Clad Ultimate Double Hung Magnum Transom					
Unit Measurements		Width		Height	
From	To				
Frame Size		**in**	**mm**	**in**	**mm**
Frame Size	Rough Opening	+ 1	(25)	+ 1/2	(13)
Masonry Opening	Frame Size	-1/2	(13)	-1/4	(06)
Masonry Opening w/BMC	Frame Size	-3 1/8	(79)	-2 3/16	(56)
Masonry Opening w/Flat Casing	Frame Size	-6 1/2	(165)	-3 7/8	(98)
Glass		**in**	**mm**	**in**	**mm**
Daylight Opening	Glass	+ 1 1/16	(27)	+ 1 1/16	(27)

Clad Ultimate Double Hung Magnum Picture					
Unit Measurements		Width		Height	
From	To				
Frame Size		**in**	**mm**	**in**	**mm**
Frame Size	Rough Opening	+ 1	(25)	+ 1/2	(13)
Masonry Opening	Frame Size	-1/2	(13)	-1/4	(06)
Masonry Opening w/BMC	Frame Size	-3 1/8	(79)	-2 3/16	(56)
Masonry Opening w/Flat Casing	Frame Size	-6 1/2	(165)	-3 7/8	(98)
Glass		**in**	**mm**	**in**	**mm**
Daylight Opening	Glass	+ 1 3/16	(30)	+ 1 1/16	(27)

Section Details: Operating

Scale: 3" = 1' 0"

Double Hung

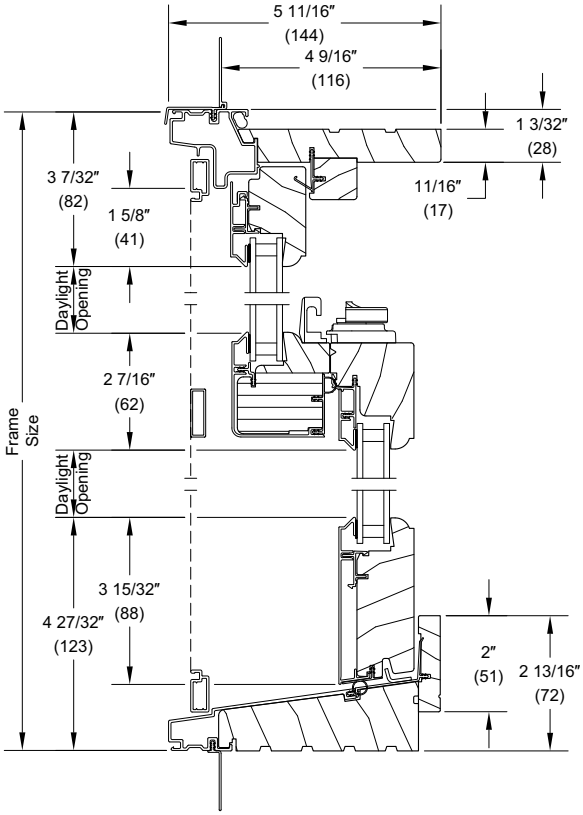

Head Jamb and Sill

Single Hung

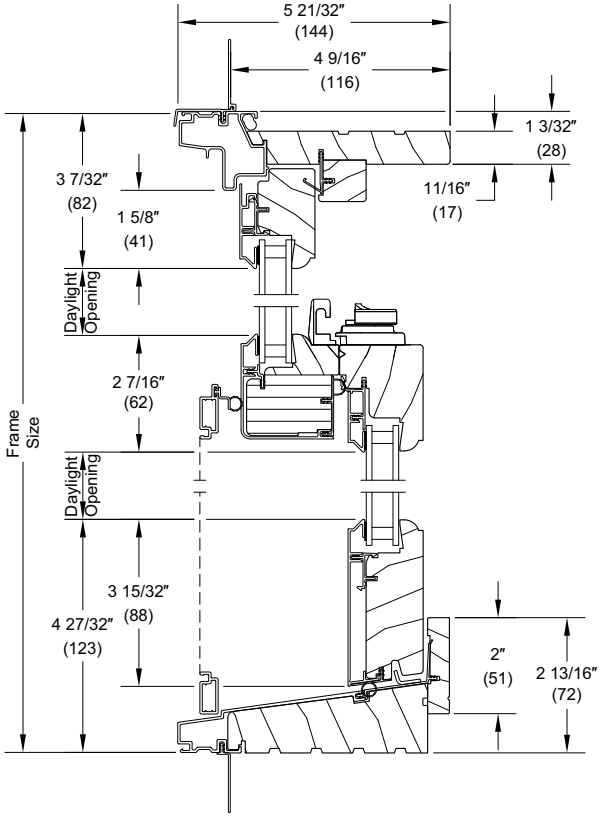

Head Jamb and Sill

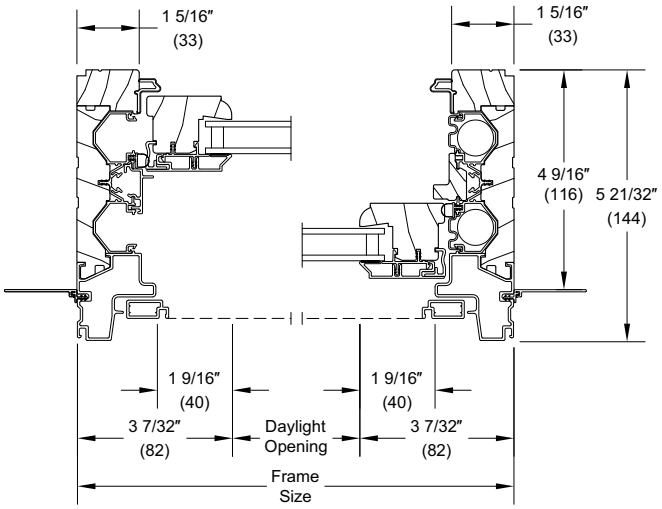

Jamb

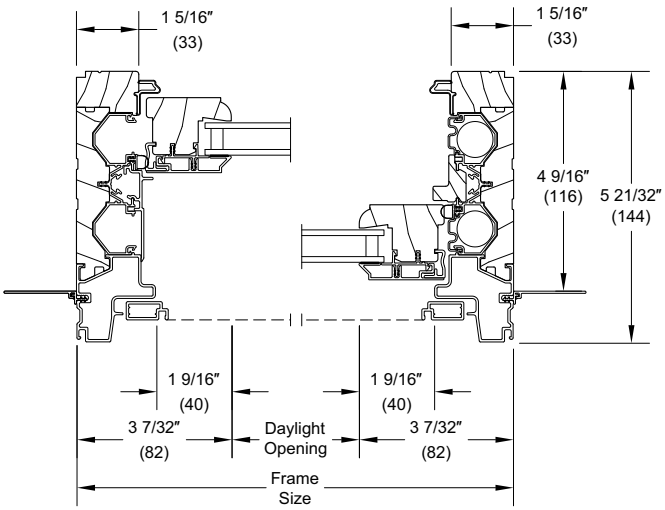

Jambs

Section Details: Transom/Picture

Scale: 3" = 1' 0"

Transom

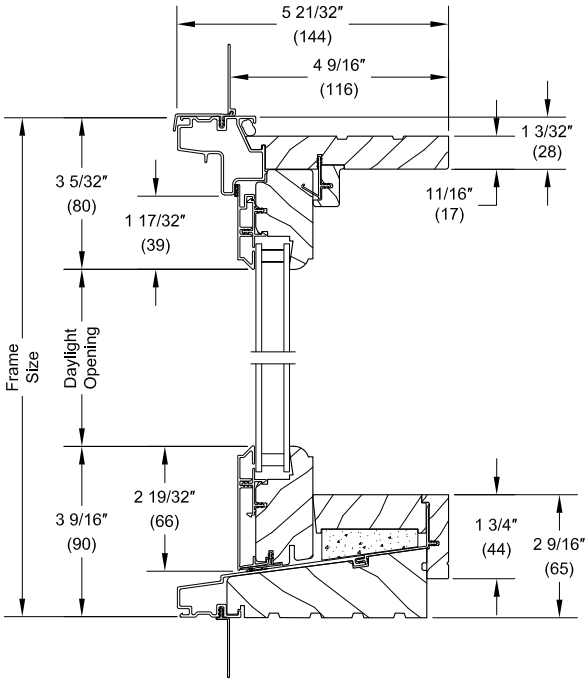

Head Jamb and Sill

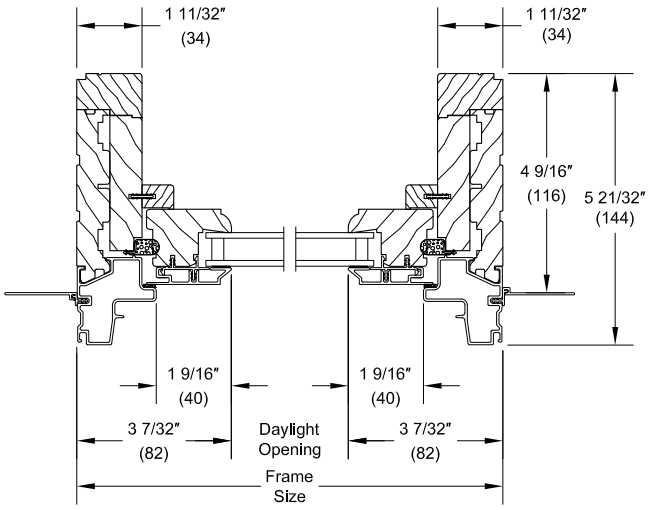

Jambs

2" Picture

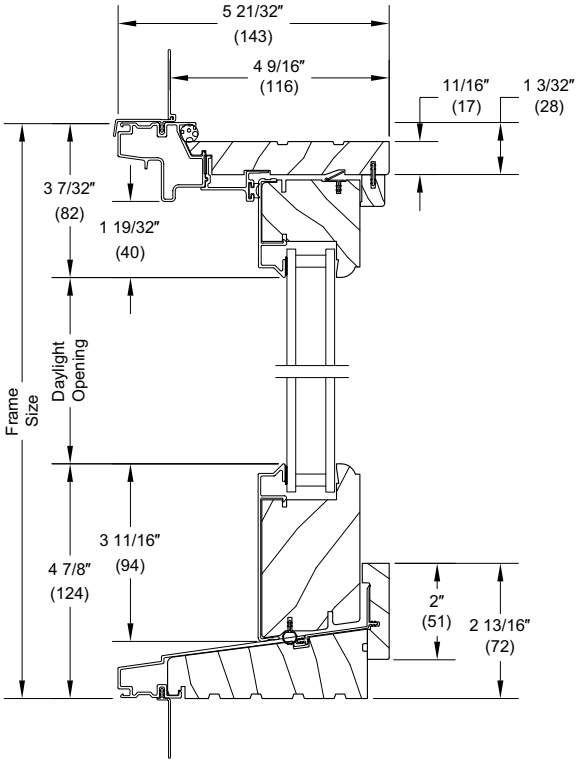

Head Jamb and Sill

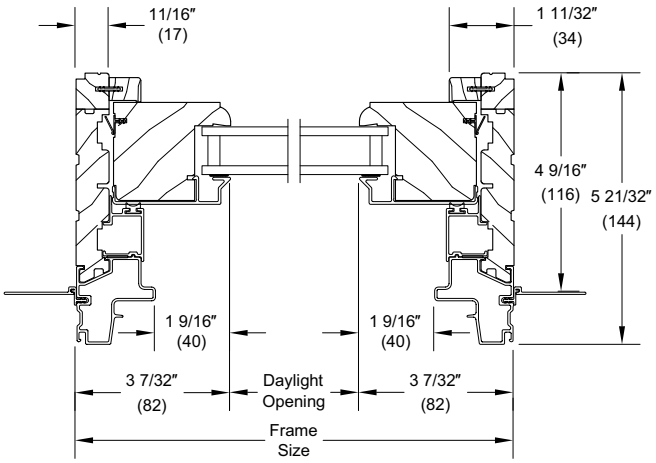

Jambs

Section Details: Casing Options

Scale: 3" = 1' 0"

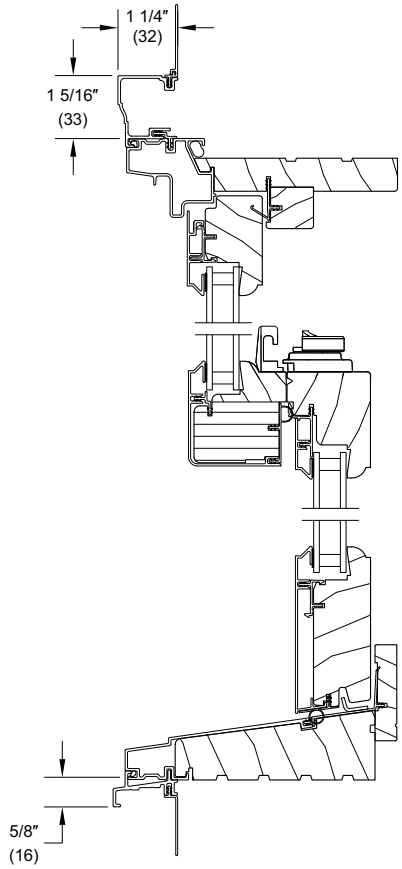

Head Jamb and Sill
with Clad Brick Mould casing

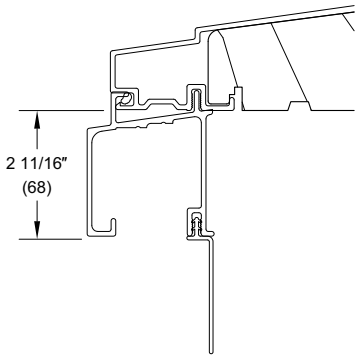

Sill with 2"
extruded subsill

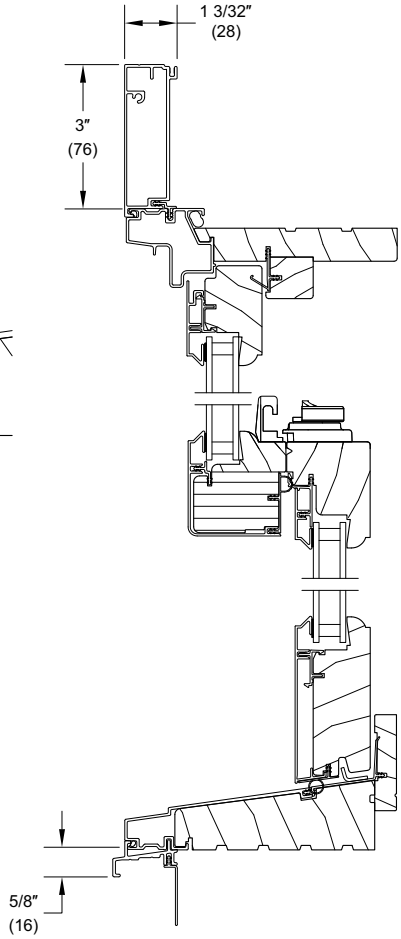

Head Jamb and Sill
with Clad Flat Casing

Section Details: Combination

Scale: 3" = 1’ 0"

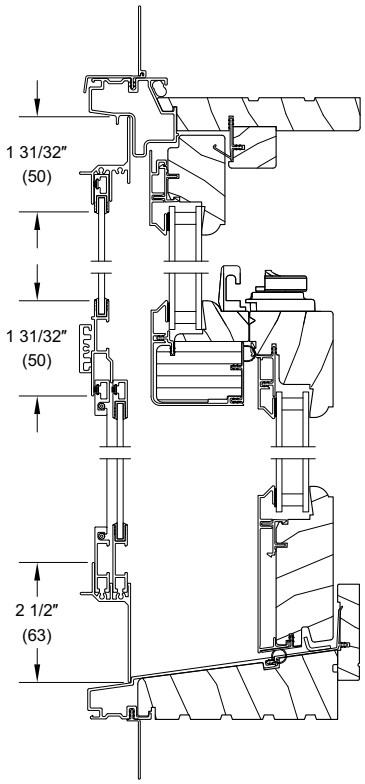

Head Jamb and Sill

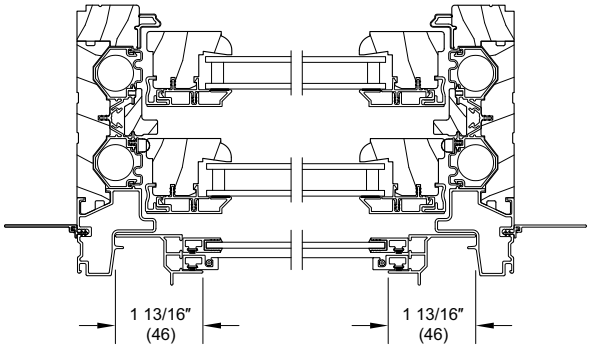

Jambs

Section Details: Mullions

Scale: 3" = 1' 0"

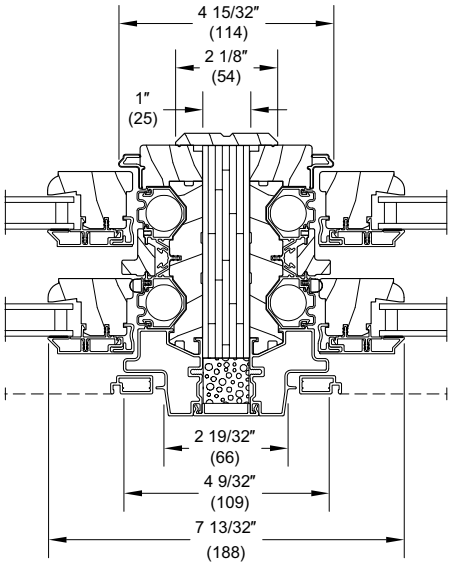

1" Solid Space
Vertical Mullion
Operator/Operator

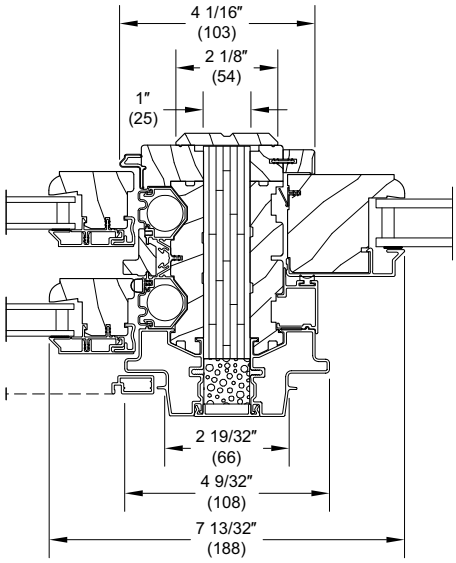

1" Solid Space
Vertical Mullion
Operator/Picture

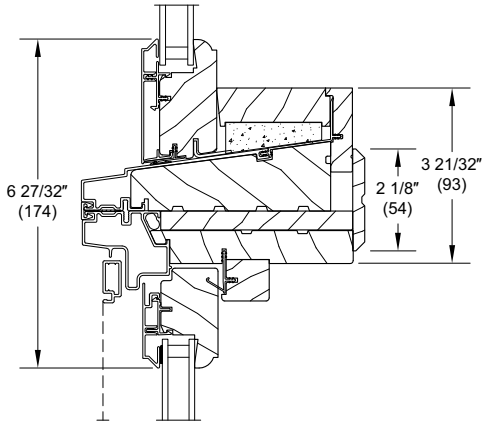

Horizontal Mullion
Transom/Operator

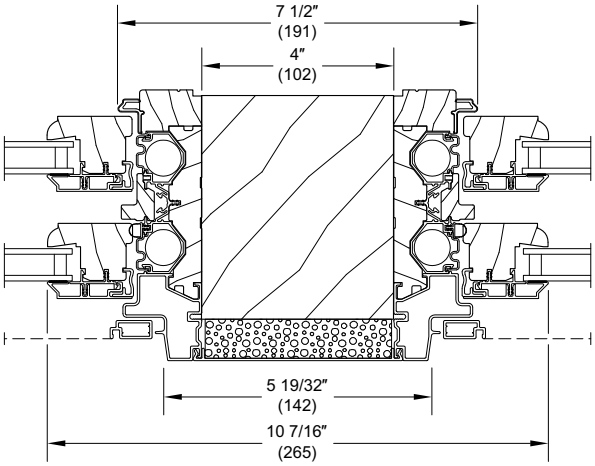

Vertical Mullion
Operator with 4" (102) Solid Space Mull

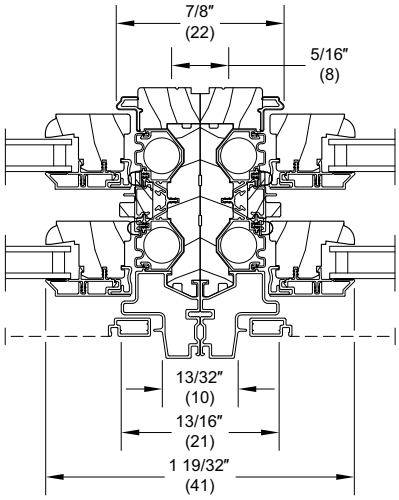

Vertical Mullion
Operator/Operator