Clad Ultimate Double Hung

Unit Features 1
Egress and Vent Openings: Standard Sill Liner 2
Egress and Vent Openings: High Performance Sill Liner 4
Daylight Measurements: Double Hung 6
Daylight Measurements: Transom 7
Daylight Measurements: Picture 8
Minimum and Maximum Guidelines, Certified Sizes and Ratings: Double Hung Units 9
Impact Zone 3 - Minimum and Maximum Guidelines, Certified Sizes and Ratings 10
Measurement Conversions 12
Standard Unit Measurements: Double Hung 15
Standard Unit Measurements: Transom/Picture 16
Section Details: Operating 17
Section Details: 1 5/8" Transom and 2" Picture 18
Section Details: Operating Impact Zone 3 19
Section Details: Transom/Picture Impact Zone 3 20
Section Details: Casings 21
Section Details: 6 9/16" Combination 22
Section Details: Mullions 23

Unit Features

Clad Ultimate Double Hung: CUDH

Clad Ultimate Double Hung Transom: CUDHT

Clad Ultimate Double Hung Picture: CUDHP

Operating Hardware:

- Sash lock and keeper: Open style crescent cam lock with sash release lever, surface mounted. Color: Satin Taupe.
  - Optional Colors: White, Brass, Satin chrome, Antique Brass, Bronze, Oil Rubbed Bronze, Satin Nickel.
- Balance System: Block and tackle balance system.
- Optional Sash lift: same colors as offered in locks.
- Optional window opening control device field applied.

Optional Glass:

- 1" Tri-pane LoĒ-180™ outer piece and LoĒ-180™ inner piece with Argon
- 1" Tri-pane LoĒ-180™ outer piece and LoĒ-180™ inner piece with Krypton/Argon
- 1" Tri-pane LoĒ²272® outer piece and LoĒ²272® inner piece with Argon
- 1" Tri-pane LoĒ²272® outer piece and LoĒ²272® inner piece with Krypton/Argon
- 1" Tri-pane LoĒ 366® outer piece and LoĒ-180™ inner piece with Argon
- 1" Tri-pane LoĒ 366® outer piece and LoĒ-180™ inner piece with Krypton/Argon

Egress and Vent Openings: Standard Sill Liner

CN		Opening Width		Opening Height Std. Sill Liner		Egress Opening	
		ft - in	mm	ft - in	mm	ft^2	m^2
1612		1-6 1/8	(459)	0-10 1/8	(257)	1.27	(0.12)
1614		1-6 1/8	(459)	1-0 1/8	(308)	1.52	(0.14)
1616		1-6 1/8	(459)	1-2 1/8	(359)	1.77	(0.16)
1618		1-6 1/8	(459)	1-4 1/8	(410)	2.03	(0.19)
1620		1-6 1/8	(459)	1-6 1/8	(460)	2.28	(0.21)
1622		1-6 1/8	(459)	1-8 1/8	(511)	2.53	(0.23)
1624		1-6 1/8	(459)	1-10 1/8	(562)	2.78	(0.26)
1626		1-6 1/8	(459)	2-0 1/8	(613)	3.03	(0.28)
1628		1-6 1/8	(459)	2-2 1/8	(664)	3.28	(0.30)
1630		1-6 1/8	(459)	2-4 1/8	(714)	3.53	(0.33)
1632		1-6 1/8	(459)	2-6 1/8	(765)	3.78	(0.35)
1634		1-6 1/8	(459)	2-8 1/8	(816)	4.04	(0.37)
1636		1-6 1/8	(459)	2-10 1/8	(867)	4.29	(0.40)
1640		1-6 1/8	(459)	3-2 1/8	(968)	4.79	(0.44)
1642		1-6 1/8	(459)	3-4 1/8	(1019)	5.04	(0.47)
2012		1-10 1/8	(561)	0-10 1/8	(257)	1.55	(0.14)
2014		1-10 1/8	(561)	1-0 1/8	(308)	1.86	(0.17)
2016		1-10 1/8	(561)	1-2 1/8	(359)	2.17	(0.20)
2018		1-10 1/8	(561)	1-4 1/8	(410)	2.47	(0.23)
2020		1-10 1/8	(561)	1-6 1/8	(460)	2.78	(0.26)
2022		1-10 1/8	(561)	1-8 1/8	(511)	3.09	(0.29)
2024		1-10 1/8	(561)	1-10 1/8	(562)	3.39	(0.32)
2026		1-10 1/8	(561)	2-0 1/8	(613)	3.70	(0.34)
2028		1-10 1/8	(561)	2-2 1/8	(664)	4.01	(0.37)
2030		1-10 1/8	(561)	2-4 1/8	(714)	4.31	(0.40)
2032		1-10 1/8	(561)	2-6 1/8	(765)	4.62	(0.43)
2034		1-10 1/8	(561)	2-8 1/8	(816)	4.93	(0.46)
2036		1-10 1/8	(561)	2-10 1/8	(867)	5.23	(0.49)
2040	E	1-10 1/8	(561)	3-2 1/8	(968)	5.85	(0.54)
2042	E	1-10 1/8	(561)	3-4 1/8	(1019)	6.15	(0.57)
2412		2-2 1/8	(663)	0-10 1/8	(257)	1.83	(0.17)
2414		2-2 1/8	(663)	1-0 1/8	(308)	2.20	(0.20)
2416		2-2 1/8	(663)	1-2 1/8	(359)	2.56	(0.24)
2418		2-2 1/8	(663)	1-4 1/8	(410)	2.92	(0.27)
2420		2-2 1/8	(663)	1-6 1/8	(460)	3.28	(0.31)
2422		2-2 1/8	(663)	1-8 1/8	(511)	3.65	(0.34)
2424		2-2 1/8	(663)	1-10 1/8	(562)	4.01	(0.37)
2426		2-2 1/8	(663)	2-0 1/8	(613)	4.37	(0.41)
2428		2-2 1/8	(663)	2-2 1/8	(664)	4.73	(0.44)
2430		2-2 1/8	(663)	2-4 1/8	(714)	5.10	(0.47)
2432		2-2 1/8	(663)	2-6 1/8	(765)	5.46	(0.51)
2434	E	2-2 1/8	(663)	2-8 1/8	(816)	5.82	(0.54)
2436	E	2-2 1/8	(663)	2-10 1/8	(867)	6.18	(0.57)
2440	E	2-2 1/8	(663)	3-2 1/8	(968)	6.91	(0.64)
2442	E	2-2 1/8	(663)	3-4 1/8	(1019)	7.27	(0.68)

CN		Opening Width		Opening Height Std. Sill Liner		Egress Opening	
		ft - in	mm	ft - in	mm	ft^2	m^2
2612		2-4 1/8	(713)	0-10 1/8	(257)	1.98	(0.18)
2614		2-4 1/8	(713)	1-0 1/8	(308)	2.37	(0.22)
2616		2-4 1/8	(713)	1-2 1/8	(359)	2.76	(0.26)
2618		2-4 1/8	(713)	1-4 1/8	(410)	3.15	(0.29)
2620		2-4 1/8	(713)	1-6 1/8	(460)	3.54	(0.33)
2622		2-4 1/8	(713)	1-8 1/8	(511)	3.93	(0.36)
2624		2-4 1/8	(713)	1-10 1/8	(562)	4.32	(0.40)
2626		2-4 1/8	(713)	2-0 1/8	(613)	4.71	(0.44)
2628		2-4 1/8	(713)	2-2 1/8	(664)	5.10	(0.47)
2630		2-4 1/8	(713)	2-4 1/8	(714)	5.49	(0.51)
2632	E	2-4 1/8	(713)	2-6 1/8	(765)	5.88	(0.55)
2634	E	2-4 1/8	(713)	2-8 1/8	(816)	6.27	(0.58)
2636	E	2-4 1/8	(713)	2-10 1/8	(867)	6.66	(0.62)
2640	E	2-4 1/8	(713)	3-2 1/8	(968)	7.44	(0.69)
2642	E	2-4 1/8	(713)	3-4 1/8	(1019)	7.83	(0.73)
2812		2-6 1/8	(764)	0-10 1/8	(257)	2.12	(0.20)
2814		2-6 1/8	(764)	1-0 1/8	(308)	2.53	(0.24)
2816		2-6 1/8	(764)	1-2 1/8	(359)	2.95	(0.27)
2818		2-6 1/8	(764)	1-4 1/8	(410)	3.37	(0.31)
2820		2-6 1/8	(764)	1-6 1/8	(460)	3.79	(0.35)
2822		2-6 1/8	(764)	1-8 1/8	(511)	4.21	(0.39)
2824		2-6 1/8	(764)	1-10 1/8	(562)	4.62	(0.43)
2826		2-6 1/8	(764)	2-0 1/8	(613)	5.04	(0.47)
2828		2-6 1/8	(764)	2-2 1/8	(664)	5.46	(0.51)
2830	E	2-6 1/8	(764)	2-4 1/8	(714)	5.88	(0.55)
2832	E	2-6 1/8	(764)	2-6 1/8	(765)	6.29	(0.58)
2834	E	2-6 1/8	(764)	2-8 1/8	(816)	6.71	(0.62)
2836	E	2-6 1/8	(764)	2-10 1/8	(867)	7.13	(0.66)
2840	E	2-6 1/8	(764)	3-2 1/8	(968)	7.97	(0.74)
2842	E	2-6 1/8	(764)	3-4 1/8	(1019)	8.38	(0.78)
3012		2-8 1/8	(815)	0-10 1/8	(257)	2.26	(0.21)
3014		2-8 1/8	(815)	1-0 1/8	(308)	2.70	(0.25)
3016		2-8 1/8	(815)	1-2 1/8	(359)	3.15	(0.29)
3018		2-8 1/8	(815)	1-4 1/8	(410)	3.59	(0.33)
3020		2-8 1/8	(815)	1-6 1/8	(460)	4.04	(0.38)
3022		2-8 1/8	(815)	1-8 1/8	(511)	4.48	(0.42)
3024		2-8 1/8	(815)	1-10 1/8	(562)	4.93	(0.46)
3026		2-8 1/8	(815)	2-0 1/8	(613)	5.38	(0.50)
3028	E	2-8 1/8	(815)	2-2 1/8	(664)	5.82	(0.54)
3030	E	2-8 1/8	(815)	2-4 1/8	(714)	6.27	(0.58)
3032	E	2-8 1/8	(815)	2-6 1/8	(765)	6.71	(0.62)
3034	E	2-8 1/8	(815)	2-8 1/8	(816)	7.16	(0.67)
3036	E	2-8 1/8	(815)	2-10 1/8	(867)	7.60	(0.71)
3040	E	2-8 1/8	(815)	3-2 1/8	(968)	8.50	(0.79)
3042	E	2-8 1/8	(815)	3-4 1/8	(1019)	8.94	(0.83)

NOTE: Refer to Product Performance Chapter for International Building Code. Net Clear Opening drawings are pictured with the conversion tables.

Egress and Vent Openings: Standard Sill Liner

CN		Opening Width		Opening Height Std. Sill Liner		Egress Opening	
		ft - in	mm	ft - in	mm	ft^2	m^2
3212		2-10 1/8	(866)	0-10 1/8	(257)	2.40	(0.22)
3214		2-10 1/8	(866)	1-0 1/8	(308)	2.87	(0.27)
3216		2-10 1/8	(866)	1-2 1/8	(359)	3.34	(0.31)
3218		2-10 1/8	(866)	1-4 1/8	(410)	3.82	(0.35)
3220		2-10 1/8	(866)	1-6 1/8	(460)	4.29	(0.40)
3222		2-10 1/8	(866)	1-8 1/8	(511)	4.76	(0.44)
3224		2-10 1/8	(866)	1-10 1/8	(562)	5.24	(0.49)
3226	E	2-10 1/8	(866)	2-0 1/8	(613)	5.71	(0.53)
3228	E	2-10 1/8	(866)	2-2 1/8	(664)	6.18	(0.57)
3230	E	2-10 1/8	(866)	2-4 1/8	(714)	6.66	(0.62)
3232	E	2-10 1/8	(866)	2-6 1/8	(765)	7.13	(0.66)
3234	E	2-10 1/8	(866)	2-8 1/8	(816)	7.60	(0.71)
3236	E	2-10 1/8	(866)	2-10 1/8	(867)	8.08	(0.75)
3240	E	2-10 1/8	(866)	3-2 1/8	(968)	9.03	(0.84)
3242	E	2-10 1/8	(866)	3-4 1/8	(1019)	9.50	(0.88)
3612		3-2 1/8	(967)	0-10 1/8	(257)	2.68	(0.25)
3614		3-2 1/8	(967)	1-0 1/8	(308)	3.21	(0.30)
3616		3-2 1/8	(967)	1-2 1/8	(359)	3.74	(0.35)
3618		3-2 1/8	(967)	1-4 1/8	(410)	4.27	(0.40)
3620		3-2 1/8	(967)	1-6 1/8	(460)	4.79	(0.45)
3622		3-2 1/8	(967)	1-8 1/8	(511)	5.32	(0.49)
3624		3-2 1/8	(967)	1-10 1/8	(562)	5.85	(0.54)
3626	E	3-2 1/8	(967)	2-0 1/8	(613)	6.38	(0.59)
3628	E	3-2 1/8	(967)	2-2 1/8	(664)	6.91	(0.64)
3630	E	3-2 1/8	(967)	2-4 1/8	(714)	7.44	(0.69)
3632	E	3-2 1/8	(967)	2-6 1/8	(765)	7.97	(0.74)
3634	E	3-2 1/8	(967)	2-8 1/8	(816)	8.50	(0.79)
3636	E	3-2 1/8	(967)	2-10 1/8	(867)	9.03	(0.84)
3640	E	3-2 1/8	(967)	3-2 1/8	(968)	10.08	(0.94)
3642	E	3-2 1/8	(967)	3-4 1/8	(1019)	10.61	(0.99)
4012		3-6 1/8	(1069)	0-10 1/8	(257)	2.96	(0.27)
4014		3-6 1/8	(1069)	1-0 1/8	(308)	3.54	(0.33)
4016		3-6 1/8	(1069)	1-2 1/8	(359)	4.13	(0.38)
4018		3-6 1/8	(1069)	1-4 1/8	(410)	4.71	(0.44)
4020		3-6 1/8	(1069)	1-6 1/8	(460)	5.30	(0.49)
4022		3-6 1/8	(1069)	1-8 1/8	(511)	5.88	(0.55)
4024		3-6 1/8	(1069)	1-10 1/8	(562)	6.47	(0.60)
4026	E	3-6 1/8	(1069)	2-0 1/8	(613)	7.05	(0.66)
4028	E	3-6 1/8	(1069)	2-2 1/8	(664)	7.64	(0.71)
4030	E	3-6 1/8	(1069)	2-4 1/8	(714)	8.22	(0.76)
4032	E	3-6 1/8	(1069)	2-6 1/8	(765)	8.81	(0.82)
4034	E	3-6 1/8	(1069)	2-8 1/8	(816)	9.39	(0.87)
4036	E	3-6 1/8	(1069)	2-10 1/8	(867)	9.97	(0.93)

NOTE: Refer to Product Performance Chapter for International Building Code. Net Clear Opening drawings are pictured with the conversion tables.

Egress and Vent Openings: High Performance Sill Liner

CN		Opening Width		Opening Height HP Sill Liner		Egress Opening	
		ft - in	mm	ft - in	mm	ft^2	m^2
1612		1-6 1/8	(459)	0-9 1/4	(235)	1.16	(0.11)
1614		1-6 1/8	(459)	0-11 1/4	(286)	1.41	(0.13)
1616		1-6 1/8	(459)	1-1 1/4	(337)	1.66	(0.15)
1618		1-6 1/8	(459)	1-3 1/4	(387)	1.92	(0.18)
1620		1-6 1/8	(459)	1-5 1/4	(438)	2.17	(0.20)
1622		1-6 1/8	(459)	1-7 1/4	(489)	2.42	(0.22)
1624		1-6 1/8	(459)	1-9 1/4	(540)	2.67	(0.25)
1626		1-6 1/8	(459)	1-11 1/4	(591)	2.92	(0.27)
1628		1-6 1/8	(459)	2-1 1/4	(641)	3.17	(0.29)
1630		1-6 1/8	(459)	2-3 1/4	(692)	3.42	(0.32)
1632		1-6 1/8	(459)	2-5 1/4	(743)	3.67	(0.34)
1634		1-6 1/8	(459)	2-7 1/4	(794)	3.93	(0.36)
1636		1-6 1/8	(459)	2-9 1/4	(845)	4.18	(0.39)
1640		1-6 1/8	(459)	3-1 1/4	(946)	4.68	(0.43)
1642		1-6 1/8	(459)	3-3 1/4	(997)	4.93	(0.46)
2012		1-10 1/8	(561)	0-9 1/4	(235)	1.42	(0.13)
2014		1-10 1/8	(561)	0-11 1/4	(286)	1.73	(0.16)
2016		1-10 1/8	(561)	1-1 1/4	(337)	2.03	(0.19)
2018		1-10 1/8	(561)	1-3 1/4	(387)	2.34	(0.22)
2020		1-10 1/8	(561)	1-5 1/4	(438)	2.65	(0.25)
2022		1-10 1/8	(561)	1-7 1/4	(489)	2.95	(0.27)
2024		1-10 1/8	(561)	1-9 1/4	(540)	3.26	(0.30)
2026		1-10 1/8	(561)	1-11 1/4	(591)	3.57	(0.33)
2028		1-10 1/8	(561)	2-1 1/4	(641)	3.87	(0.36)
2030		1-10 1/8	(561)	2-3 1/4	(692)	4.18	(0.39)
2032		1-10 1/8	(561)	2-5 1/4	(743)	4.49	(0.42)
2034		1-10 1/8	(561)	2-7 1/4	(794)	4.79	(0.45)
2036		1-10 1/8	(561)	2-9 1/4	(845)	5.10	(0.47)
2040	E	1-10 1/8	(561)	3-1 1/4	(946)	5.71	(0.53)
2042	E	1-10 1/8	(561)	3-3 1/4	(997)	6.02	(0.56)
2412		2-2 1/8	(663)	0-9 1/4	(235)	1.68	(0.16)
2414		2-2 1/8	(663)	0-11 1/4	(286)	2.04	(0.19)
2416		2-2 1/8	(663)	1-1 1/4	(337)	2.40	(0.22)
2418		2-2 1/8	(663)	1-3 1/4	(387)	2.76	(0.26)
2420		2-2 1/8	(663)	1-5 1/4	(438)	3.13	(0.29)
2422		2-2 1/8	(663)	1-7 1/4	(489)	3.49	(0.32)
2424		2-2 1/8	(663)	1-9 1/4	(540)	3.85	(0.36)
2426		2-2 1/8	(663)	1-11 1/4	(591)	4.21	(0.39)
2428		2-2 1/8	(663)	2-1 1/4	(641)	4.57	(0.42)
2430		2-2 1/8	(663)	2-3 1/4	(692)	4.94	(0.46)
2432		2-2 1/8	(663)	2-5 1/4	(743)	5.30	(0.49)
2434		2-2 1/8	(663)	2-7 1/4	(794)	5.66	(0.53)
2436	E	2-2 1/8	(663)	2-9 1/4	(845)	6.02	(0.56)
2440	E	2-2 1/8	(663)	3-1 1/4	(946)	6.75	(0.63)
2442	E	2-2 1/8	(663)	3-3 1/4	(997)	7.11	(0.66)

CN		Opening Width		Opening Height HP Sill Liner		Egress Opening	
		ft - in	mm	ft - in	mm	ft^2	m^2
2612		2-4 1/8	(713)	0-9 1/4	(235)	1.80	(0.17)
2614		2-4 1/8	(713)	0-11 1/4	(286)	2.19	(0.20)
2616		2-4 1/8	(713)	1-1 1/4	(337)	2.58	(0.24)
2618		2-4 1/8	(713)	1-3 1/4	(387)	2.97	(0.28)
2620		2-4 1/8	(713)	1-5 1/4	(438)	3.36	(0.31)
2622		2-4 1/8	(713)	1-7 1/4	(489)	3.75	(0.35)
2624		2-4 1/8	(713)	1-9 1/4	(540)	4.15	(0.39)
2626		2-4 1/8	(713)	1-11 1/4	(591)	4.54	(0.42)
2628		2-4 1/8	(713)	2-1 1/4	(641)	4.93	(0.46)
2630		2-4 1/8	(713)	2-3 1/4	(692)	5.32	(0.49)
2632	E	2-4 1/8	(713)	2-5 1/4	(743)	5.71	(0.53)
2634	E	2-4 1/8	(713)	2-7 1/4	(794)	6.10	(0.57)
2636	E	2-4 1/8	(713)	2-9 1/4	(845)	6.49	(0.60)
2640	E	2-4 1/8	(713)	3-1 1/4	(946)	7.27	(0.68)
2642	E	2-4 1/8	(713)	3-3 1/4	(997)	7.66	(0.71)
2812		2-6 1/8	(764)	0-9 1/4	(235)	1.93	(0.18)
2814		2-6 1/8	(764)	0-11 1/4	(286)	2.35	(0.22)
2816		2-6 1/8	(764)	1-1 1/4	(337)	2.77	(0.26)
2818		2-6 1/8	(764)	1-3 1/4	(387)	3.19	(0.30)
2820		2-6 1/8	(764)	1-5 1/4	(438)	3.60	(0.33)
2822		2-6 1/8	(764)	1-7 1/4	(489)	4.02	(0.37)
2824		2-6 1/8	(764)	1-9 1/4	(540)	4.44	(0.41)
2826		2-6 1/8	(764)	1-11 1/4	(591)	4.86	(0.45)
2828		2-6 1/8	(764)	2-1 1/4	(641)	5.28	(0.49)
2830		2-6 1/8	(764)	2-3 1/4	(692)	5.69	(0.53)
2832	E	2-6 1/8	(764)	2-5 1/4	(743)	6.11	(0.57)
2834	E	2-6 1/8	(764)	2-7 1/4	(794)	6.53	(0.61)
2836	E	2-6 1/8	(764)	2-9 1/4	(845)	6.95	(0.65)
2840	E	2-6 1/8	(764)	3-1 1/4	(946)	7.78	(0.72)
2842	E	2-6 1/8	(764)	3-3 1/4	(997)	8.20	(0.76)
3012		2-8 1/8	(815)	0-9 1/4	(235)	2.06	(0.19)
3014		2-8 1/8	(815)	0-11 1/4	(286)	2.51	(0.23)
3016		2-8 1/8	(815)	1-1 1/4	(337)	2.95	(0.27)
3018		2-8 1/8	(815)	1-3 1/4	(387)	3.40	(0.32)
3020		2-8 1/8	(815)	1-5 1/4	(438)	3.84	(0.36)
3022		2-8 1/8	(815)	1-7 1/4	(489)	4.29	(0.40)
3024		2-8 1/8	(815)	1-9 1/4	(540)	4.74	(0.44)
3026		2-8 1/8	(815)	1-11 1/4	(591)	5.18	(0.48)
3028		2-8 1/8	(815)	2-1 1/4	(641)	5.63	(0.52)
3030	E	2-8 1/8	(815)	2-3 1/4	(692)	6.07	(0.56)
3032	E	2-8 1/8	(815)	2-5 1/4	(743)	6.52	(0.61)
3034	E	2-8 1/8	(815)	2-7 1/4	(794)	6.96	(0.65)
3036	E	2-8 1/8	(815)	2-9 1/4	(845)	7.41	(0.69)
3040	E	2-8 1/8	(815)	3-1 1/4	(946)	8.30	(0.77)
3042	E	2-8 1/8	(815)	3-3 1/4	(997)	8.75	(0.81)

NOTE: Refer to Product Performance Chapter for International Building Code. Net Clear Opening drawings are pictured with the conversion tables.

Egress and Vent Openings: High Performance Sill Liner

CN		Opening Width		Opening Height HP Sill Liner		Egress Opening	
		ft - in	mm	ft - in	mm	ft^2	m^2
3212		2-10 1/8	(866)	0-9 1/4	(235)	2.19	(0.20)
3214		2-10 1/8	(866)	0-11 1/4	(286)	2.66	(0.25)
3216		2-10 1/8	(866)	1-1 1/4	(337)	3.14	(0.29)
3218		2-10 1/8	(866)	1-3 1/4	(387)	3.61	(0.34)
3220		2-10 1/8	(866)	1-5 1/4	(438)	4.08	(0.38)
3222		2-10 1/8	(866)	1-7 1/4	(489)	4.56	(0.42)
3224		2-10 1/8	(866)	1-9 1/4	(540)	5.03	(0.47)
3226		2-10 1/8	(866)	1-11 1/4	(591)	5.50	(0.51)
3228	E	2-10 1/8	(866)	2-1 1/4	(641)	5.98	(0.56)
3230	E	2-10 1/8	(866)	2-3 1/4	(692)	6.45	(0.60)
3232	E	2-10 1/8	(866)	2-5 1/4	(743)	6.92	(0.64)
3234	E	2-10 1/8	(866)	2-7 1/4	(794)	7.40	(0.69)
3236	E	2-10 1/8	(866)	2-9 1/4	(845)	7.87	(0.73)
3240	E	2-10 1/8	(866)	3-1 1/4	(946)	8.82	(0.82)
3242	E	2-10 1/8	(866)	3-3 1/4	(997)	9.29	(0.86)
3612		3-2 1/8	(967)	0-9 1/4	(235)	2.45	(0.23)
3614		3-2 1/8	(967)	0-11 1/4	(286)	2.98	(0.28)
3616		3-2 1/8	(967)	1-1 1/4	(337)	3.50	(0.33)
3618		3-2 1/8	(967)	1-3 1/4	(387)	4.03	(0.37)
3620		3-2 1/8	(967)	1-5 1/4	(438)	4.56	(0.42)
3622		3-2 1/8	(967)	1-7 1/4	(489)	5.09	(0.47)
3624		3-2 1/8	(967)	1-9 1/4	(540)	5.62	(0.52)
3626		3-2 1/8	(967)	1-11 1/4	(591)	6.15	(0.57)
3628	E	3-2 1/8	(967)	2-1 1/4	(641)	6.68	(0.62)
3630	E	3-2 1/8	(967)	2-3 1/4	(692)	7.21	(0.67)
3632	E	3-2 1/8	(967)	2-5 1/4	(743)	7.74	(0.72)
3634	E	3-2 1/8	(967)	2-7 1/4	(794)	8.27	(0.77)
3636	E	3-2 1/8	(967)	2-9 1/4	(845)	8.79	(0.82)
3640	E	3-2 1/8	(967)	3-1 1/4	(946)	9.85	(0.92)
3642	E	3-2 1/8	(967)	3-3 1/4	(997)	10.38	(0.96)
4012		3-6 1/8	(1069)	0-9 1/4	(235)	2.70	(0.25)
4014		3-6 1/8	(1069)	0-11 1/4	(286)	3.29	(0.31)
4016		3-6 1/8	(1069)	1-1 1/4	(337)	3.87	(0.36)
4018		3-6 1/8	(1069)	1-3 1/4	(387)	4.46	(0.41)
4020		3-6 1/8	(1069)	1-5 1/4	(438)	5.04	(0.47)
4022		3-6 1/8	(1069)	1-7 1/4	(489)	5.63	(0.52)
4024		3-6 1/8	(1069)	1-9 1/4	(540)	6.21	(0.58)
4026		3-6 1/8	(1069)	1-11 1/4	(591)	6.80	(0.63)
4028	E	3-6 1/8	(1069)	2-1 1/4	(641)	7.38	(0.69)
4030	E	3-6 1/8	(1069)	2-3 1/4	(692)	7.96	(0.74)
4032	E	3-6 1/8	(1069)	2-5 1/4	(743)	8.55	(0.79)
4034	E	3-6 1/8	(1069)	2-7 1/4	(794)	9.13	(0.85)
4036	E	3-6 1/8	(1069)	2-9 1/4	(845)	9.72	(0.90)

NOTE: Refer to Product Performance Chapter for International Building Code. Net Clear Opening drawings are pictured with the conversion tables.

Daylight Measurements: Double Hung

Clad Ultimate Double Hung Daylight Measurements			Width											
		CN	16		20		24		26		28	
		DLO	1-2 15/16	(379)	1-6 15/16	(481)	1-10 15/16	(583)	2-0 15/16	(633)	2-2 15/16	(684)
CN	DLO Height		Square Feet (Square Meters)									
12	0-10 15/16	(278)	1.13	(0.11)	1.44	(0.13)	1.74	(0.16)	1.89	(0.18)	2.05	(0.19)
14	1-0 15/16	(329)	1.34	(0.12)	1.70	(0.16)	2.06	(0.19)	2.24	(0.21)	2.42	(0.22)
16	1-2 15/16	(379)	1.55	(0.14)	1.96	(0.18)	2.38	(0.22)	2.59	(0.24)	2.79	(0.26)
18	1-4 15/16	(430)	1.76	(0.16)	2.23	(0.21)	2.70	(0.25)	2.93	(0.27)	3.17	(0.29)
20	1-6 15/16	(481)	1.96	(0.18)	2.49	(0.23)	3.02	(0.28)	3.28	(0.30)	3.54	(0.33)
22	1-8 15/16	(532)	2.17	(0.20)	2.75	(0.26)	3.33	(0.31)	3.63	(0.34)	3.92	(0.36)
24	1-10 15/16	(583)	2.38	(0.22)	3.02	(0.28)	3.65	(0.34)	3.97	(0.37)	4.29	(0.40)
26	2-0 15/16	(633)	2.59	(0.24)	3.28	(0.30)	3.97	(0.37)	4.32	(0.40)	4.66	(0.43)
28	2-2 15/16	(684)	2.79	(0.26)	3.54	(0.33)	4.29	(0.40)	4.66	(0.43)	5.04	(0.47)
30	2-4 15/16	(735)	3.00	(0.28)	3.81	(0.35)	4.61	(0.43)	5.01	(0.47)	5.41	(0.50)
32	2-6 15/16	(786)	3.21	(0.30)	4.07	(0.38)	4.93	(0.46)	5.36	(0.50)	5.79	(0.54)
34	2-8 15/16	(837)	3.42	(0.32)	4.33	(0.40)	5.25	(0.49)	5.70	(0.53)	6.16	(0.57)
36	2-10 15/16	(887)	3.62	(0.34)	4.59	(0.43)	5.56	(0.52)	6.05	(0.56)	6.53	(0.61)
40	3-2 15/16	(989)	4.04	(0.38)	5.12	(0.48)	6.20	(0.58)	6.74	(0.63)	7.28	(0.68)
42	3-4 15/16	(1040)	4.25	(0.39)	5.38	(0.50)	6.52	(0.61)	7.09	(0.66)	7.66	(0.71)

Clad Ultimate Double Hung Daylight Measurements			Width							
		CN	30		32		36		40	
		DLO	2-4 15/16	(735)	2-6 15/16	(786)	2-10 15/16	(887)	3-2 15/16	(989)
CN	DLO Height		Square Feet (Square Meters)							
12	0-10 15/16	(278)	2.20	(0.20)	2.35	(0.22)	2.65	(0.25)	2.96	(0.27)
14	1-0 15/16	(329)	2.60	(0.24)	2.78	(0.26)	3.14	(0.29)	3.50	(0.32)
16	1-2 15/16	(379)	3.00	(0.28)	3.21	(0.30)	3.62	(0.34)	4.04	(0.38)
18	1-4 15/16	(430)	3.40	(0.32)	3.64	(0.34)	4.11	(0.38)	4.58	(0.43)
20	1-6 15/16	(481)	3.81	(0.35)	4.07	(0.38)	4.59	(0.43)	5.12	(0.48)
22	1-8 15/16	(532)	4.21	(0.39)	4.50	(0.42)	5.08	(0.47)	5.66	(0.53)
24	1-10 15/16	(583)	4.61	(0.43)	4.93	(0.46)	5.56	(0.52)	6.20	(0.58)
26	2-0 15/16	(633)	5.01	(0.47)	5.36	(0.50)	6.05	(0.56)	6.74	(0.63)
28	2-2 15/16	(684)	5.41	(0.50)	5.79	(0.54)	6.53	(0.61)	7.28	(0.68)
30	2-4 15/16	(735)	5.81	(0.54)	6.22	(0.58)	7.02	(0.65)	7.82	(0.73)
32	2-6 15/16	(786)	6.22	(0.58)	6.65	(0.62)	7.51	(0.70)	8.36	(0.78)
34	2-8 15/16	(837)	6.62	(0.61)	7.08	(0.66)	7.99	(0.74)	8.91	(0.83)
36	2-10 15/16	(887)	7.02	(0.65)	7.51	(0.70)	8.48	(0.79)	9.45	(0.88)
40	3-2 15/16	(989)	7.82	(0.73)	8.36	(0.78)	9.45	(0.88)	N/A	
42	3-4 15/16	(1040)	8.23	(0.76)	8.79	(0.82)	9.93	(0.92)	N/A	

Daylight Measurements: Transom

Clad Ultimate Double Hung Transom Daylight Measurements			Width							
			CN	16		20		24		
			DLO	1-2 15/16	(379)	1-6 15/16	(481)	1-10 15/16	(583)	
CN	DLO Height		Square Feet (Square Meters)							
12	1-0 15/16	(329)		1.34	(0.12)	1.70	(0.16)	2.06	(0.19)	
20	1-8 15/16	(532)		2.17	(0.20)	2.75	(0.26)	3.33	(0.31)	

Clad Ultimate Double Hung Transom Daylight Measurements			Width							
			CN	26		28		30		
			DLO	2-0 15/16	(633)	2-2 15/16	(684)	2-4 15/16	(735)	
CN	DLO Height		Square Feet (Square Meters)							
12	1-0 15/16	(329)		2.24	(0.21)	2.42	(0.22)	2.60	(0.24)	
20	1-8 15/16	(532)		3.63	(0.34)	3.92	(0.36)	4.21	(0.39)	

Clad Ultimate Double Hung Transom Daylight Measurements			Width							
			CN	32		36		40		
			DLO	2-6 15/16	(786)	2-10 15/16	(887)	3-2 15/16	(989)	
CN	DLO Height		Square Feet (Square Meters)							
12	1-0 15/16	(329)		2.78	(0.26)	3.14	(0.29)	3.50	(0.32)	
20	1-8 15/16	(532)		4.50	(0.42)	5.08	(0.47)	5.66	(0.53)	

Daylight Measurements: Picture

Clad Ultimate Double Hung Picture Daylight Measurements			Width											
			CN	40		48		52		60		68	
			DLO	2-10 15/16	(887)	3-6 15/16	(1091)	3-10 15/16	(1192)	4-6 15/16	(1395)	5-2 15/16	(1599)
CN	DLO Height		Square Feet (Square Meters)										
38	2-8 5/16	(820)		7.83	(0.73)	9.63	(0.89)	10.53	(0.98)	12.32	(1.14)	14.11	(1.31)
42	3-0 5/16	(922)		8.80	(0.82)	10.82	(1.01)	11.83	(1.10)	13.85	(1.29)	15.86	(1.47)
46	3-4 5/16	(1023)		9.78	(0.91)	12.01	(1.12)	13.13	(1.22)	15.37	(1.43)	17.61	(1.64)
50	3-8 5/16	(1125)		10.75	(1.00)	13.21	(1.23)	14.44	(1.34)	16.90	(1.57)	19.36	(1.80)
54	4-0 5/16	(1226)		11.72	(1.09)	14.40	(1.34)	15.74	(1.46)	18.42	(1.71)	21.11	(1.96)
58	4-4 5/16	(1328)		12.69	(1.18)	15.59	(1.45)	17.04	(1.58)	19.95	(1.85)	22.85	(2.12)
62	4-8 5/16	(1430)		13.66	(1.27)	16.78	(1.56)	18.35	(1.70)	21.48	(2.00)	24.60	(2.29)
66	5-0 5/16	(1531)		14.63	(1.36)	17.98	(1.67)	19.65	(1.83)	23.00	(2.14)	26.35	(2.45)
70	5-4 5/16	(1633)		15.60	(1.45)	19.17	(1.78)	20.96	(1.95)	24.53	(2.28)	28.10	(2.61)
74	5-8 5/16	(1734)		16.57	(1.54)	20.36	(1.89)	22.26	(2.07)	26.05	(2.42)	29.85	(2.77)
78	6-0 5/16	(1836)		17.54	(1.63)	21.55	(2.00)	23.56	(2.19)	27.58	(2.56)	31.60	(2.94)
86	6-8 5/16	(2039)		19.48	(1.81)	23.94	(2.22)	26.17	(2.43)	30.63	(2.85)	35.09	(3.26)
90	7-0 5/16	(2141)		20.45	(1.90)	25.13	(2.33)	27.47	(2.55)	32.16	(2.99)	36.84	(3.42)

Minimum and Maximum Guidelines, Certified Sizes and Ratings: Double Hung Units

Minimum and Maximum Rough Opening Guidelines - Operable Units													
Unit Type		Width		x	Height		Width		x	Height		Max Glass	
		in	mm	×	in	mm	in	mm	×	in	mm	Sq. Feet	Sq. Meters
CUDH	1/8" (3) e.g. Low E II	14 3/8	(365)	×	24 7/8	(632)	46 3/8	(1178)	×	96 7/8	(2461)	10	0.929
	3/16" (5) e.g. tint	14 3/8	(365)	×	24 7/8	(632)	46 3/8	(1178)	×	96 7/8	(2461)	9	0.836

Certified Sizes and Ratings									
Unit Type	Frame Height			Frame Width					
				CN	in	mm	CN	in	mm
	CN	in	mm	30	35 5/8	(905)	32	37 3/8	(949)
CUDH	26	60 7/8	(1534)	LC-PG40-H			LC-PG40-H		
	36	80 3/8	(2042)	LC-PG40-H			LC-PG30-H		

Minimum and Maximum Rough Opening Guidelines - Transom Units													
Unit Type		Width		x	Height		Width		x	Height		Max Glass	
		in	mm	×	in	mm	in	mm	×	in	mm	Sq. Feet	Sq. Meters
CUDHT	.70" IG in 1 5/8" (16) Sash	14 3/8	(365)	×	14 3/16	(360)	121	(3073)	×	60	(1524)	25	2.323

Certified Sizes and Ratings						
Unit Type	Frame Height			Frame Width		
				CN	in	mm
	CN	in	mm	-	69 3/8	(1762)
CUDHT	-	27 11/16	(703)	LC-PG40-TR		

Minimum and Maximum Rough Opening Guidelines - Picture Unit													
Unit Type		Width		x	Height		Width		x	Height		Max Glass	
		in	mm	×	in	mm	in	mm	×	in	mm	Sq. Feet	Sq. Meters
CUDHP	1" (25) IG in 2" (51) Sash	14 3/8	(365)	×	15 1/2	(394)	121	(3073)	×	120 1/2	(3061)	49	4.552

Certified Sizes and Ratings						
Unit Type	Frame Height			Frame Width		
				CN	in	mm
	CN	in	mm	-	69 3/8	(1762)
CUDHP	-	80 3/8	(2042)	CW-PG40-FW		

Impact Zone 3 - Minimum and Maximum Guidelines, Certified Sizes and Ratings

IZ3 Minimum and Maximum Rough Opening Guidelines - Operable Units														
Unit Type		Width		x	Height		Width		x	Height		Max Glass	
		in	mm	×	in	mm	in	mm	×	in	mm	Sq. Feet	Sq. Meters
CUDH	Storm Plus IZ3	22 3/8	(568)	×	24 7/8	(632)	46 3/8	(1178)	×	96 3/8	(2448)	7 9/16	0.701

IZ3 Certified Sizes and Ratings									
Unit Type	Frame Height			Frame Width					
				CN	in	mm	CN	in	mm
	CN	in	mm	32	37 3/8	(949)	40	45 3/8	(1153)
CUDH	26	60 3/8	(1534)	LC-PG55-H			LC-PG55-H		
	34	76 3/8	(1940)	LC-PG55-H			N/A		

Impact Glazing Zone 3 (IZ3):

Frame:

- Sealant added at sill liner
- Sill brackets added for bottom sash retention
- Screws through the jamb liner to reinforce the frame

Sash:

- Top check rail has different profile for interlock
- Bottom check rail has profile for interlock
- Painted stainless steel stamped interlock for top sash for sash retention
- Mil finish stainless steel stamped interlock for bottom sash retention
- End plate with over molded stainless steel tilt latch blade
- Long cladding clip screws through it at check rail to reinforce stiles
- Stainless steel tilt pins for sash retention
- Different check rail cladding connector profile for interlock
- Keeper insert to keep lock from disengaging during impact

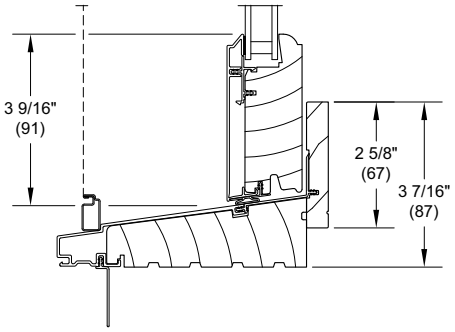

HP Sill Liner

Glazing:

- PVC tube in check rail to reinforce check rail and to protect tilt cord from sealant
- Backfilled with Dow 995 silicone sealant
- Interior glass used is laminated with a PVB inner layer
- Exterior glass is standard annealed. All CUDH operator sizes certified are OK with annealed glass. Optional tempered glass is available
- Simulated Divided Lites are available on IZ3 products
- Grilles Between the Glass are not available in IZ3 unit

Impact Zone 3 - Min/Max Guidelines, Certified Sizes and Ratings: Transom/Picture

IZ3 Minimum and Maximum Rough Opening Guidelines - Transom Units													
Unit Type		Width		x	Height		Width		x	Height		Max Glass	
		in	mm	×	in	mm	in	mm	×	in	mm	Sq. Feet	Sq. Meters
CUDHT	Storm Plus IZ3	14 3/8	(365)	×	14 13/16	(376)	74 3/8	(1889)	×	28 3/16	(716)	9 7/16	0.878

IZ3 Certified Sizes and Ratings						
Unit Type	Frame Height			Frame Width		
				CN	in	mm
	CN	in	mm	-	73 3/8	(1864)
CUDHT	20	27 3/8	(695)	LC-PG55-TR		

IZ3 Minimum and Maximum Rough Opening Guidelines - Picture Units													
Unit Type		Width		x	Height		Width		x	Height		Max Glass	
		in	mm	×	in	mm	in	mm	×	in	mm	Sq. Feet	Sq. Meters
CUDHP	Storm Plus IZ3	14 3/8	(365)	×	15 1/2	(394)	121	(3073)	×	120 1/2	(3061)	38 5/16	3.559

IZ3 Certified Sizes and Ratings									
Unit Type	Frame Height			Frame Width					
				CN	in	mm	CN	in	mm
	CN	in	mm	-	60	(1524)	68	69.375	(1762)
CUDHP	78	80 3/8	(2042)	CW-PG55-FW			CW-PG55-FW		
	-	108	(2743)	CW-PG55-FW			N/A		

Measurement Conversions

Double Hung Operating Unit						
Unit Measurements		Width		Height		
From	To					
Rough Opening		**in**	**mm**		**in**	**mm**
OM of Frame	Rough Opening	+ 1	(25)		+ 1/2	(13)
Masonry Opening	Rough Opening	+ 1/2	(13)		+ 1/4	(06)
Masonry Opening w/BMC	Rough Opening	-2 1/8	(54)		-1 11/16	(43)
Masonry Opening w/Flat Casing	Rough Opening	-6 1/2	(165)		-3 7/8	(98)
Frame		**in**	**mm**		**in**	**mm**
OM of BMC	OM of Frame	-2 5/8	(67)		-1 15/16	(49)
OM of Flat Casing	OM of Frame	-6	(152)		-3 5/8	(92)
Daylight Opening	OM of Frame	+ 6 7/16	(164)	× 2	+ 10 1/2	(267)
Top Sash		**in**	**mm**		**in**	**mm**
OM of Frame	OM of Top Sash	-2 29/32	(74)	÷ 2	-1 5/16	(33)
Daylight Opening	OM of Top Sash	+ 3 17/32	(90)		+ 3 31/32	(101)
Bottom Sash		**in**	**mm**		**in**	**mm**
OM of Frame	OM of Bottom Sash	-2 29/32	(74)	÷ 2	+ 7/16	(11)
Daylight Opening	OM of Bottom Sash	+ 3 17/32	(90)		+ 5 11/16	(145)
Glass		**in**	**mm**		**in**	**mm**
Daylight Opening	Glass	+ 1 1/16	(27)		+ 1 1/16	(27)
Screen		**in**	**mm**		**in**	**mm**
OM of Frame	OM of Screen	-2 1/16	(52)		-1 7/8	(48)
Daylight Opening	OM of Screen	+ 4 3/8	(111)	× 2	+ 8 5/8	(219)
Half Screen		**in**	**mm**		**in**	**mm**
OM of Frame	OM of Screen	-2 1/16	(52)	÷ 2	-3/16	(05)
Daylight Opening	OM of Screen	+ 4 3/8	(111)		+ 5 1/16	(129)
Combination		**in**	**mm**		**in**	**mm**
OM of Frame	OM of Combination	-1 15/16	(49)		-1 25/32	(45)
Daylight Opening	OM of Combination	+ 4 1/2	(114)	× 2	+ 8 23/32	(221)

NOTE: The following formula will properly size a standard cottage style double hung:

Formula

1. Select the standard size double hung that will fit the rough opening
2. Add the top and the bottom glass heights together
3. Divide the total glass height by the ration of the top sash
4. Round to the nearest standard glass height
5. Subtract from the total glass height

Example

1. CUDH with a 2/5 - 3/5 cottage style. If the rough opening is 2’-6 3/8" x 4’-8 7/8" (RO for a CUDH 2424)
2. 24" + 24" = 48"
3. 48" divide by 2/5 (0.4) = 19 13/64 (20)
4. 48" - 20" = 28"
5. The top sash will be a 2420 and the bottom sash will be a 2428. The call number for the example is: CUDH 2420/28.

Measurement Conversions

Double Hung Transoms					
Unit Measurements		Width		Height	
From	To				
Rough Opening		**in**	**mm**	**in**	**mm**
OM of Frame	Rough Opening	+ 1	(25)	+ 1/2	(13)
Masonry Opening	Rough Opening	+ 1/2	(13)	+ 1/4	(06)
Masonry Opening w/BMC	Rough Opening	-2 1/8	(54)	-1 11/16	(43)
Masonry Opening w/Flat Casing	Rough Opening	-6 1/2	(165)	-3 7/8	(98)
Frame		**in**	**mm**	**in**	**mm**
OM of BMC	OM of Frame	-2 5/8	(67)	-1 15/16	(49)
OM of Flat Casing	OM of Frame	-6	(152)	-3 5/8	(92)
Sash		**in**	**mm**	**in**	**mm**
OM of Frame	OM of Sash	-2 29/32	(74)	-2 3/8	(61)
Daylight Opening	OM of Sash	+ 3 17/32	(90)	+ 4 3/8	(111)
Glass		**in**	**mm**	**in**	**mm**
Daylight Opening	Glass	+ 1 1/16	(27)	+ 1 1/16	(27)

Double Hung Picture					
Unit Measurements		Width		Height	
From	To				
Rough Opening		**in**	**mm**	**in**	**mm**
OM of Frame	Rough Opening	+ 1	(25)	+ 1/2	(13)
Masonry Opening	Rough Opening	+ 1/2	(13)	+ 1/4	(06)
Masonry Opening w/BMC	Rough Opening	-2 1/8	(54)	-1 11/16	(43)
Masonry Opening w/Flat Casing	Rough Opening	-6 1/2	(165)	-3 7/8	(98)
Frame		**in**	**mm**	**in**	**mm**
OM of BMC	OM of Frame	-2 5/8	(67)	-1 15/16	(49)
OM of Flat Casing	OM of Frame	-6	(152)	-3 5/8	(92)
Daylight Opening	OM of Frame	+ 6 7/16	(164)	+ 8 3/32	(205)
Sash		**in**	**mm**	**in**	**mm**
OM of Frame	OM of Sash	-1 9/16	(40)	-2 9/16	(65)
Daylight Opening	OM of Sash	+ 4 7/8	(124)	+ 5 17/32	(140)
Glass		**in**	**mm**	**in**	**mm**
Daylight Opening	Glass	+ 1 1/16	(27)	+ 1 1/16	(27)

Measurement Conversions

Egress Formulas

Clear Opening Width:

- Clear Opening Width = Frame OM Width - 3 9 /32" (83)

Clear Opening Height:

- Units with Standard Sill Liner
  - Clear Opening Height = ((Frame OM Height - 8 3/8" (213)) / 2) - 1 7/8 (48)
- Units with High Performance Sill Liner
  - Clear Opening Height = ((Frame OM Height - 8 3/8" (213)) / 2) - 2 3/4" (70)

Vent Opening

- Vent Width = Jamb to Jamb
- Vent Height = Top of Sill Liner to btm of btm sash fully opened
- Vent Width X Vent Height / 144

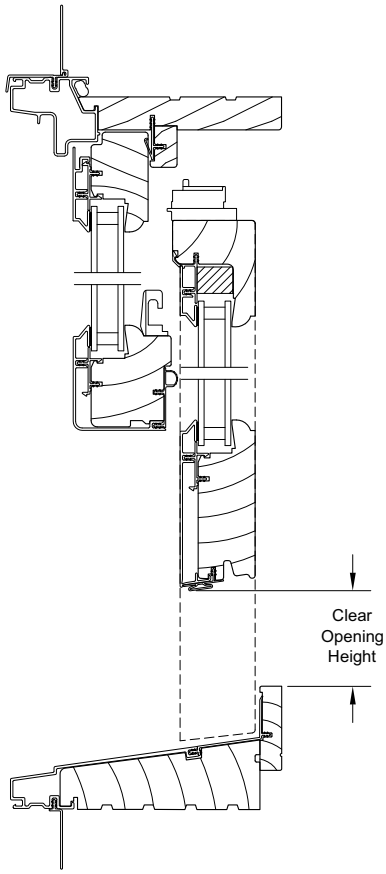

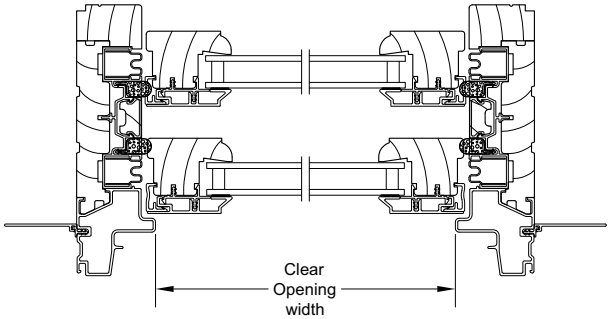

Standard Unit Measurements: Double Hung

Standard Double Hung Unit Measurements								
Width								
CN	Masonry Opening		Rough Opening		Frame Size		Daylight Opening	
	ft - in	mm	ft - in	mm	ft - in	mm	ft - in	mm
16	1-9 7/8	(556)	1-10 3/8	(568)	1-9 3/8	(543)	1-2 15/16	(379)
20	2-1 7/8	(657)	2-2 3/8	(670)	2-1 3/8	(645)	1-6 15/16	(481)
24	2-5 7/8	(759)	2-6 3/8	(772)	2-5 3/8	(746)	1-10 15/16	(583)
26	2-7 7/8	(810)	2-8 3/8	(822)	2-7 3/8	(797)	2-0 15/16	(633)
28	2-9 7/8	(860)	2-10 3/8	(873)	2-9 3/8	(848)	2-2 15/16	(684)
30	2-11 7/8	(911)	3-0 3/8	(924)	2-11 3/8	(899)	2-4 15/16	(735)
32	3-1 7/8	(962)	3-2 3/8	(975)	3-1 3/8	(949)	2-6 15/16	(786)
36	3-5 7/8	(1064)	3-6 3/8	(1076)	3-5 3/8	(1051)	2-10 15/16	(887)
40	3-9 7/8	(1165)	3-10 3/8	(1178)	3-9 3/8	(1153)	3-2 15/16	(989)

Standard Double Hung Unit Measurements								
Height								
CN	Masonry Opening		Rough Opening		Frame Size		Daylight Opening	
	ft - in	mm	ft - in	mm	ft - in	mm	ft - in	mm
12	2-8 5/8	(829)	2-8 7/8	(835)	2-8 3/8	(822)	0-10 15/16	(278)
14	3-0 5/8	(930)	3-0 7/8	(937)	3-0 3/8	(924)	1-0 15/16	(329)
16	3-4 5/8	(1032)	3-4 7/8	(1038)	3-4 3/8	(1026)	1-2 15/16	(379)
18	3-8 5/8	(1133)	3-8 7/8	(1140)	3-8 3/8	(1127)	1-4 15/16	(430)
20	4-0 5/8	(1235)	4-0 7/8	(1241)	4-0 3/8	(1229)	1-6 15/16	(481)
22	4-4 5/8	(1337)	4-4 7/8	(1343)	4-4 3/8	(1330)	1-8 15/16	(532)
24	4-8 5/8	(1438)	4-8 7/8	(1445)	4-8 3/8	(1432)	1-10 15/16	(583)
26	5-0 5/8	(1540)	5-0 7/8	(1546)	5-0 3/8	(1534)	2-0 15/16	(633)
28	5-4 5/8	(1641)	5-4 7/8	(1648)	5-4 3/8	(1635)	2-2 15/16	(684)
30	5-8 5/8	(1743)	5-8 7/8	(1749)	5-8 3/8	(1737)	2-4 15/16	(735)
32	6-0 5/8	(1845)	6-0 7/8	(1851)	6-0 3/8	(1838)	2-6 15/16	(786)
34	6-4 5/8	(1946)	6-4 7/8	(1953)	6-4 3/8	(1940)	2-8 15/16	(837)
36	6-8 5/8	(2048)	6-8 7/8	(2054)	6-8 3/8	(2042)	2-10 15/16	(887)
40	7-4 5/8	(2251)	7-4 7/8	(2257)	7-4 3/8	(2245)	3-2 15/16	(989)
42	7-8 5/8	(2353)	7-8 7/8	(2359)	7-8 3/8	(2346)	3-4 15/16	(1040)

Standard Unit Measurements: Transom/Picture

Standard Double Hung Transom Unit Measurements								
Width								
CN	Masonry Opening		Rough Opening		Frame Size		Daylight Opening	
	ft - in	mm	ft - in	mm	ft - in	mm	ft - in	mm
16	1-9 7/8	(556)	1-10 3/8	(568)	1-9 3/8	(543)	1-2 15/16	(379)
20	2-1 7/8	(657)	2-2 3/8	(670)	2-1 3/8	(645)	1-6 15/16	(481)
24	2-5 7/8	(759)	2-6 3/8	(772)	2-5 3/8	(746)	1-10 15/16	(583)
26	2-7 7/8	(810)	2-8 3/8	(822)	2-7 3/8	(797)	2-0 15/16	(633)
28	2-9 7/8	(860)	2-10 3/8	(873)	2-9 3/8	(848)	2-2 15/16	(684)
30	2-11 7/8	(911)	3-0 3/8	(924)	2-11 3/8	(899)	2-4 15/16	(735)
32	3-1 7/8	(962)	3-2 3/8	(975)	3-1 3/8	(949)	2-6 15/16	(786)
36	3-5 7/8	(1064)	3-6 3/8	(1076)	3-5 3/8	(1051)	2-10 15/16	(887)
40	3-9 7/8	(1165)	3-10 3/8	(1178)	3-9 3/8	(1153)	3-2 15/16	(989)

Standard Double Hung Transom Unit Measurements								
Height								
CN	Masonry Opening		Rough Opening		Frame Size		Daylight Opening	
	ft - in	mm	ft - in	mm	ft - in	mm	ft - in	mm
12	1-7 15/16	(506)	1-8 3/16	(513)	1-7 11/16	(500)	1-0 15/16	(329)
20	2-3 15/16	(710)	2-4 3/16	(716)	2-3 11/16	(703)	1-8 15/16	(532)

Standard Double Hung Picture Unit Measurements								
Width								
CN	Masonry Opening		Rough Opening		Frame Size		Daylight Opening	
	ft - in	mm	ft - in	mm	ft - in	mm	ft - in	mm
40	3-5 7/8	(1064)	3-6 3/8	(1076)	3-5 3/8	(1051)	2-10 15/16	(887)
48	4-1 7/8	(1267)	4-2 3/8	(1280)	4-1 3/8	(1254)	3-6 15/16	(1091)
52	4-5 7/8	(1368)	4-6 3/8	(1381)	4-5 3/8	(1356)	3-10 15/16	(1192)
60	5-1 7/8	(1572)	5-2 3/8	(1584)	5-1 3/8	(1559)	4-6 15/16	(1395)
68	5-9 7/8	(1775)	5-10 3/8	(1788)	5-9 3/8	(1762)	5-2 15/16	(1599)

Standard Double Hung Picture Unit Measurements								
Height								
CN	Masonry Opening		Rough Opening		Frame Size		Daylight Opening	
	ft - in	mm	ft - in	mm	ft - in	mm	ft - in	mm
38	3-4 5/8	(1032)	3-4 7/8	(1038)	3-4 3/8	(1026)	2-8 1/4	(819)
42	3-8 5/8	(1133)	3-8 7/8	(1140)	3-8 3/8	(1127)	3-0 1/4	(921)
46	4-0 5/8	(1235)	4-0 7/8	(1241)	4-0 3/8	(1229)	3-4 1/4	(1022)
50	4-4 5/8	(1337)	4-4 7/8	(1343)	4-4 3/8	(1330)	3-8 1/4	(1124)
54	4-8 5/8	(1438)	4-8 7/8	(1445)	4-8 3/8	(1432)	4-0 1/4	(1226)
58	5-0 5/8	(1540)	5-0 7/8	(1546)	5-0 3/8	(1534)	4-4 1/4	(1327)
62	5-4 5/8	(1641)	5-4 7/8	(1648)	5-4 3/8	(1635)	4-8 1/4	(1429)
66	5-8 5/8	(1743)	5-8 7/8	(1749)	5-8 3/8	(1737)	5-0 1/4	(1530)
70	6-0 5/8	(1845)	6-0 7/8	(1851)	6-0 3/8	(1838)	5-4 1/4	(1632)
74	6-4 5/8	(1946)	6-4 7/8	(1953)	6-4 3/8	(1940)	5-8 1/4	(1734)
78	6-8 5/8	(2048)	6-8 7/8	(2054)	6-8 3/8	(2042)	6-0 1/4	(1835)
86	7-4 5/8	(2251)	7-4 7/8	(2257)	7-4 3/8	(2245)	6-8 1/4	(2038)
90	7-8 5/8	(2353)	7-8 7/8	(2359)	7-8 3/8	(2346)	7-0 1/4	(2140)

Section Details: Operating

Scale: 3" = 1' 0"

Double Hung

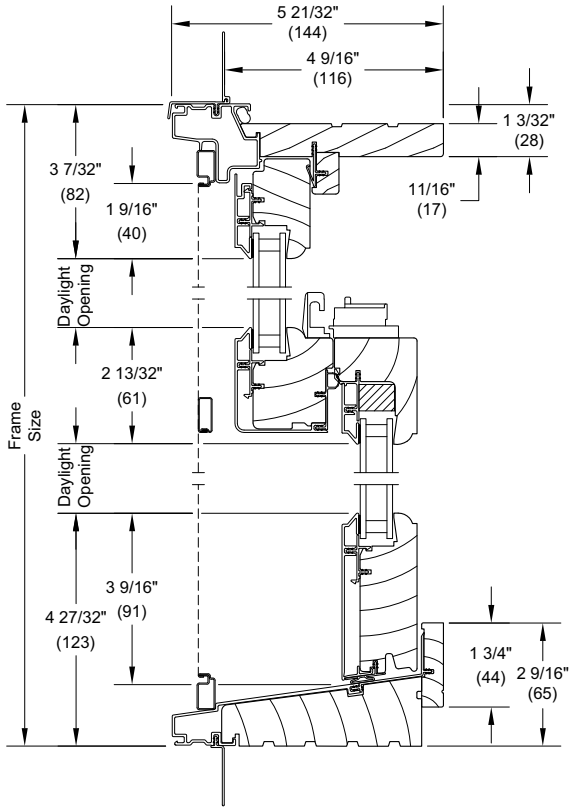

Head Jamb and Sill

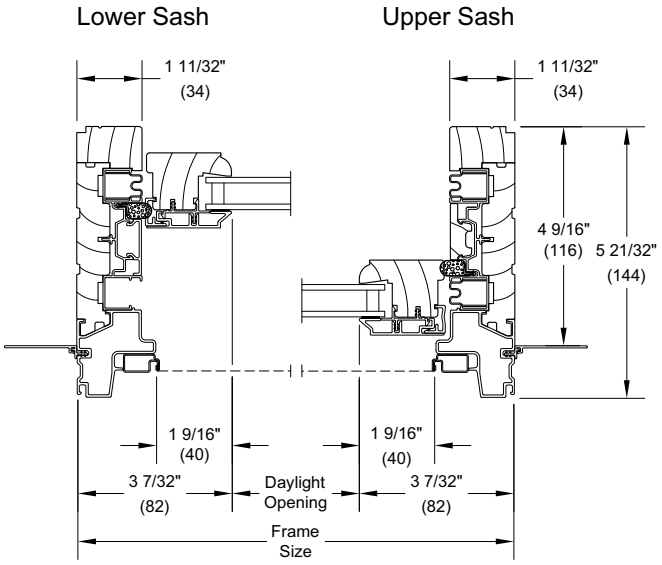

Jambs

Single Hung

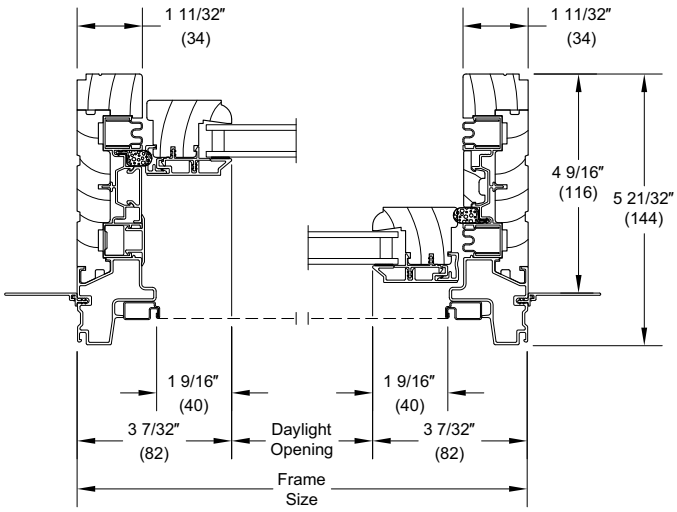

Jambs

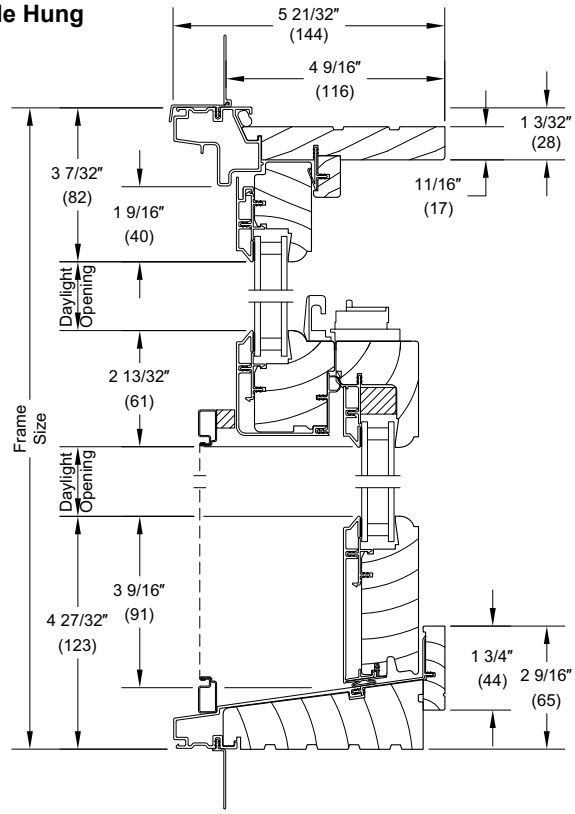

Head Jamb and Sill

Section Details: 1 5/8" Transom and 2" Picture

Scale: 3" = 1' 0"

1 5/8" Transom

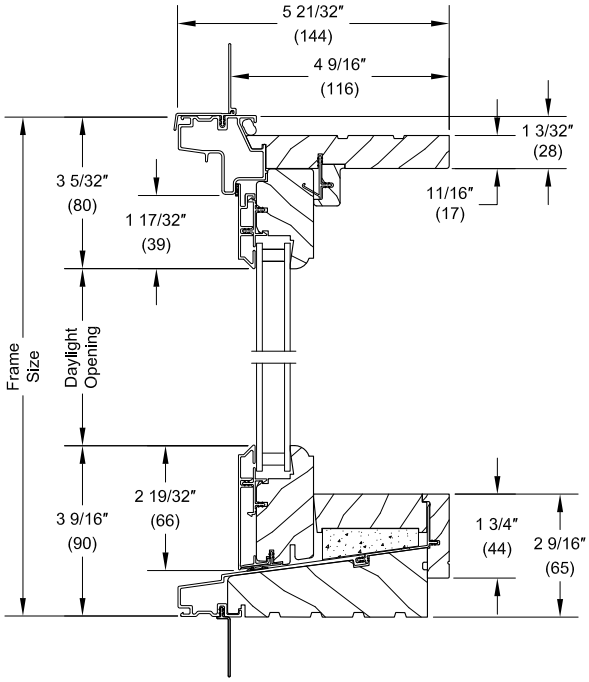

Head Jamb and Sill

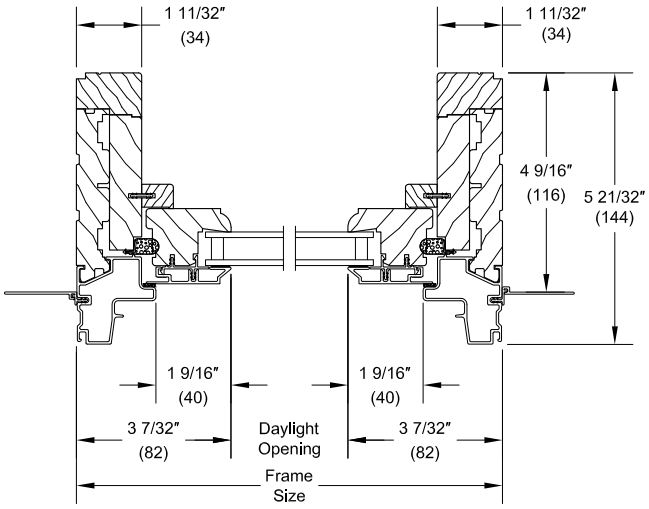

Jambs

2" Picture

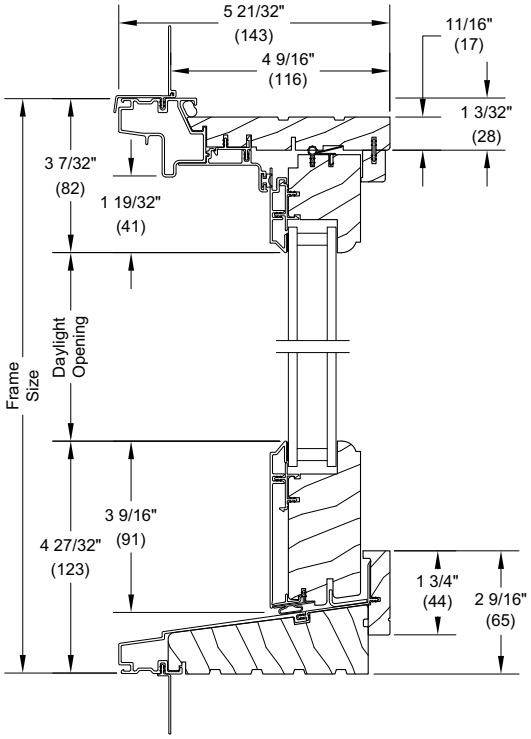

Head Jamb and Sill

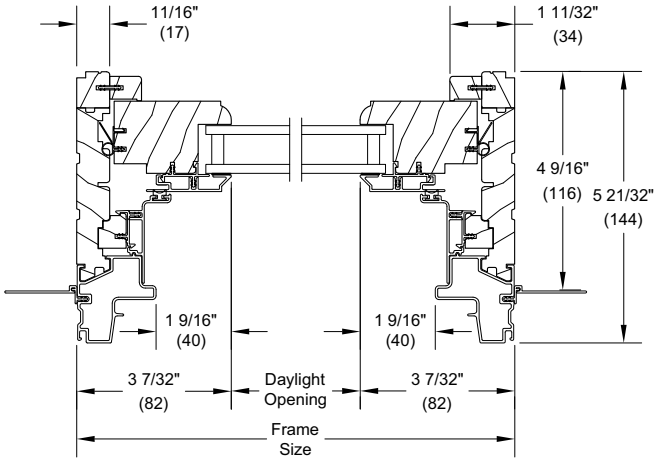

Jambs

Section Details: Operating Impact Zone 3

Scale: 3" = 1' 0"

Double Hung

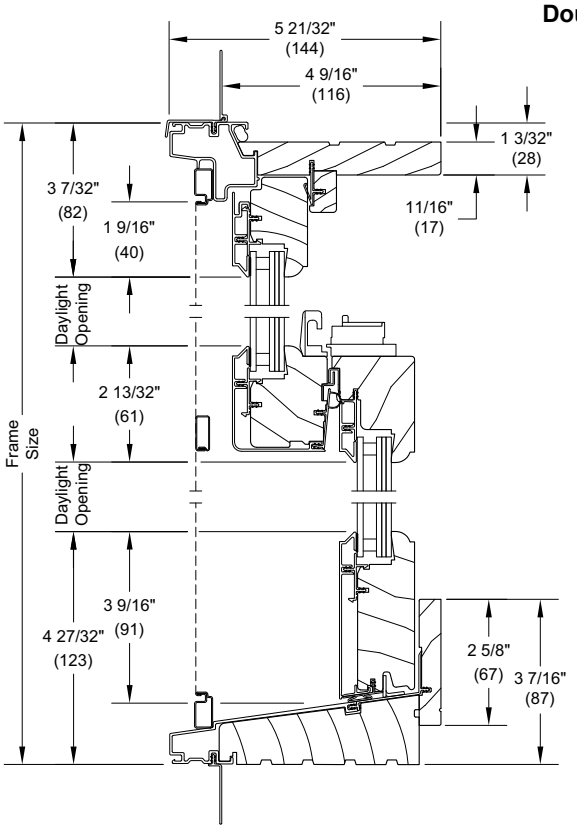

Head Jamb and Sill

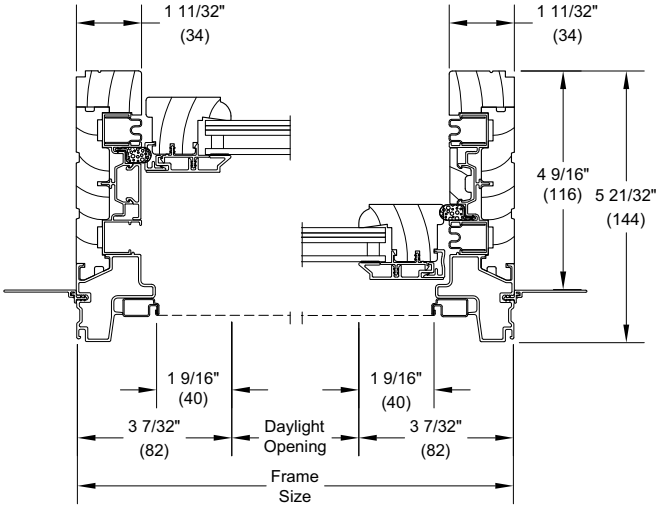

Jambs

Single Hung

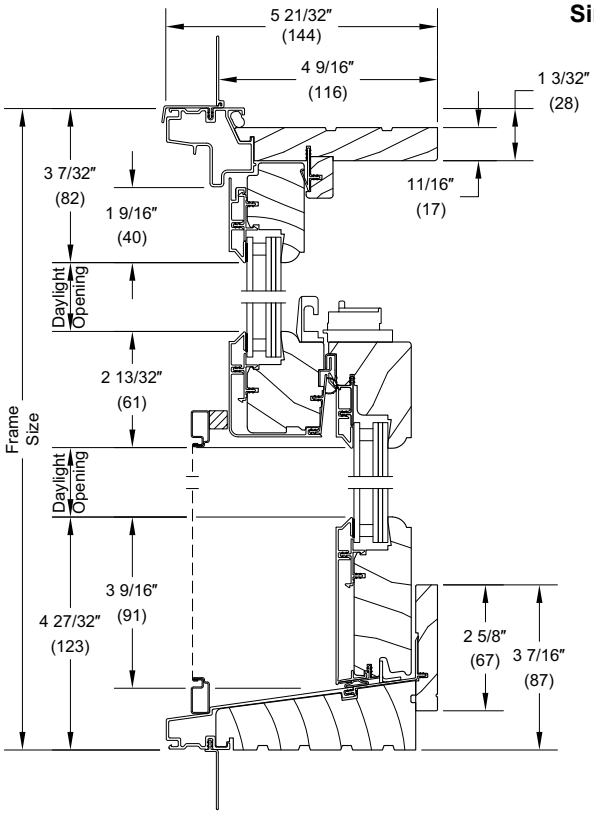

Head Jamb and Sill

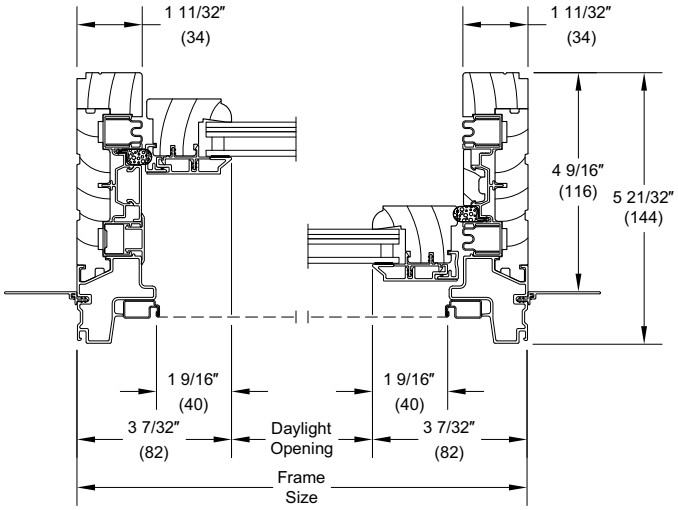

Jambs

Section Details: Transom/Picture Impact Zone 3

Scale: 3" = 1' 0"

Transom

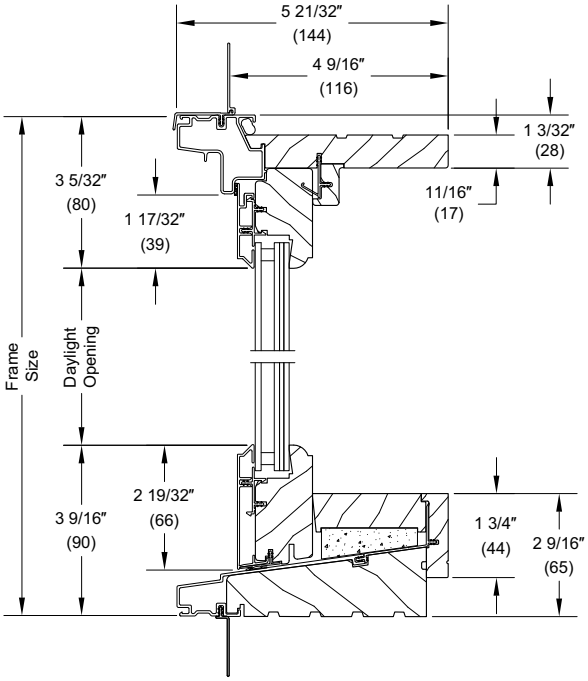

Head Jamb and Sill

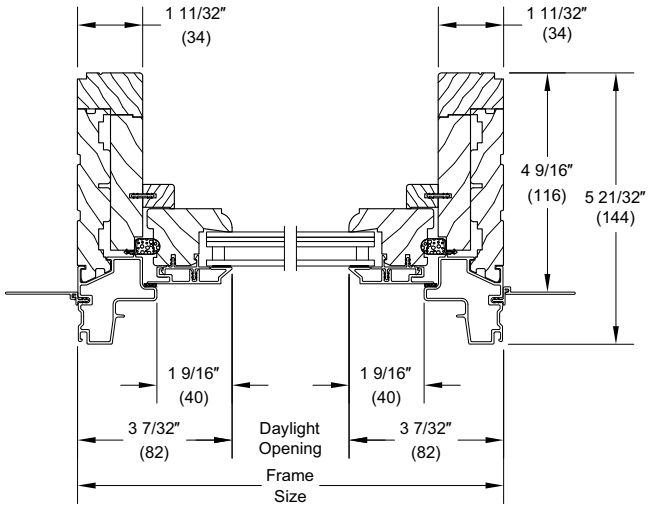

Jambs

Picture

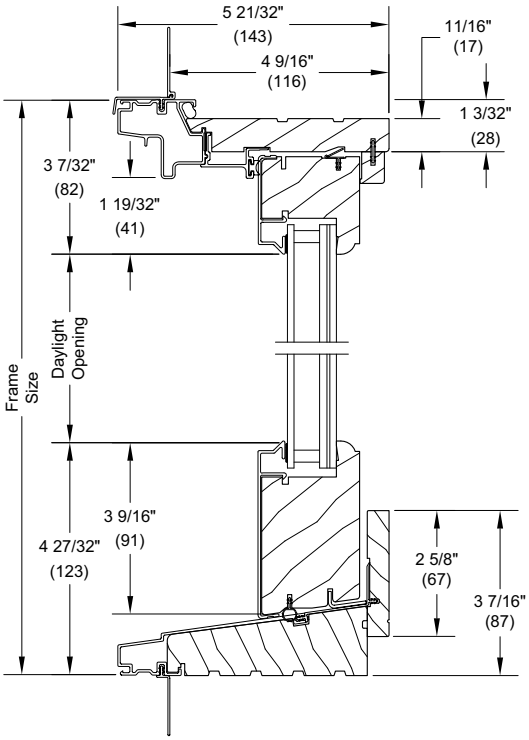

Head Jamb and Sill

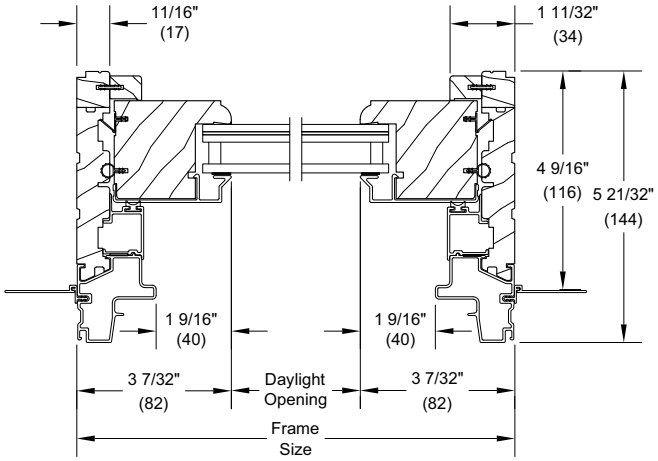

Jambs

Section Details: Casings

Scale: 3" = 1' 0"

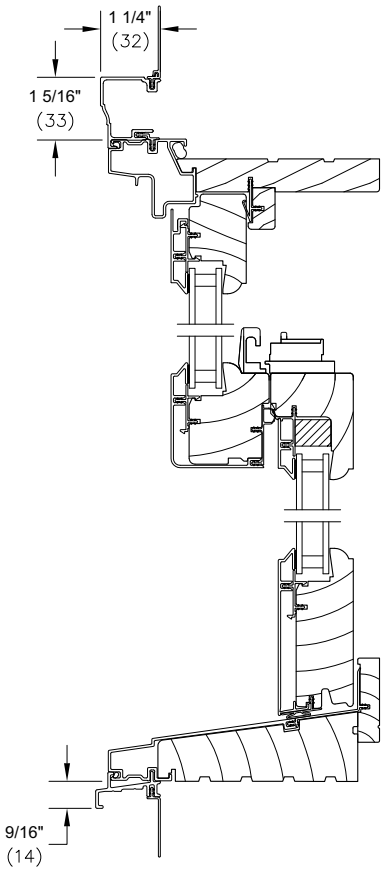

Head Jamb and Sill
with Clad Brick Mould Casing

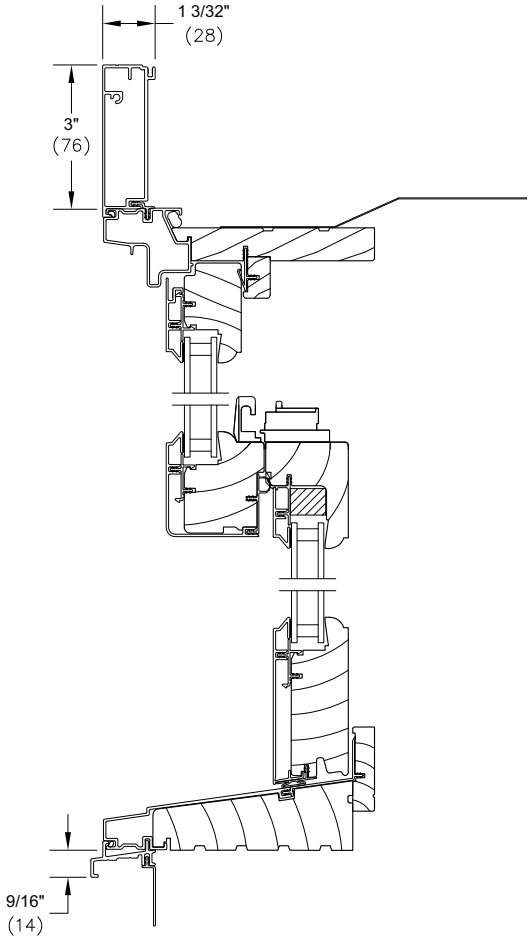

Head Jamb and Sill
with Clad Flat Casing

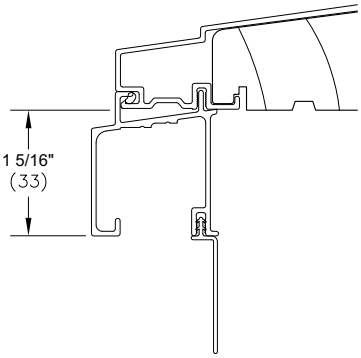

Sill with (A217) simulated thick subsill
Scale: 2:1

Section Details: 6 9/16" Combination

Scale: 3" = 1' 0"

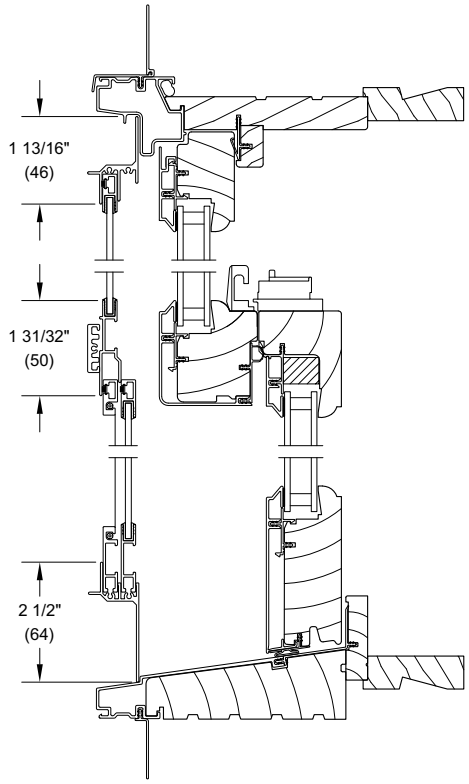

Head Jamb and Sill

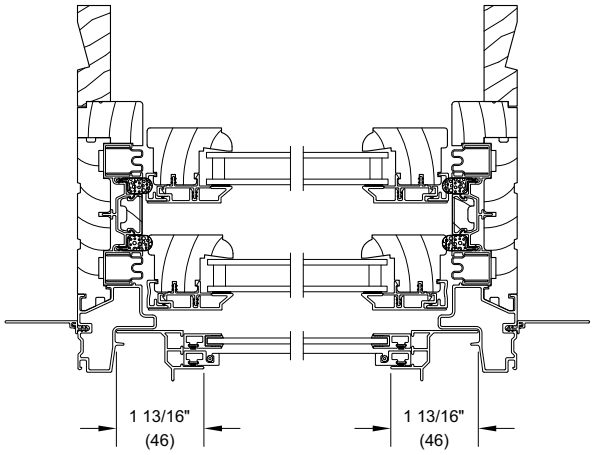

Jambs

Section Details: Mullions

Scale: 3" - 1' 0"

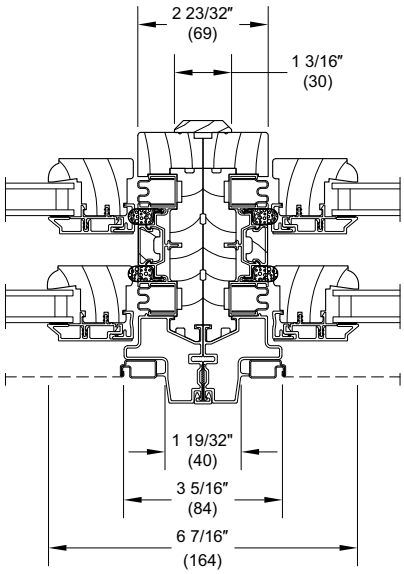

Vertical Mullion
Operator/Operator

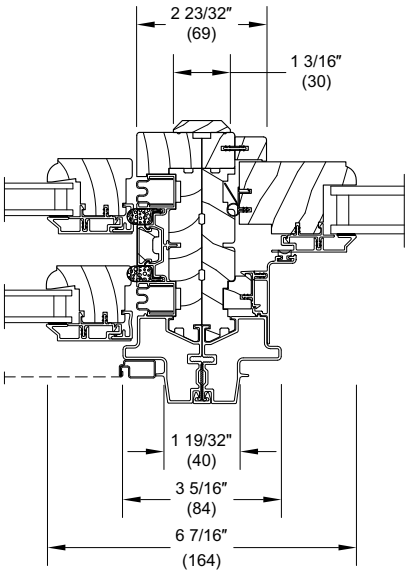

Vertical Mullion
Operator/Picture

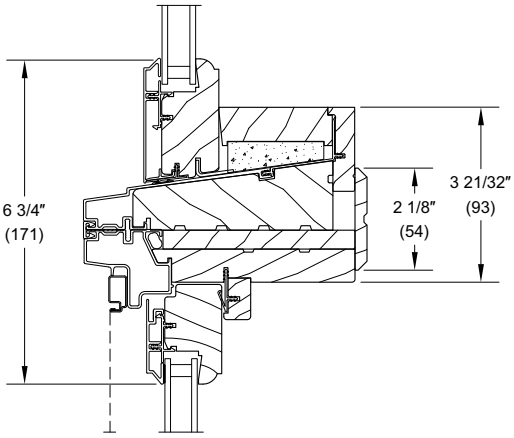

Horizontal Mullion
Transom/Operator

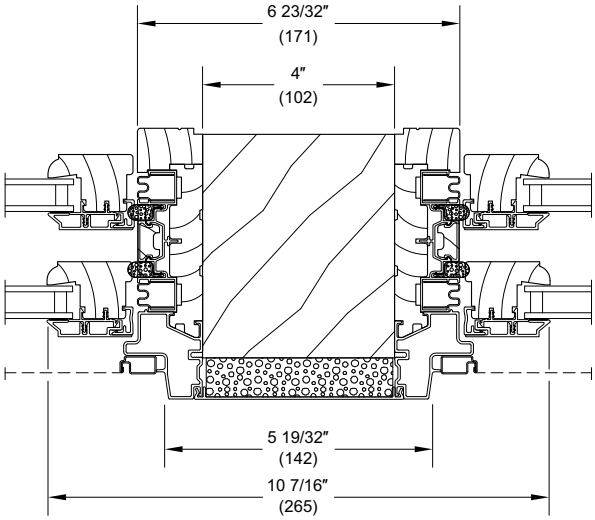

4" Space Mull