Clad Ultimate Casement and Push Out Casement Bow and Bay

Unit Features 1
Min and Max Sizing, Projection and Standard Heights for Bows and Bays 2
Standard Heights for Bows and Bays 3
Measurement Conversions: CUCABB and CUPCABB 4
Bow Rough Opening and Projection - 3 Wide, 4 Wide, 5 Wide, 6 Wide 5
Section Details: Bow 6
Standard Width Call Number: CUCABB and CUPCABB-30° Bay 7
Construction Details / Rough Opening and Projection Calculations: 30° Bay 8
Standard Width Call Number: CUCABB and CUPCABB-45° Bay 9
Construction Details / Rough Opening and Projection Calculations: 45° Bay 10
Construction Details / Rough Opening and Projection Calculations: 90° Bay 11

Unit Features

Clad Ultimate Casement / Awning Bow and Bay - CUCABB

Clad Ultimate Push Out Casement / Awning Bow and Bay - CUPCABB

- 6 degree angle on Bows
- Laminated Pine wood or optional Douglas fir head and seat boards installed
- Installation brackets are available in lieu of nailing fin
- Optional retro fit bay square jamb return for CUCABB and CUPCABB

Information concerning Daylight Opening, Egress Opening, and Vent Opening will be determined based on the individual components of the Bow or Bay

Bay standard operation as viewed from exterior.

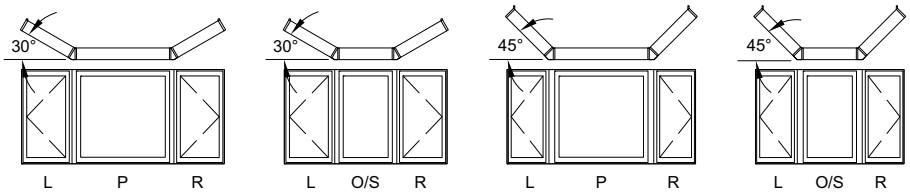

Bow standard operation as viewed from exterior.

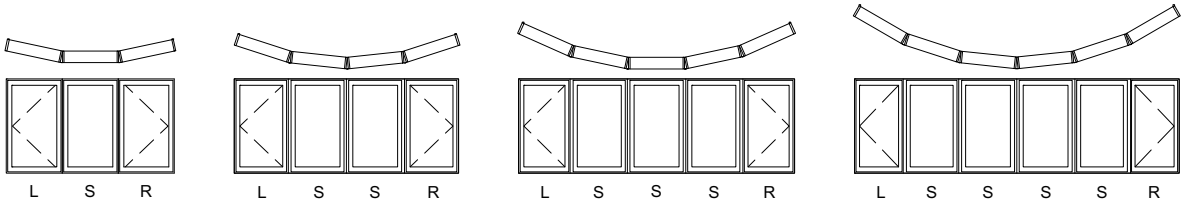

NOTE: Also see Clad Ultimate Casement Collection for more unit features.

NOTE: Use of clad casing will change the Rough Opening and Projection. Contract your Marvin representative for further information.

Min and Max Sizing, Projection and Standard Heights for Bows and Bays

Configuration	Minimum and Maximum Rough Opening Guidelines									
	Width			Height		Width			Height	
	in	mm	×	in	mm	in	mm	×	in	mm
Bow - 3 Wide	49 9/16	(1259)	×	25	(635)	108 11/16	(2761)	×	73	(1854)
Bow - 4 Wide	65 7/16	(1662)	×	25	(635)	143 9/32	(3639)	×	73	(1854)
Bow - 5 Wide	80 5/8	(2048)	×	25	(635)	157 5/32	(3992)	×	73	(1854)
Bow - 6 Wide	94 29/32	(2411)	×	25	(635)	162 3/8	(4124)	×	73	(1854)
Bay - 30°	48 21/32	(1236)	×	25	(635)	139 5/16	(3539)	×	73	(1854)
Bay - 45°	45 11/32	(1152)	×	25	(635)	129 5/8	(3292)	×	73	(1854)
Bay - 90°	17 5/8	(448)	×	25	(635)	73 5/8	(1870)	×	73	(1854)

Configuration	Projection Depth			
	Minimum		Maximum	
	in	mm	in	mm
Bow - 3 Wide	3 13/32	(87)	7 9/16	(192)
Bow - 4 Wide	6 7/8	(175)	15 1/8	(384)
Bow - 5 Wide	10 1/4	(260)	20 1/16	(510)
Bow - 6 Wide	15 1/4	(387)	26 7/32	(666)
Bay - 30°	8 5/8	(219)	18 5/8	(473)
Bay - 45°	12 21/32	(321)	26 13/16	(681)
Bay - 90°	22 1/16	(560)	42 1/16	(1068)

Standard Heights for Bows and Bays

Call Number Height	RO Height (w/ head & seat boards)		Frame Size Height (w/ head & seat boards)	
	ft-in	mm	ft-in	mm
24	2-1	(635)	2-0 1/2	(622)
26	2-3	(686)	2-2 1/2	(673)
28	2-5	(737)	2-4 1/2	(724)
32	2-9	(838)	2-8 1/2	(826)
36	3-1	(940)	3-0 1/2	(927)
40	3-5	(1041)	3-4 1/2	(1029)
44	3-9	(1143)	3-8 1/2	(1130)
48	4-1	(1245)	4-0 1/2	(1232)
54	4-7	(1397)	4-6 1/2	(1384)
56	4-9	(1448)	4-8 1/2	(1435)
60	5-1	(1549)	5-0 1/2	(1537)
64	5-5	(1651)	5-4 1/2	(1638)
72	6-1	(1854)	6-0 1/2	(1842)

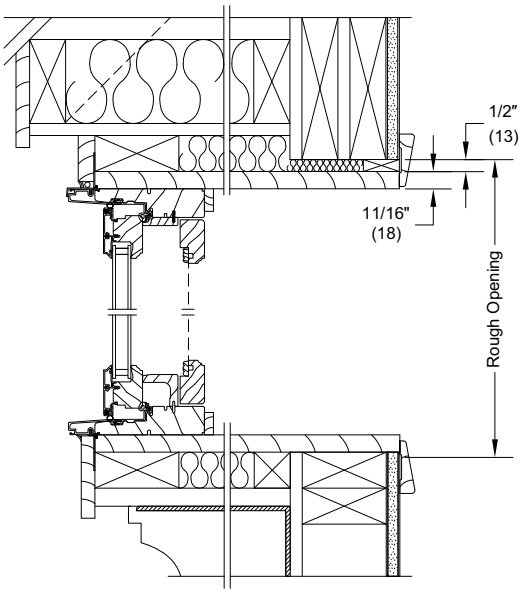

NOTE: Use of clad casing will change the Rough Opening and Projection. Contact your Marvin representative for further information.

Measurement Conversions: CUCABB and CUPCABB

Unit Measurements		Width		Height	
From	To				
Rough Opening - 30° Bay		**in**	**mm**	**in**	**mm**
Masonry Opening with BMC	Rough Opening (w/ head and seat boards)	-3 25/32	(96)	-1/4	(06)
Masonry Opening w/out BMC	Rough Opening (w/ head and seat boards)	-1 7/32	(31)	+ 3/8	(10)
Rough Opening - 45° Bay		**in**	**mm**	**in**	**mm**
Masonry Opening with BMC	Rough Opening (w/ head and seat boards)	-4 31/32	(126)	-1/4	(06)
Masonry Opening w/out BMC	Rough Opening (w/ head and seat boards)	-1 13/16	(46)	+ 3/8	(10)
Rough Opening - 90° Bay		**in**	**mm**	**in**	**mm**
Masonry Opening with BMC	Rough Opening (w/ head and seat boards)	-10 3/16	(259)	-1/4	(06)
Masonry Opening w/out BMC	Rough Opening (w/ head and seat boards)	-10 3/16	(259)	+ 3/8	(10)
Rough Opening - 3W Bow		**in**	**mm**	**in**	**mm**
Masonry Opening with BMC	Rough Opening (w/ head and seat boards)	-2 23/32	(69)	-1/4	(06)
Masonry Opening w/out BMC	Rough Opening (w/ head and seat boards)	-19/32	(15)	+ 1/4	(06)
Rough Opening - 4W Bow		**in**	**mm**	**in**	**mm**
Masonry Opening with BMC	Rough Opening (w/ head and seat boards)	-3 1/32	(77)	-1/4	(06)
Masonry Opening w/out BMC	Rough Opening (w/ head and seat boards)	-13/16	(21)	+ 1/4	(06)
Rough Opening - 5W Bow		**in**	**mm**	**in**	**mm**
Masonry Opening with BMC	Rough Opening (w/ head and seat boards)	-3 13/32	(87)	-1/4	(06)
Masonry Opening w/out BMC	Rough Opening (w/ head and seat boards)	-1	(25)	+ 1/4	(06)
Rough Opening - 6W Bow		**in**	**mm**	**in**	**mm**
Masonry Opening with BMC	Rough Opening (w/ head and seat boards)	-3 25/32	(96)	-1/4	(06)
Masonry Opening w/out BMC	Rough Opening (w/ head and seat boards)	-1 7/32	(31)	+ 1/4	(06)

NOTE: If no head board, Deduct 11/16" (17) from Rough Opening Height

NOTE: If no seat board, Deduct 11/16" (17) from Rough Opening Height

NOTE: Clad BMC or Flat Casing will change Rough Opening and Projection. Contact your Marvin representative.

Bow Rough Opening and Projection - 3 Wide, 4 Wide, 5 Wide, 6 Wide

Call Number (Width)	Number Wide	Bow			
		RO		Projection	
16	3	4-1 9/16	(1259)	0-3 7/16	(87)
16	4	5-5 7/16	(1663)	0-6 7/8	(174)
16	5	6-8 5/8	(2048)	0-10 7/32	(260)
16	6	7-10 29/32	(2411)	1-3 1/4	(387)
18	3	4-7 1/2	(1409)	0-3 27/32	(98)
18	4	6-1 1/4	(1860)	0-7 11/16	(195)
18	5	7-6 3/16	(2291)	0-11 15/32	(291)
18	6	8-10 5/32	(2696)	1-5 3/32	(434)
20	3	5-1 13/32	(1560)	0-4 1/4	(108)
20	4	6-9 1/32	(2058)	0-8 17/32	(216)
20	5	8-3 3/4	(2534)	1-0 11/16	(322)
20	6	9-9 13/32	(2982)	1-6 29/32	(480)
24	3	6-1 7/32	(1860)	0-5 3/32	(129)
24	4	8-0 19/32	(2453)	0-10 3/16	(258)
24	5	9-10 7/8	(3020)	1-3 5/32	(385)
24	6	11-7 29/32	(3553)	1-10 9/16	(573)
26	3	6-7 1/8	(2010)	0-5 1/2	(140)
26	4	8-8 3/8	(2651)	0-11	(279)
26	5	10-8 15/32	(3263)	1-4 3/8	(416)
26	6	12-7 5/32	(3839)	2-0 3/8	(619)
28	3	7-1 1/16	(2160)	0-5 29/32	(150)
28	4	9-4 5/32	(2849)	0-11 13/16	(300)
28	5	11-6 1/32	(3506)	1-5 19/32	(447)
28	6	13-6 3/8	(4125)	2-2 7/32	(666)
30	3	7-6 31/32	(2310)	0-6 11/32	(161)
30	4	9-11 15/16	(3046)	1-0 21/32	(321)
30	5	12-3 19/32	(3749)	1-6 27/32	(478)
32	3	8-0 7/8	(2461)	0-6 3/4	(172)
32	4	10-7 23/32	(3244)	1-1 15/32	(342)
32	5	13-1 5/32	(3992)	1-8 1/16	(510)
36	3	9-0 11/16	(2761)	0-7 19/32	(193)
36	4	11-11 9/32	(3639)	1-3 1/8	(384)

NOTE: Clad BMC or Flat Casing will change Rough Opening and Projection. Contact your Marvin representative.

Section Details: Bow

Scale: Not to Scale

Casement - Bow

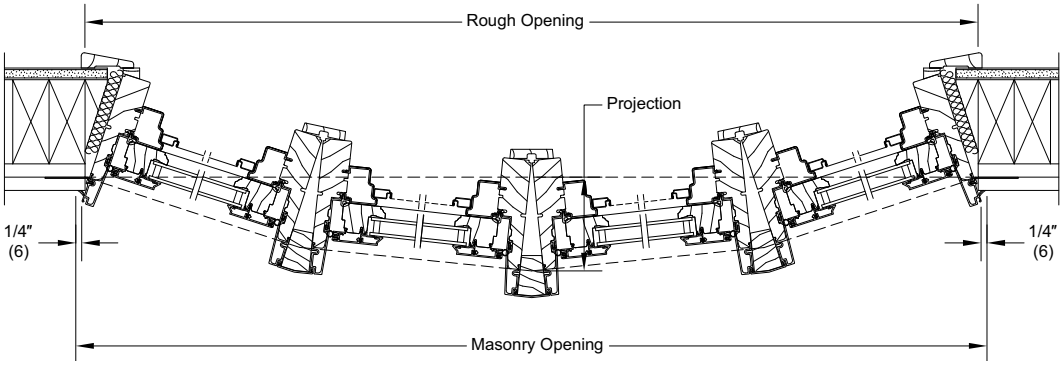

Push Out Casement - Bow

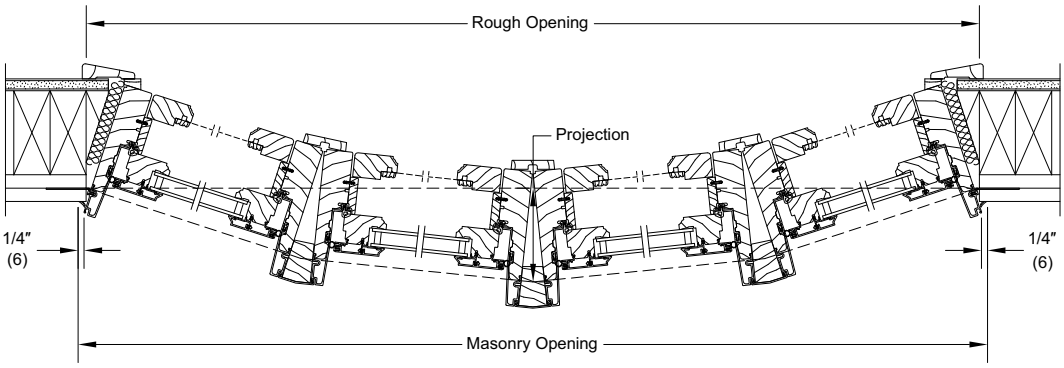

NOTE: Use of clad casing will change the Rough Opening and Projection. Contact your Marvin representative for further information.

Standard Width Call Number: CUCABB and CUPCABB-30° Bay

Call Number (Width)			30° Bay			
Side	Center	Side	RO		Projection	
16	16	16	4-0 21/32	(1236)	0-8 5/8	(219)
16	18	16	4-2 21/32	(1287)	0-8 5/8	(219)
16	20	16	4-4 21/32	(1337)	0-8 5/8	(219)
16	24	16	4-8 21/32	(1439)	0-8 5/8	(219)
16	26	16	4-10 21/32	(1490)	0-8 5/8	(219)
16	28	16	5-0 21/32	(1541)	0-8 5/8	(219)
16	30	16	5-2 21/32	(1591)	0-8 5/8	(219)
16	32	16	5-4 21/32	(1642)	0-8 5/8	(219)
16	36	16	5-8 21/32	(1744)	0-8 5/8	(219)
16	40	16	6-0 21/32	(1845)	0-8 5/8	(219)
16	48	16	6-8 21/32	(2049)	0-8 5/8	(219)
16	56	16	7-4 21/32	(2252)	0-8 5/8	(219)
16	60	16	7-8 21/32	(2353)	0-8 5/8	(219)
16	64	16	8-0 21/32	(2455)	0-8 5/8	(219)
16	72	16	8-8 21/32	(2658)	0-8 5/8	(219)
18	18	18	4-6 1/8	(1375)	0-9 5/8	(244)
18	20	18	4-8 1/8	(1425)	0-9 5/8	(244)
18	24	18	5-0 1/8	(1527)	0-9 5/8	(244)
18	26	18	5-2 1/8	(1578)	0-9 5/8	(244)
18	28	18	5-4 1/8	(1629)	0-9 5/8	(244)
18	30	18	5-6 1/8	(1679)	0-9 5/8	(244)
18	32	18	5-8 1/8	(1730)	0-9 5/8	(244)
18	36	18	6-0 1/8	(1832)	0-9 5/8	(244)
18	40	18	6-4 1/8	(1933)	0-9 5/8	(244)
18	48	18	7-0 1/8	(2137)	0-9 5/8	(244)
18	56	18	7-8 1/8	(2340)	0-9 5/8	(244)
18	60	18	8-0 1/8	(2441)	0-9 5/8	(244)
18	64	18	8-4 1/8	(2543)	0-9 5/8	(244)
18	72	18	9-0 1/8	(2746)	0-9 5/8	(244)
20	20	20	4-11 19/32	(1513)	0-10 5/8	(270)
20	24	20	5-3 19/32	(1615)	0-10 5/8	(270)
20	26	20	5-5 19/32	(1666)	0-10 5/8	(270)
20	28	20	5-7 19/32	(1716)	0-10 5/8	(270)
20	30	20	5-9 19/32	(1767)	0-10 5/8	(270)
20	32	20	5-11 19/32	(1818)	0-10 5/8	(270)
20	36	20	6-3 19/32	(1920)	0-10 5/8	(270)
20	40	20	6-7 19/32	(2021)	0-10 5/8	(270)
20	48	20	7-3 19/32	(2224)	0-10 5/8	(270)
20	56	20	7-11 19/32	(2428)	0-10 5/8	(270)
20	60	20	8-3 19/32	(2529)	0-10 5/8	(270)
20	64	20	8-7 19/32	(2631)	0-10 5/8	(270)
20	72	20	9-3 19/32	(2834)	0-10 5/8	(270)
24	24	24	5-10 1/2	(1791)	1-0 5/8	(320)
24	26	24	6-0 1/2	(1842)	1-0 5/8	(320)
24	28	24	6-2 1/2	(1892)	1-0 5/8	(320)
24	30	24	6-4 1/2	(1943)	1-0 5/8	(320)
24	32	24	6-6 1/2	(1994)	1-0 5/8	(320)
24	36	24	6-10 1/2	(2096)	1-0 5/8	(320)
24	40	24	7-2 1/2	(2197)	1-0 5/8	(320)
24	48	24	7-10 1/2	(2400)	1-0 5/8	(320)
24	56	24	8-6 1/2	(2604)	1-0 5/8	(320)
24	60	24	8-10 1/2	(2705)	1-0 5/8	(320)
24	64	24	9-2 1/2	(2807)	1-0 5/8	(320)
24	72	24	9-10 1/2	(3010)	1-0 5/8	(320)

Call Number (Width)			30° Bay			
Side	Center	Side	RO		Projection	
26	26	26	6-3 31/32	(1930)	1-1 5/8	(346)
26	28	26	6-5 31/32	(1980)	1-1 5/8	(346)
26	30	26	6-7 31/32	(2031)	1-1 5/8	(346)
26	32	26	6-9 31/32	(2082)	1-1 5/8	(346)
26	36	26	7-1 31/32	(2184)	1-1 5/8	(346)
26	40	26	7-5 31/32	(2285)	1-1 5/8	(346)
26	48	26	8-1 31/32	(2488)	1-1 5/8	(346)
26	56	26	8-9 31/32	(2692)	1-1 5/8	(346)
26	60	26	9-1 31/32	(2793)	1-1 5/8	(346)
26	64	26	9-5 31/32	(2895)	1-1 5/8	(346)
26	72	26	10-1 31/32	(3098)	1-1 5/8	(346)
28	28	28	6-9 7/16	(2068)	1-2 5/8	(371)
28	30	28	6-11 7/16	(2119)	1-2 5/8	(371)
28	32	28	7-1 7/16	(2170)	1-2 5/8	(371)
28	36	28	7-5 7/16	(2272)	1-2 5/8	(371)
28	40	28	7-9 7/16	(2373)	1-2 5/8	(371)
28	48	28	8-5 7/16	(2576)	1-2 5/8	(371)
28	56	28	9-1 7/16	(2780)	1-2 5/8	(371)
28	60	28	9-5 7/16	(2881)	1-2 5/8	(371)
28	64	28	9-9 7/16	(2983)	1-2 5/8	(371)
28	72	28	10-5 7/16	(3186)	1-2 5/8	(371)
30	30	30	7-2 29/32	(2207)	1-3 5/8	(397)
30	32	30	7-4 29/32	(2258)	1-3 5/8	(397)
30	36	30	7-8 29/32	(2360)	1-3 5/8	(397)
30	40	30	8-0 29/32	(2461)	1-3 5/8	(397)
30	48	30	8-8 29/32	(2664)	1-3 5/8	(397)
30	56	30	9-4 29/32	(2868)	1-3 5/8	(397)
30	60	30	9-8 29/32	(2969)	1-3 5/8	(397)
30	64	30	10-0 29/32	(3071)	1-3 5/8	(397)
30	72	30	10-8 29/32	(3274)	1-3 5/8	(397)
32	32	32	7-8 3/8	(2346)	1-4 5/8	(422)
32	36	32	8-0 3/8	(2448)	1-4 5/8	(422)
32	40	32	8-4 3/8	(2549)	1-4 5/8	(422)
32	48	32	9-0 3/8	(2752)	1-4 5/8	(422)
32	56	32	9-8 3/8	(2956)	1-4 5/8	(422)
32	60	32	10-0 3/8	(3057)	1-4 5/8	(422)
32	64	32	10-4 3/8	(3159)	1-4 5/8	(422)
32	72	32	11-0 3/8	(3362)	1-4 5/8	(422)
36	36	36	8-7 9/32	(2624)	1-6 5/8	(473)
36	40	36	8-11 9/32	(2725)	1-6 5/8	(473)
36	48	36	9-7 9/32	(2928)	1-6 5/8	(473)
36	56	36	10-3 9/32	(3132)	1-6 5/8	(473)
36	60	36	10-7 9/32	(3233)	1-6 5/8	(473)
36	64	36	10-11 9/32	(3335)	1-6 5/8	(473)
36	72	36	11-7 9/32	(3538)	1-6 5/8	(473)

NOTE: Clad BMC or Flat Casing will change Rough Opening and Projection. Contact your Marvin representative.

Construction Details / Rough Opening and Projection Calculations: 30° Bay

Scale: Not to Scale

30-Degree Bay - Clad Ultimate Casement

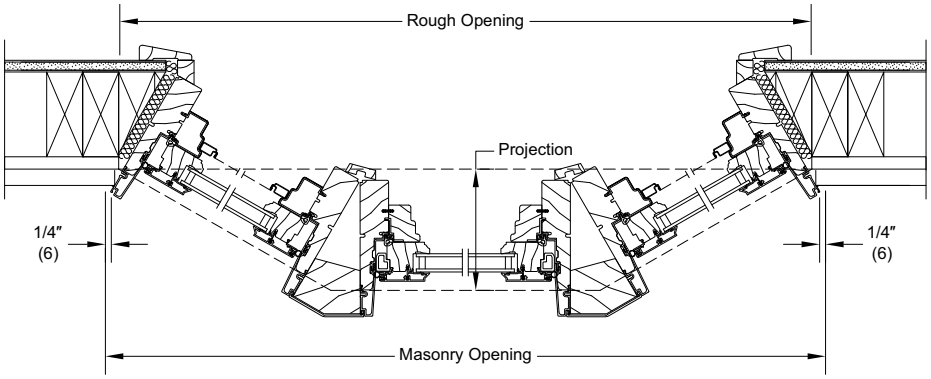

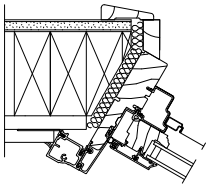

Optional retro fit bay square jamb return for CUCABB.

30-Degree Bay - Clad Ultimate Push Out Casement

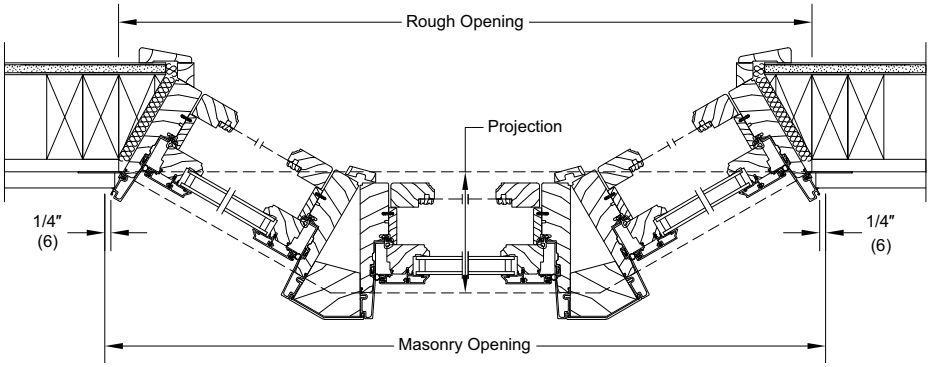

Clad Ultimate Casement Bay **Clad Ultimate Push Out Casement Bay**	
30-Degree (no casing)	
Projection	OM **width** of flanker unit PLUS 1.223 x 0.5
Rough Opening Width	(Projection x 1.732) x 2 PLUS 2.82 PLUS OM **width** of Center Unit
Masonry Opening Unit	Add 1 7/32" (31) to Rough Opening **width**
Rough Opening Height (with Head and Seat boards)	OM height on center unit(s) PLUS 1" (25)
Masonry Opening Height (with Head and Seat boards)	Rough Opening height MINUS 1/4" (6)

NOTE: If no head board, Deduct 11/16" (17) from Rough Opening Height

NOTE: If no seat board, Deduct 11/16" (17) from Rough Opening Height

NOTE: Clad BMC or Flat Casing will change Rough Opening and Projection. Contact your Marvin representative.

Standard Width Call Number: CUCABB and CUPCABB-45° Bay

Call Number (Width)			45° Bay			
Side	Center	Side	RO		Projection	
16	16	16	3-9 5/16	(1151)	1-0 21/32	(321)
16	18	16	3-11 5/16	(1202)	1-0 21/32	(321)
16	20	16	4-1 5/16	(1253)	1-0 21/32	(321)
16	24	16	4-5 5/16	(1355)	1-0 21/32	(321)
16	26	16	4-7 5/16	(1405)	1-0 21/32	(321)
16	28	16	4-9 5/16	(1456)	1-0 21/32	(321)
16	30	16	4-11 5/16	(1507)	1-0 21/32	(321)
16	32	16	5-1 5/16	(1558)	1-0 21/32	(321)
16	36	16	5-5 5/16	(1659)	1-0 21/32	(321)
16	40	16	5-9 5/16	(1761)	1-0 21/32	(321)
16	48	16	6-5 5/16	(1964)	1-0 21/32	(321)
16	56	16	7-1 5/16	(2167)	1-0 21/32	(321)
16	60	16	7-5 5/16	(2269)	1-0 21/32	(321)
16	64	16	7-9 5/16	(2371)	1-0 21/32	(321)
16	72	16	8-5 5/16	(2574)	1-0 21/32	(321)
18	18	18	4-2 5/32	(1274)	1-2 1/16	(357)
18	20	18	4-4 5/32	(1325)	1-2 1/16	(357)
18	24	18	4-8 5/32	(1426)	1-2 1/16	(357)
18	26	18	4-10 5/32	(1477)	1-2 1/16	(357)
18	28	18	5-0 5/32	(1528)	1-2 1/16	(357)
18	30	18	5-2 5/32	(1579)	1-2 1/16	(357)
18	32	18	5-4 5/32	(1630)	1-2 1/16	(357)
18	36	18	5-8 5/32	(1731)	1-2 1/16	(357)
18	40	18	6-0 5/32	(1833)	1-2 1/16	(357)
18	48	18	6-8 5/32	(2036)	1-2 1/16	(357)
18	56	18	7-4 5/32	(2239)	1-2 1/16	(357)
18	60	18	7-8 5/32	(2341)	1-2 1/16	(357)
18	64	18	8-0 5/32	(2442)	1-2 1/16	(357)
18	72	18	8-8 5/32	(2646)	1-2 1/16	(357)
20	20	20	4-6 31/32	(1397)	1-3 15/32	(393)
20	24	20	4-10 31/32	(1498)	1-3 15/32	(393)
20	26	20	5-0 31/32	(1549)	1-3 15/32	(393)
20	28	20	5-2 31/32	(1600)	1-3 15/32	(393)
20	30	20	5-4 31/32	(1651)	1-3 15/32	(393)
20	32	20	5-6 31/32	(1701)	1-3 15/32	(393)
20	36	20	5-10 31/32	(1803)	1-3 15/32	(393)
20	40	20	6-2 31/32	(1905)	1-3 15/32	(393)
20	48	20	6-10 31/32	(2108)	1-3 15/32	(393)
20	56	20	7-6 31/32	(2311)	1-3 15/32	(393)
20	60	20	7-10 31/32	(2413)	1-3 15/32	(393)
20	64	20	8-2 31/32	(2514)	1-3 15/32	(393)
20	72	20	8-10 31/32	(2717)	1-3 15/32	(393)
24	24	24	5-4 5/8	(1642)	1-6 5/16	(465)
24	26	24	5-6 5/8	(1693)	1-6 5/16	(465)
24	28	24	5-8 5/8	(1743)	1-6 5/16	(465)
24	30	24	5-10 5/8	(1794)	1-6 5/16	(465)
24	32	24	6-0 5/8	(1845)	1-6 5/16	(465)
24	36	24	6-4 5/8	(1947)	1-6 5/16	(465)
24	40	24	6-8 5/8	(2048)	1-6 5/16	(465)
24	48	24	7-4 5/8	(2251)	1-6 5/16	(465)
24	56	24	8-0 5/8	(2455)	1-6 5/16	(465)
24	60	24	8-4 5/8	(2556)	1-6 5/16	(465)
24	64	24	8-8 5/8	(2658)	1-6 5/16	(465)
24	72	24	9-4 5/8	(2861)	1-6 5/16	(465)

Call Number (Width)			45° Bay			
Side	Center	Side	RO		Projection	
26	26	26	5-9 15/32	(1764)	1-7 23/32	(501)
26	28	26	5-11 15/32	(1815)	1-7 23/32	(501)
26	30	26	6-1 15/32	(1866)	1-7 23/32	(501)
26	32	26	6-3 15/32	(1917)	1-7 23/32	(501)
26	36	26	6-7 15/32	(2018)	1-7 23/32	(501)
26	40	26	6-11 15/32	(2120)	1-7 23/32	(501)
26	48	26	7-7 15/32	(2323)	1-7 23/32	(501)
26	56	26	8-3 15/32	(2526)	1-7 23/32	(501)
26	60	26	8-7 15/32	(2628)	1-7 23/32	(501)
26	64	26	8-11 15/32	(2730)	1-7 23/32	(501)
26	72	26	9-7 15/32	(2933)	1-7 23/32	(501)
28	28	28	6-2 9/32	(1887)	1-9 1/8	(537)
28	30	28	6-4 9/32	(1938)	1-9 1/8	(537)
28	32	28	6-6 9/32	(1989)	1-9 1/8	(537)
28	36	28	6-10 9/32	(2090)	1-9 1/8	(537)
28	40	28	7-2 9/32	(2192)	1-9 1/8	(537)
28	48	28	7-10 9/32	(2395)	1-9 1/8	(537)
28	56	28	8-6 9/32	(2598)	1-9 1/8	(537)
28	60	28	8-10 9/32	(2700)	1-9 1/8	(537)
28	64	28	9-2 9/32	(2802)	1-9 1/8	(537)
28	72	28	9-10 9/32	(3005)	1-9 1/8	(537)
30	30	30	6-7 1/8	(2010)	1-10 17/32	(573)
30	32	30	6-9 1/8	(2061)	1-10 17/32	(573)
30	36	30	7-1 1/8	(2162)	1-10 17/32	(573)
30	40	30	7-5 1/8	(2264)	1-10 17/32	(573)
30	48	30	8-1 1/8	(2467)	1-10 17/32	(573)
30	56	30	8-9 1/8	(2670)	1-10 17/32	(573)
30	60	30	9-1 1/8	(2772)	1-10 17/32	(573)
30	64	30	9-5 1/8	(2873)	1-10 17/32	(573)
30	72	30	10-1 1/8	(3077)	1-10 17/32	(573)
32	32	32	6-11 15/16	(2132)	1-11 31/32	(609)
32	36	32	7-3 15/16	(2234)	1-11 31/32	(609)
32	40	32	7-7 15/16	(2336)	1-11 31/32	(609)
32	48	32	8-3 15/16	(2539)	1-11 31/32	(609)
32	56	32	8-11 15/16	(2742)	1-11 31/32	(609)
32	60	32	9-3 15/16	(2844)	1-11 31/32	(609)
32	64	32	9-7 15/16	(2945)	1-11 31/32	(609)
32	72	32	10-3 15/16	(3148)	1-11 31/32	(609)
36	36	36	7-9 19/32	(2378)	2-2 25/32	(680)
36	40	36	8-1 19/32	(2479)	2-2 25/32	(680)
36	48	36	8-9 19/32	(2682)	2-2 25/32	(680)
36	56	36	9-5 19/32	(2886)	2-2 25/32	(680)
36	60	36	9-9 19/32	(2987)	2-2 25/32	(680)
36	64	36	10-1 19/32	(3089)	2-2 25/32	(680)
36	72	36	10-9 19/32	(3292)	2-2 25/32	(680)

NOTE: Clad BMC or Flat Casing will change Rough OPening and Projection. Contact your Marvin representative.

Construction Details / Rough Opening and Projection Calculations: 45° Bay

Scale: Not to Scale

45-Degree Bay - Clad Ultimate Casement

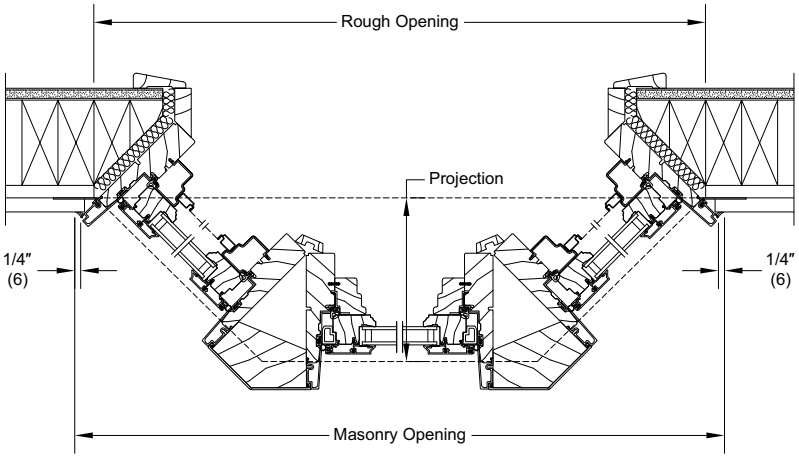

45-Degree Bay - Clad Ultimate Push Out Casement

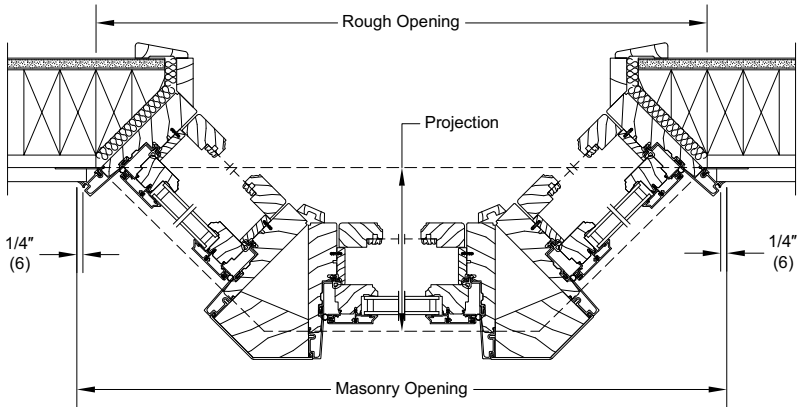

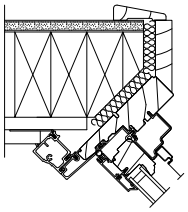

Optional retro fit bay square jamb return for CUPCA Bay.

Clad Ultimate Casement Bay Clad Ultimate Push Out Casement Bay	
45-Degree (no casing)	
Projection	OM **width** of flanker unit PLUS 1.89 x 0.707
Rough Opening Width	Projection x 2 Plus 4.03 Plus OM **width** of Center Unit
Masonry Opening Width	Add 1 13/16" (46) to Rough Opening **width**
Rough Opening Height (with Head and Seat Boards)	OM height on center unit(s) Plus 1 7/8" (48)
Masonry Opening Height (with Head and Seat Boards)	Rough Opening height Minus 1 /4" (6)

NOTE: If no head board, Deduct 11/16" (17) from Rough Opening Height

NOTE: If no seat board, Deduct 11/16" (17) from Rough Opening Height

NOTE: Clad BMC or Flat Casing will change Rough Opening and Projection. Contact your Marvin representative.

Construction Details / Rough Opening and Projection Calculations: 90° Bay

Scale: Not to Scale

90-Degree Bay - Clad Ultimate Casement

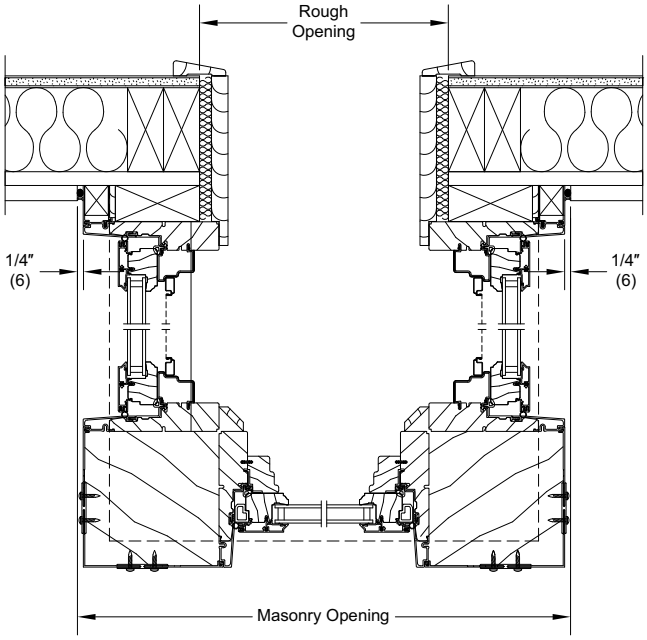

90-Degree Bay - Clad Ultimate Push Out Casement

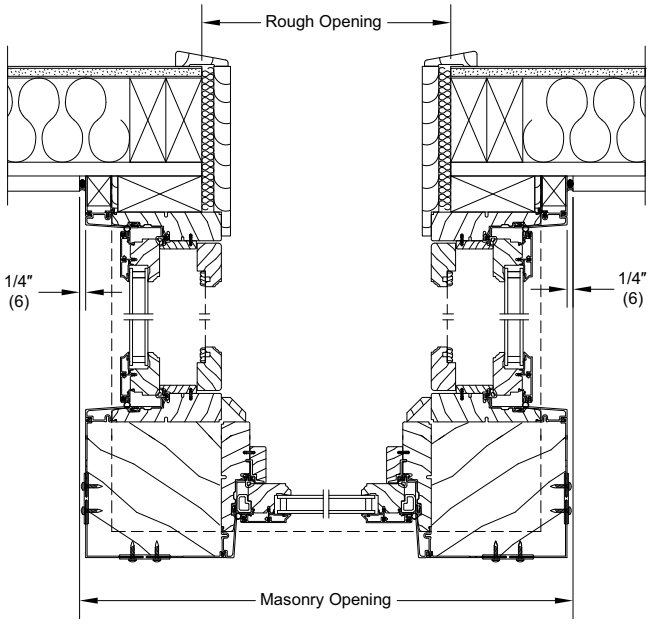

Clad Ultimate Casement Bay **Clad Ultimate Push Out Casement Bay**	
90-Degree (no casing)	
Projection	OM **width** of flanker unit PLUS 6 1/16" (154)
Rough Opening Width	OM **width** of Center Unit(s) PLUS 1 5/8" (41)
Masonry Opening Unit	Add 10 3/16" (259) to Rough Opening **width**
Rough Opening Height (with Head and Seat boards)	OM height on center unit(s) PLUS 1 7/8" (48)
Masonry Opening Height (with Head and Seat boards)	Rough Opening height MINUS 1/4" (6)

NOTE: If no head board, Deduct 11/16" (17) from Rough Opening Height

NOTE: If no seat board, Deduct 11/16" (17) from Rough Opening Height

NOTE: Clad BMC or Flat Casing will change Rough Opening and Projection. Contact your Marvin representative.