2 1/4" Clad Swinging French Doors

Standard Unit Measurements 1
Certified Sizes and Ratings Minimum and Maximum Guidelines / Measurement Conversions 2
Net Clear Openings 3
Inswing Section Details: Operating 4
Inswing Section Details: Stationary and Sidelite 5
Inswing Section Details: Casing Options 6
Inswing Section Details: Panel Configurations 7
Inswing Section Details: Ultimate Swinging Screen 8
Inswing Section Details: Flat Panel Placement 9
Inswing Section Details: Raised Panel Placement 10
Outswing Section Details: Operating 11
Outswing Section Details: Stationary and Sidelite 12
Outswing Section Details: Clad Casing Options 13
Outswing Section Details: Panel Configurations 14
Outswing Section Details: Flat Panel Placement 15
Outswing Section Details: Raised Panel Placement 16

Standard Unit Measurements

Standard Inswing and Outswing Unit Measurements													
Height													
Unit Type	**Call Number**	**Masonry Opening**		**Rough Opening**		**Frame Size**		**Panel OM**		**Daylight Opening**		**Glass Size**	
		ft - in	**mm**	**ft - in**	**mm**	**ft - in**	**mm**	**ft-in**	**mm**	**ft - in**	**mm**	**ft - in**	**mm**
All Configurations	8-0	7-11 3/4	(2432)	8-0	(2438)	7-11 1/2	(2426)	7-8 1/2	(2350)	6-6 3/8	(1991)	6-7 11/16	(2024)
	10-0	9-11 3/4	(3042)	10-0	(3048)	9-11 1/2	(3035)	9-8 1/2	(2959)	8-6 3/8	(2600)	8-7 11/16	(2634)
Width													
Unit Type	**Call Number**	**Masonry Opening**		**Rough Opening**		**Frame Size**		**Panel OM**		**Daylight Opening**		**Glass Size**	
		ft - in	**mm**	**ft - in**	**mm**	**ft - in**	**mm**	**ft-in**	**mm**	**ft - in**	**mm**	ft-in	mm
1 Panel	2-6	2-7 15/16	(811)	2-8 7/16	(824)	2-7 7/16	(799)	2-5 1/16	(738)	1-5 3/32	(434)	1-6 13/32	(468)
	2-8	2-9 15/16	(862)	2-10 7/16	(875)	2-9 7/16	(849)	2-7 1/16	(789)	1-7 3/32	(485)	1-8 13/32	(518)
	3-0	3-1 15/16	(964)	3-2 7/16	(976)	3-1 7/16	(951)	2-11 1/16	(891)	1-11 3/32	(587)	2-0 13/32	(620)
2 Panel	5-0	5-1 1/8	(1553)	5-1 5/8	(1565)	5-0 5/8	(1540)	2-5 1/16	(738)	1-5 3/32	(434)	1-6 13/32	(468)
	5-4	5-5 1/8	(1654)	5-5 5/8	(1667)	5-4 5/8	(1641)	2-7 1/16	(789)	1-7 3/32	(485)	1-8 13/32	(518)
	6-0	6-1 1/8	(1857)	6-1 5/8	(1870)	6-0 5/8	(1845)	2-11 1/16	(891)	1-11 3/32	(587)	2-0 13/32	(620)

Certified Sizes and Ratings Minimum and Maximum Guidelines / Measurement Conversions

Certified Sizes and Ratings - 2 1/4" Inswing French Door with Multi-Point and Adjustable Hinges					
Panel Height	**Number of Panels**	**2-6**	**2-8**	**3-0**	**3-0Stationary**
8-0	**1**	LC-PG55-SHD	LC-PG55-SHD	LC-PG55-SHD	LC-PG55-SHD
10-0	**1**	LC-PG55-SHD	LC-PG55-SHD	LC-PG55-SHD	LC-PG55-SHD
8-0	**2**	LC-PG55-SHD	LC-PG55-SHD	LC-PG55-SHD	LC-PG55-SHD
10-0	**2**	LC-PG55-SHD	LC-PG55-SHD	LC-PG55-SHD	LC-PG55-SHD

Certified Sizes and Ratings - 2 1/4" Outswing French Door with Multi-Point and Adjustable Hinges					
Panel Height	**Number of Panels**	**2-6**	**2-8**	**3-0**	**3-0Stationary**
8-0	**1**	LC-PG55-SHD	LC-PG55-SHD	LC-PG55-SHD	LC-PG55-SHD
10-0	**1**	LC-PG55-SHD	LC-PG55-SHD	LC-PG55-SHD	LC-PG55-SHD
8-0	**2**	LC-PG55-SHD	LC-PG55-SHD	LC-PG55-SHD	LC-PG55-SHD
10-0	**2**	LC-PG55-SHD	LC-PG55-SHD	LC-PG55-SHD	LC-PG55-SHD

Minimum and Maximum Guidelines										
Unit Type	**Frame Size**									
	Min Size Unit					**Max Size Unit**				
	in	**mm**	**×**	**in**	**mm**	**in**	**mm**	**×**	**in**	**mm**
1 - PanelOperator	19 1/16	(484)	×	70 5/16	(1786)	43 7/16	(1103)	×	119 1/2	(3035)
2 - PanelOperator	35 13/16	(910)	×	70 5/16	(1786)	84 5/8	(2149)	×	119 1/2	(3035)

Unit Measurements		**Width**				**Height**	
From	**To**						
Rough Opening		**in**	**mm**			**in**	**mm**
OM of Frame	Rough Opening	+ 1	(25)			+ 1/2	(13)
Masonary Opening	Rough Opening	+ 1/2	(13)			+ 1/4	(06)
Masonry Opening w/BMC	Rough Opening	-2 1/8	(54)			-1 1/16	(27)
Masonry Opening w/Flat Casing	Rough Opening	-5 1/2	(140)			-2 3/4	(70)
Operating Panel		**in**	**mm**			**in**	**mm**
OM of Frame	OM of Panel (x1)	-2 3/8	(60)			-3	(76)
OM of Frame	OM of Panel (x2)	-2 1/2	(64)	÷	2	-3	(76)
Daylight Opening	OM of Panel	+ 11 31/32	(304)			+ 14 3/32	(358)
Glass		**in**	**mm**			**in**	**mm**
Daylight Opening	Glass	+ 1 5/16	(33)			+ 1 5/16	(33)

Net Clear Openings

Scale: 1 1/2" = 1' 0"

Net Clear Opening 2 1/4" Inswing French Door			
Height			
Unit Type	**Call Number**	**Net Clear Openings**	
		ft - in	**mm**
All Configurations	8-0	7-7 23/32	(2329)
	10-0	9-7 23/32	(2939)
Width			
Unit Type	**Call Number**	**Net Clear Openings**	
		ft-in	**mm**
1 Panel Operator	2-6	2-1 15/32	(647)
	2-8	2-3 15/32	(698)
	3-0	2-7 15/32	(799)
2 Panel Operator	5-0	4-4 3/16	(1325)
	5-4	4-8 3/16	(1427)
	6-0	5-4 3/16	(1630)

Net Clear Opening 2 1/4" Outswing French Door			
Height			
Unit Type	**Call Number**	**Net Clear Openings**	
		ft - in	**mm**
All Configurations	8-0	7-8 1/8	(2340)
	10-0	9-8 1/8	(2950)
Width			
Unit Type	**Call Number**	**Net Clear Openings**	
		ft-in	**mm**
1 Panel Operator	2-6	2-1 15/32	(647)
	2-8	2-3 15/32	(698)
	3-0	2-7 15/32	(799)
2 Panel Operator	5-0	4-4 3/16	(1325)
	5-4	4-8 3/16	(1427)
	6-0	5-4 3/16	(1630)

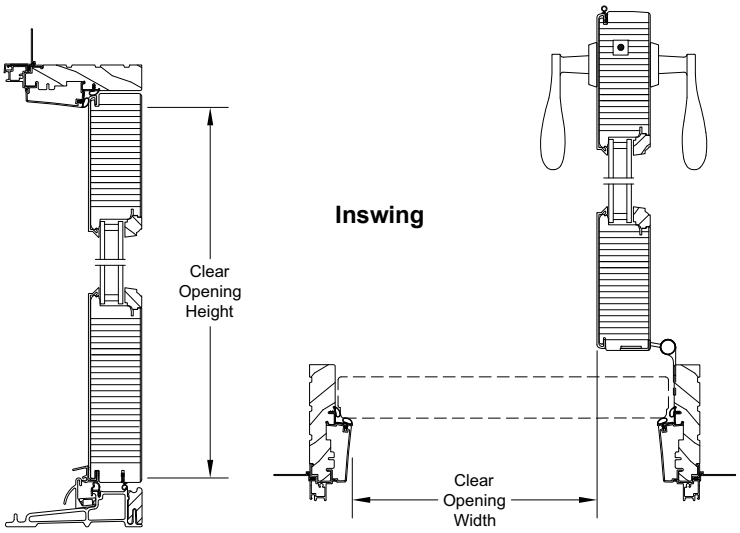

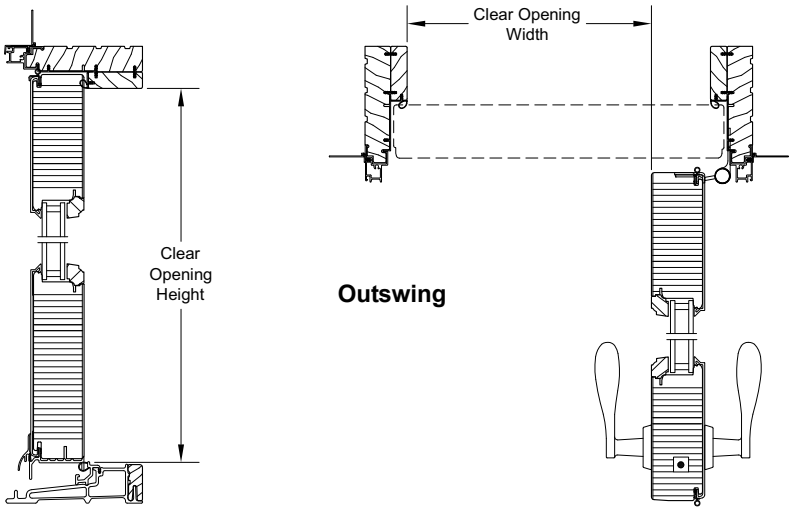

Inswing Section Details: Operating

Scale: 3" = 1' 0"

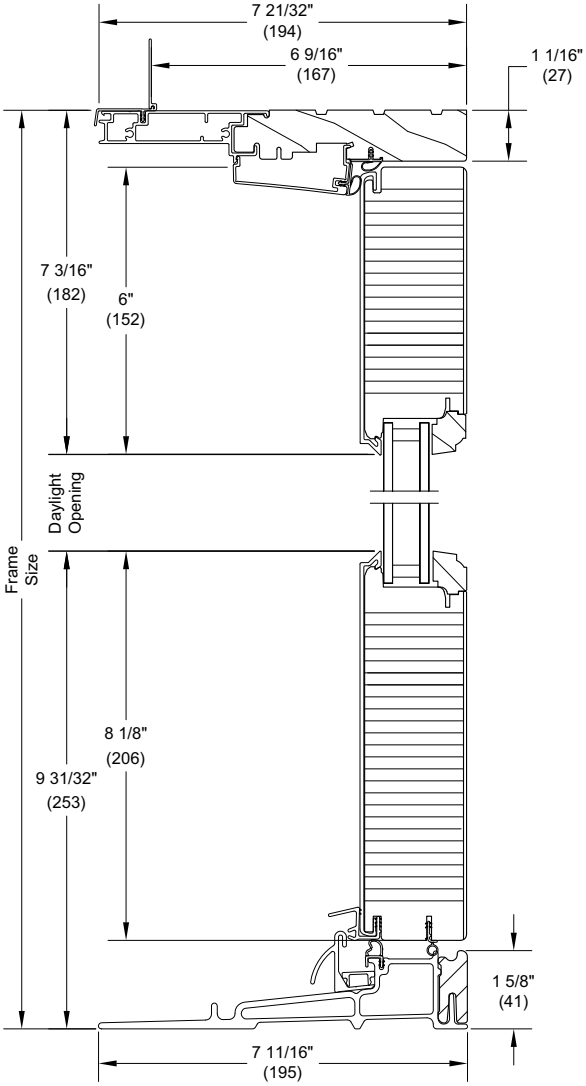

Head Jamb and Sill

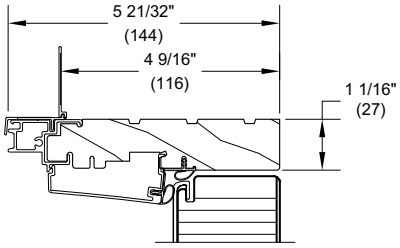

4 9/16" Head Jamb

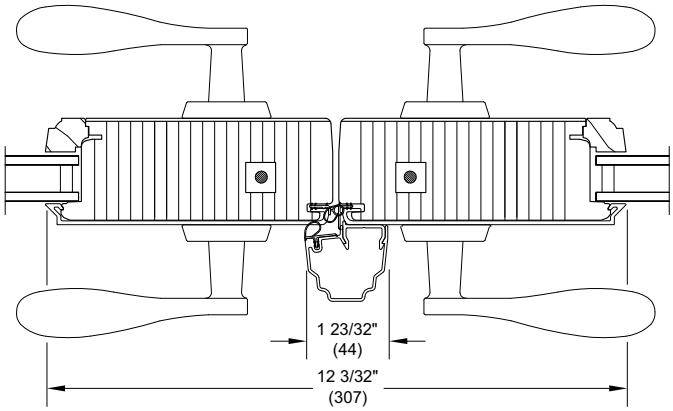

XX L Meeting Stiles

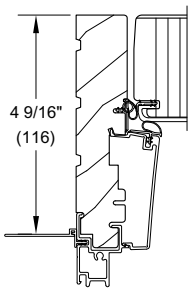

4 9/16" Jamb

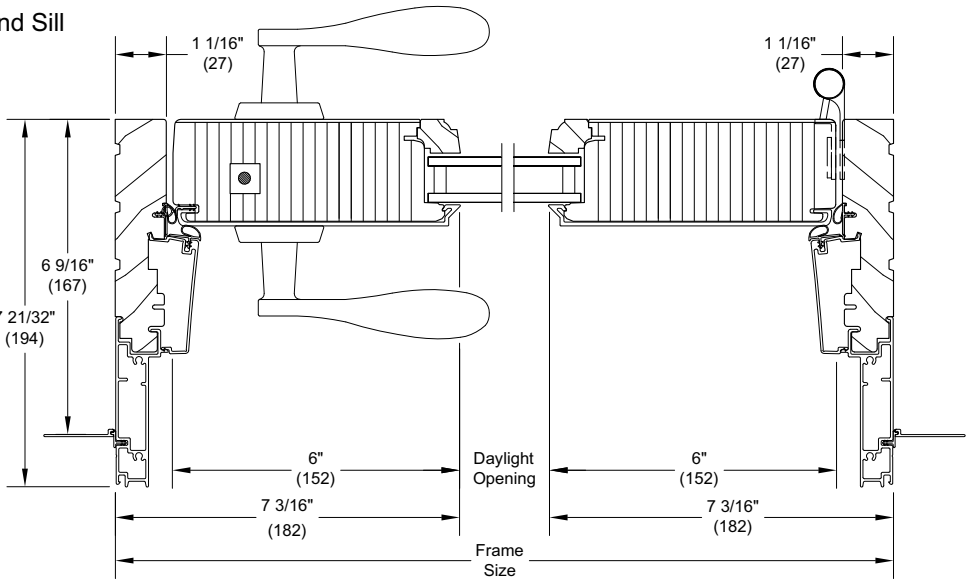

X R Jamb

Inswing Section Details: Stationary and Sidelite

Scale: 3" = 1' 0"

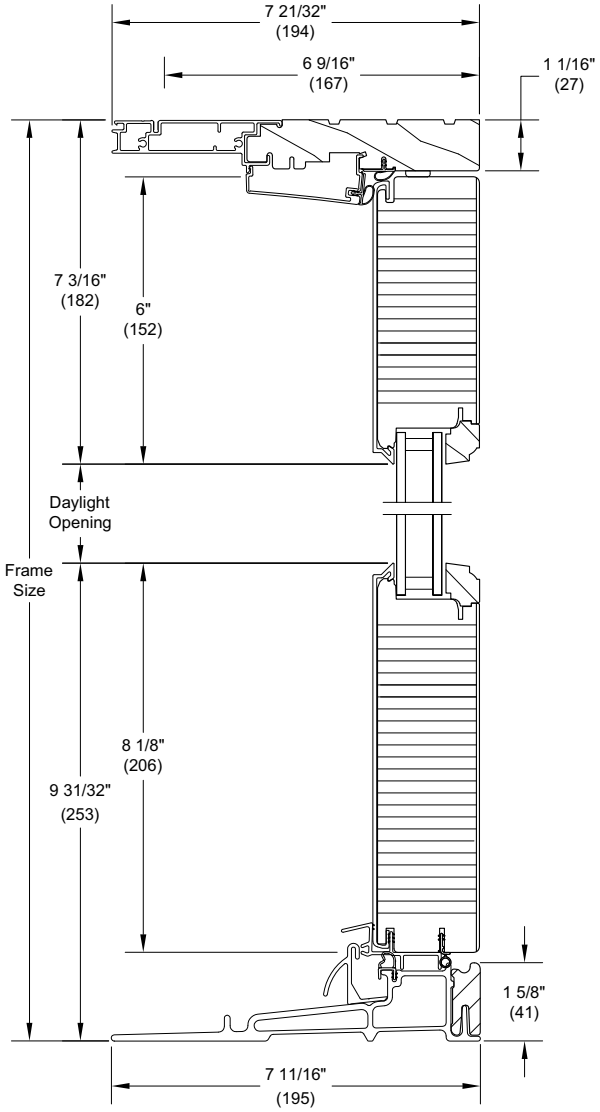

Head Jamb and Sill

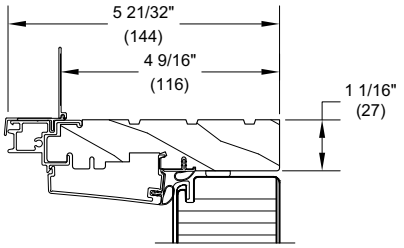

4 9/16" Head Jamb

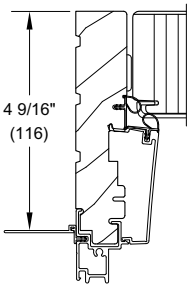

4 9/16" Jamb

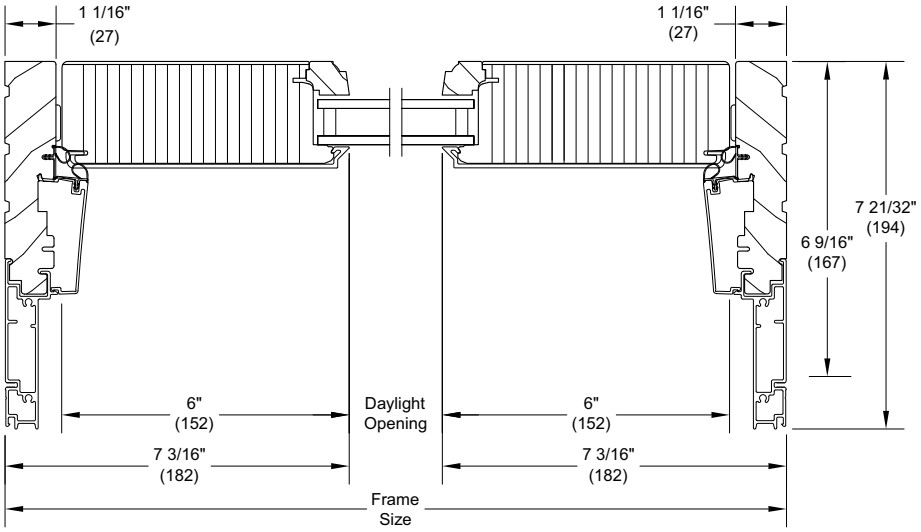

O - Jamb

Inswing Section Details: Casing Options

Scale: 3" = 1' 0"

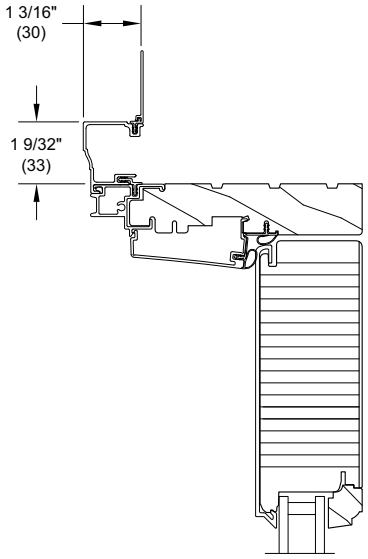

4 9/16" Head Jamb with
Clad Brick Mould Casing

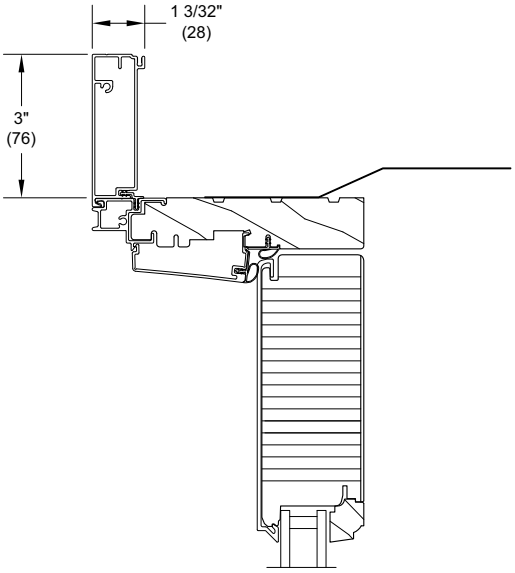

4 9/16" Head Jamb with
Clad Flat Casing

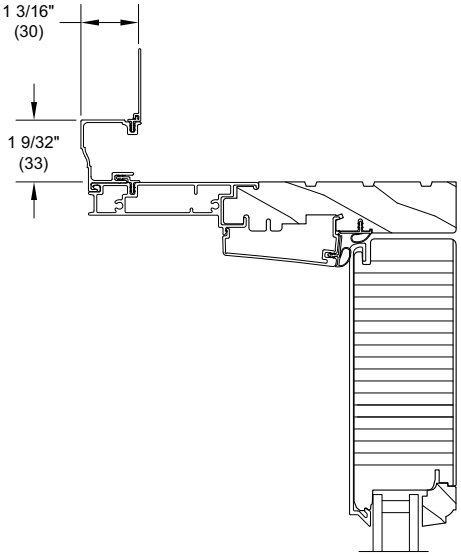

6 9/16" Head Jamb with
Clad Brick Mould Casing

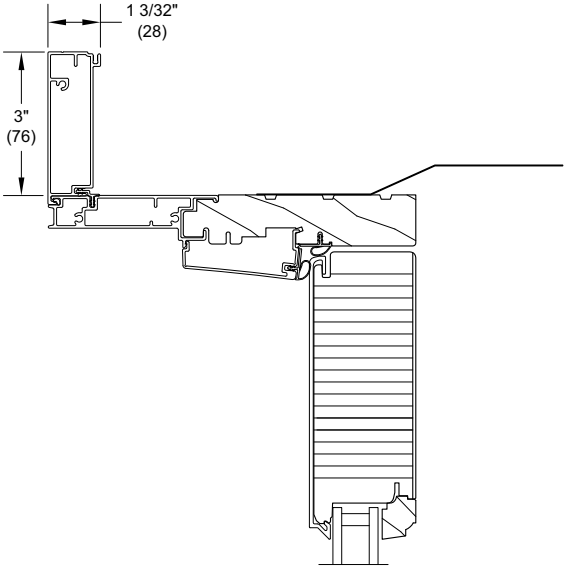

6 9/16" Head Jamb with
Clad Flat Casing

Inswing Section Details: Panel Configurations

Not to Scale

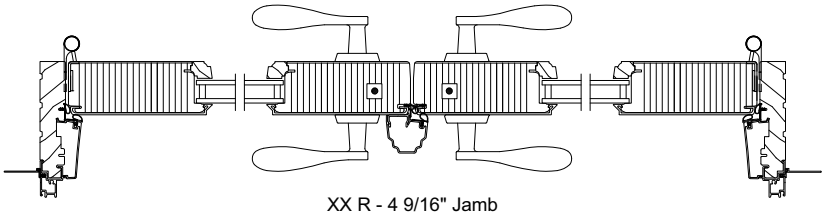

XX R - 4 9/16" Jamb

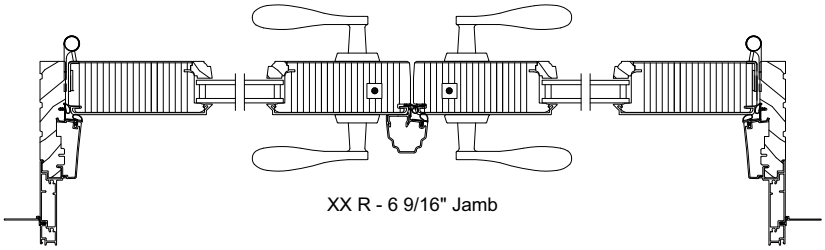

XX R - 6 9/16" Jamb

Inswing Section Details: Ultimate Swinging Screen

Not to Scale

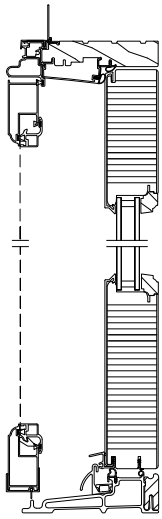

4 9/16" Head
Jamb and Sill

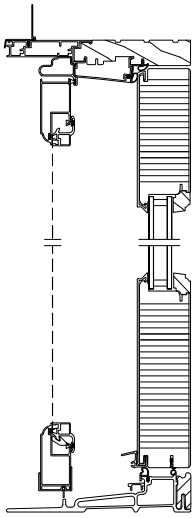

6 9/16" Head
Jamb and Sill

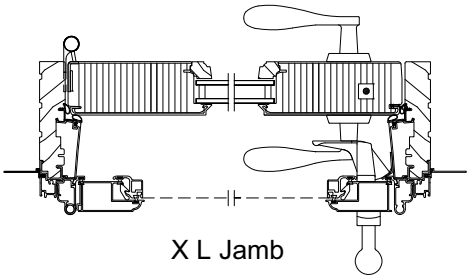

X L Jamb

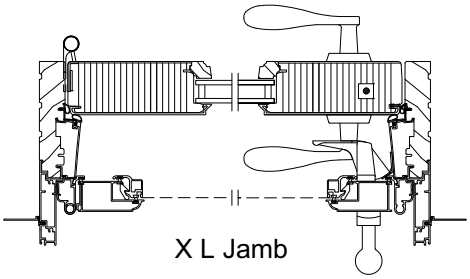

X L Jamb

Inswing Section Details: Flat Panel Placement

Scale: 3" = 1' 0"

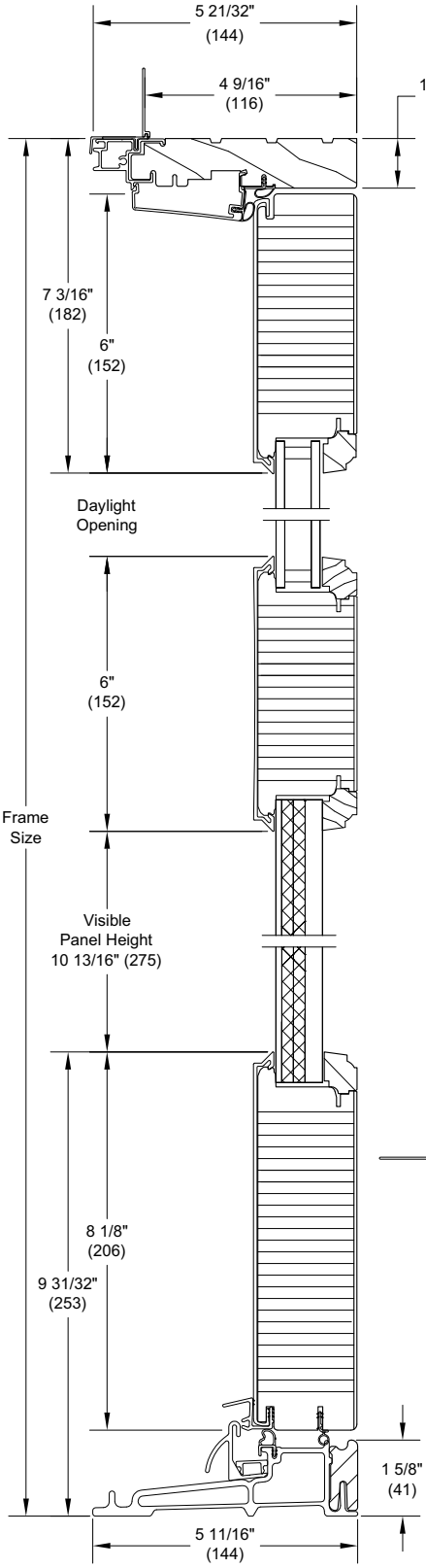

Head Jamb and Sill

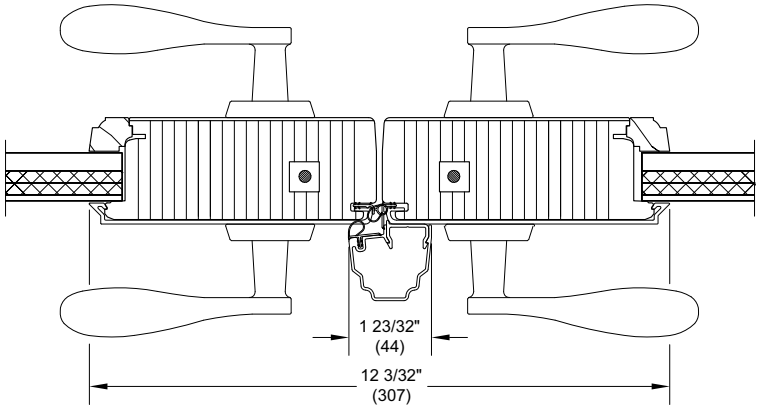

XX L Meeting Stiles

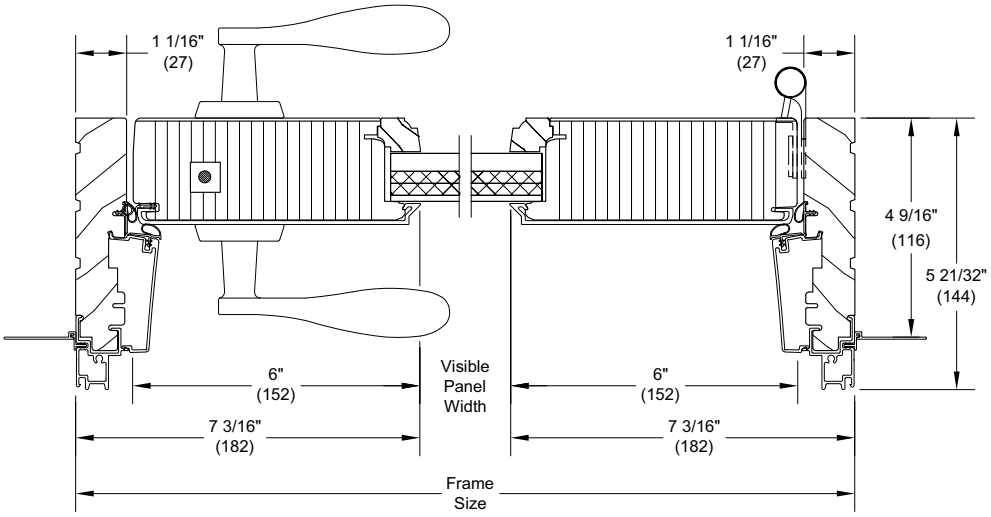

X R Jamb

Inswing Section Details: Raised Panel Placement

Scale: 3" = 1' 0"

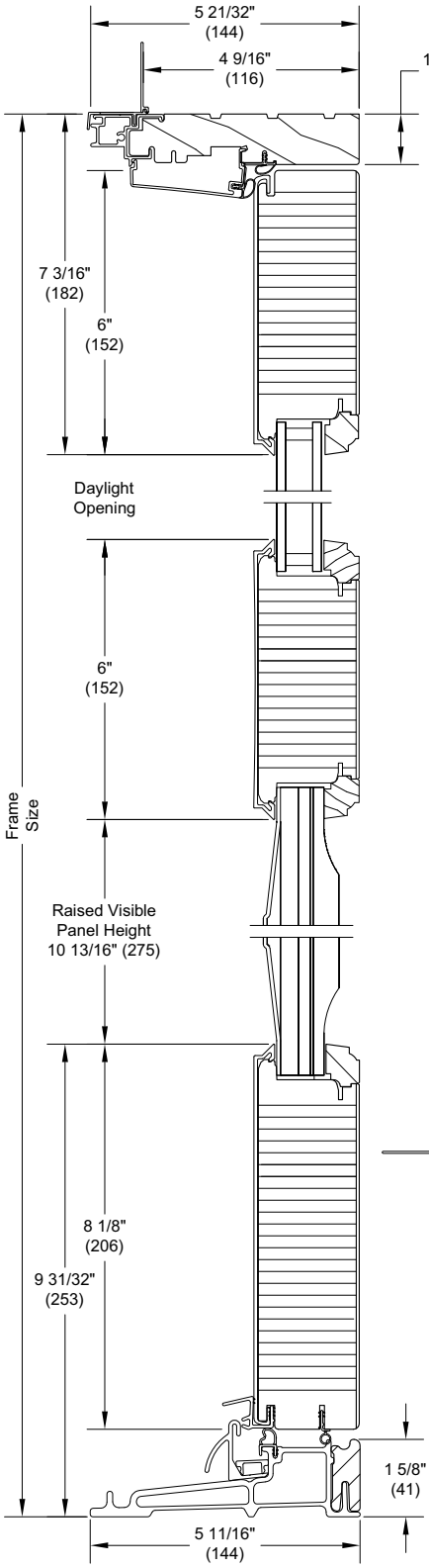

Head Jamb and Sill

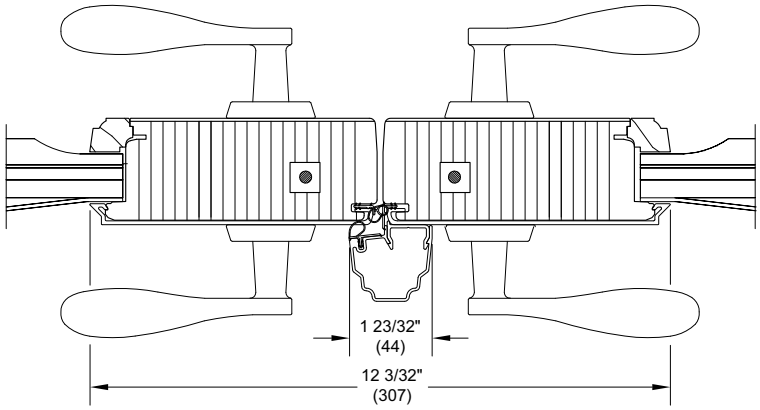

XX L Meeting Stiles

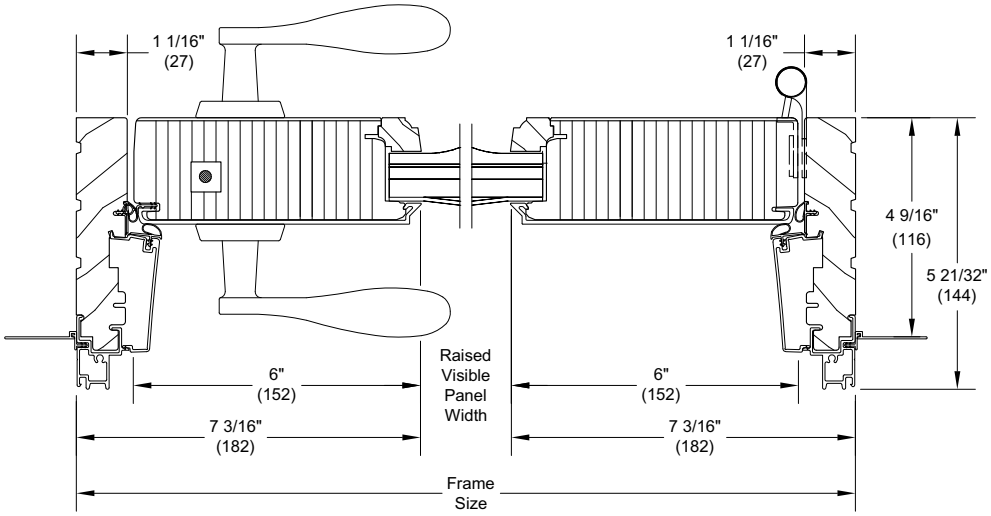

X R Jamb

Outswing Section Details: Operating

Scale: 3" = 1' 0"

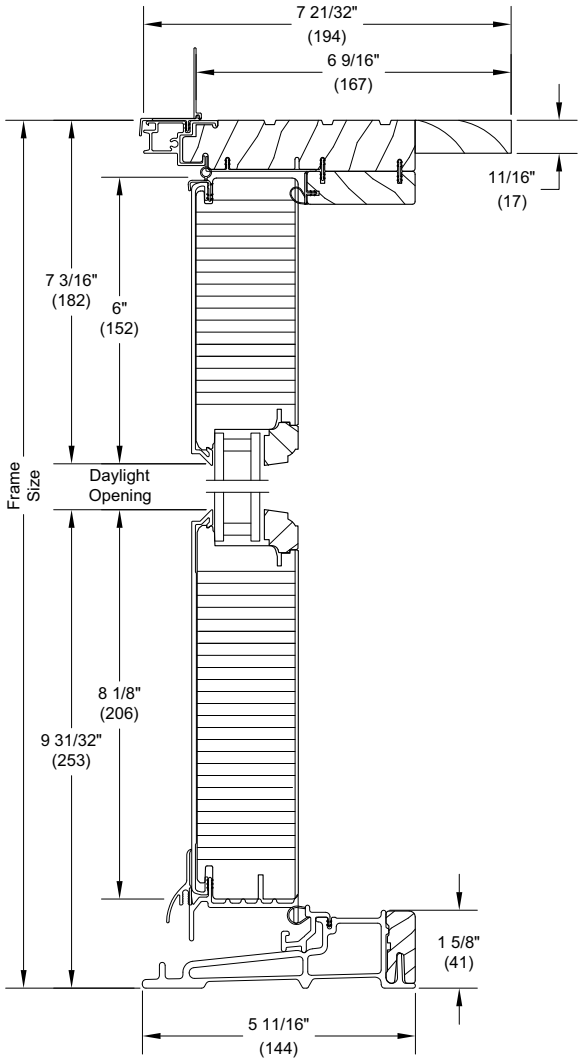

Head Jamb and Sill

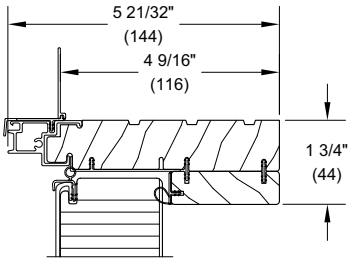

4 9/16" Head Jamb

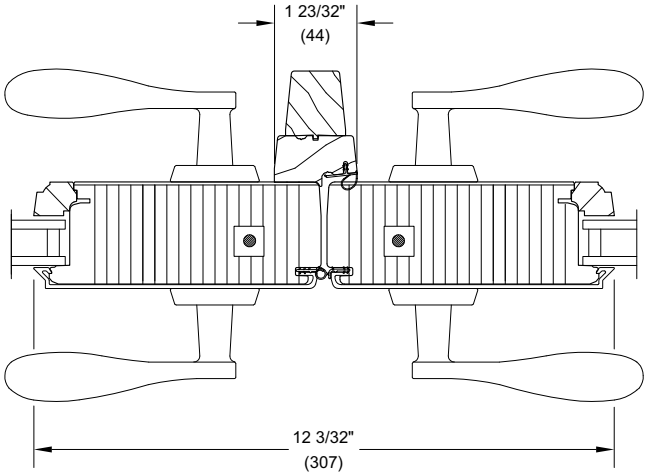

XX L - Meeting Stiles

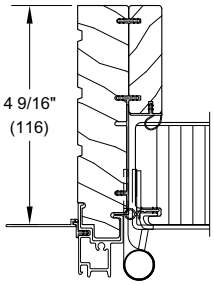

4 9/16" Jamb

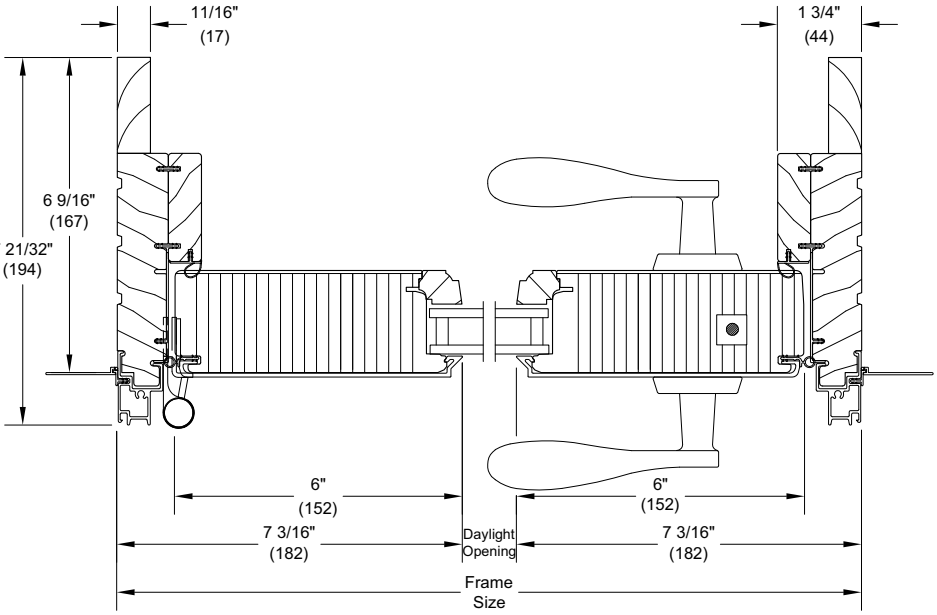

X R - Jamb

Outswing Section Details: Stationary and Sidelite

Scale: 3" = 1' 0"

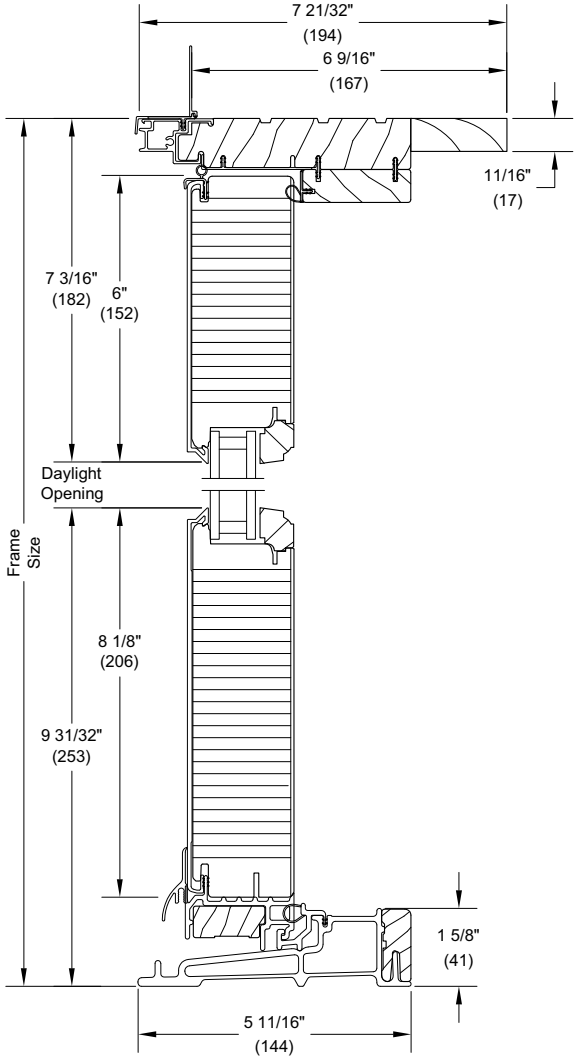

Head Jamb and Sill

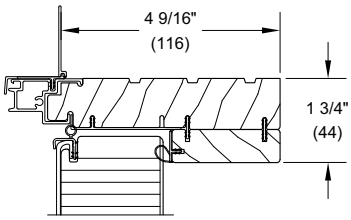

4 9/16" Head Jamb

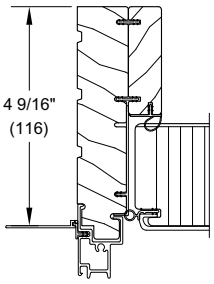

4 9/16" Jamb

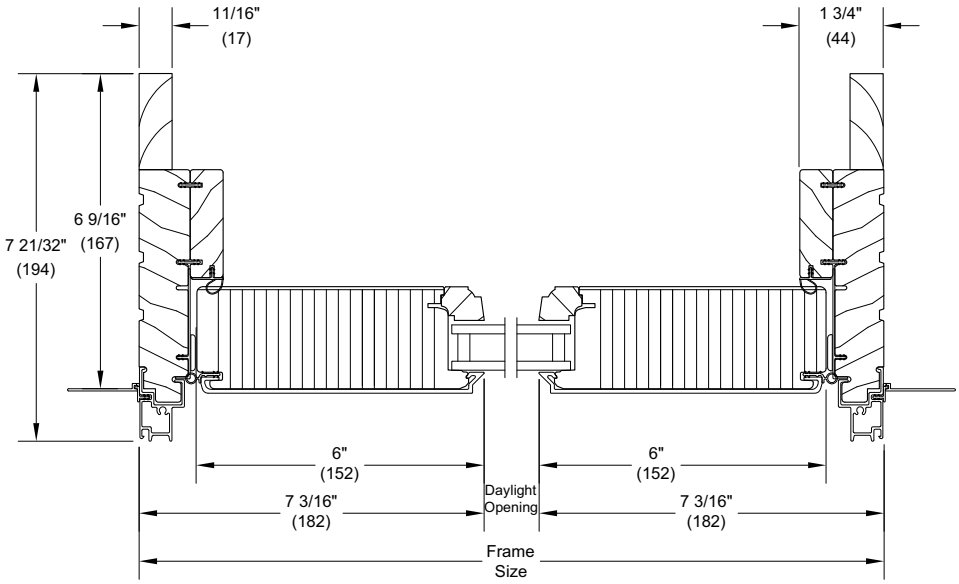

O - Jamb

Outswing Section Details: Clad Casing Options

Scale: 3" = 1' 0"

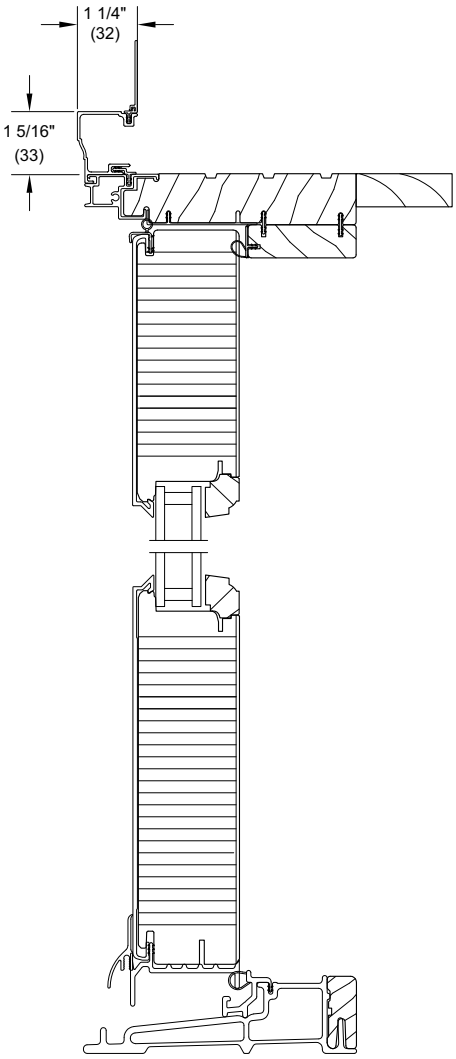

Head Jamb and Sill
with Clad Brick Mould Casing
6 9/16" Jamb Depth

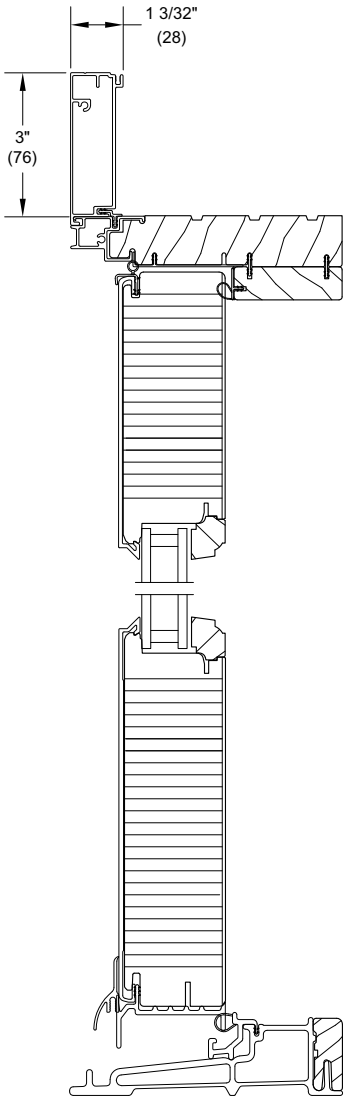

Head Jamb and Sill
with Clad Flat Casing
4 9/16" Jamb Depth

Outswing Section Details: Panel Configurations

Not to Scale

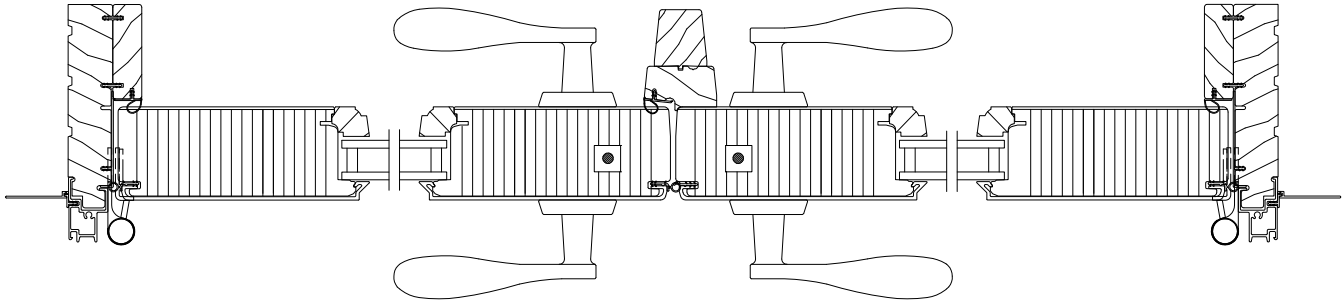

XX R 4 9/16" Jamb

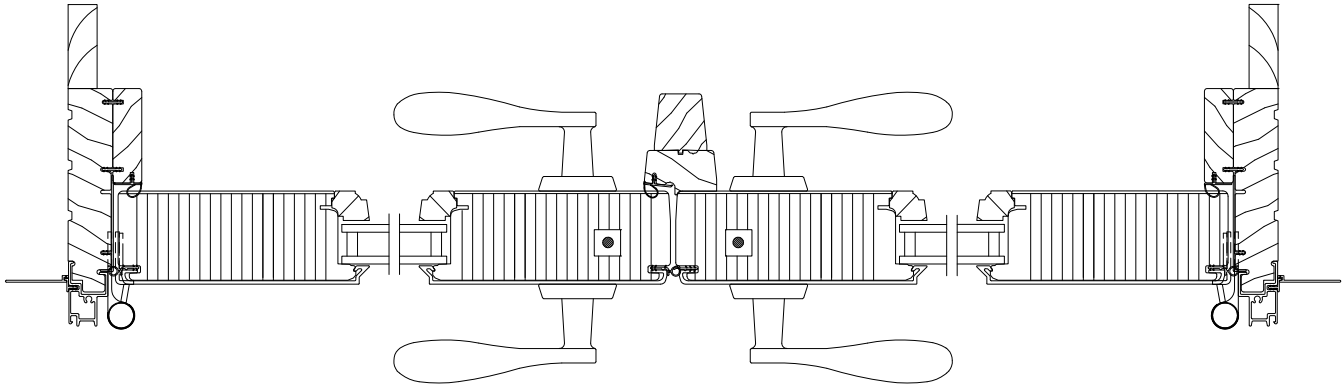

XX R 6 9/16" Jamb

Outswing Section Details: Flat Panel Placement

Scale: 3" = 1' 0"

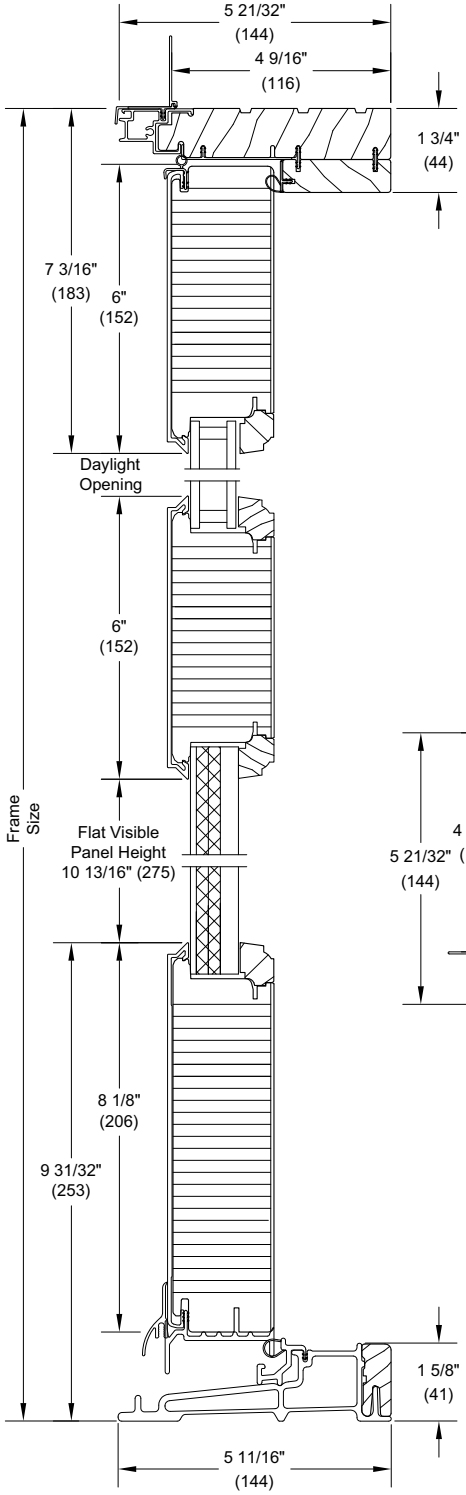

Head Jamb and Sill

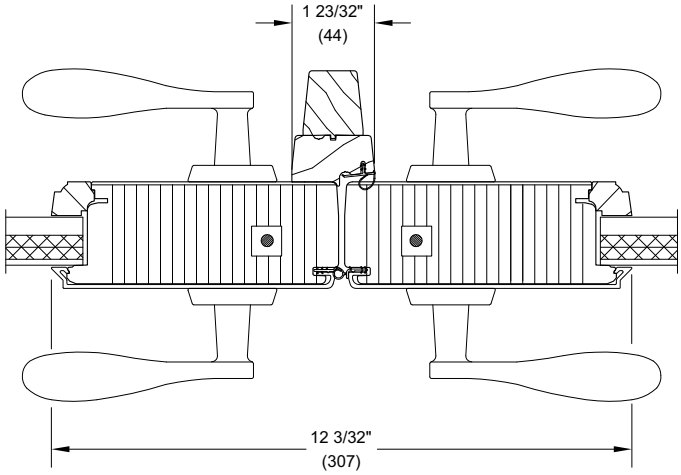

XX L - Meeting Stiles

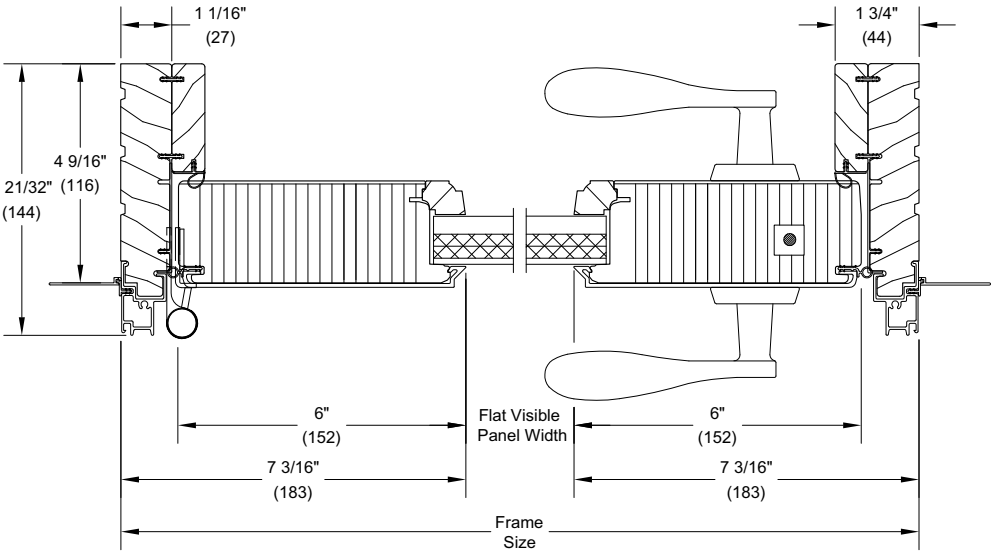

X R - Jamb - RT2 & RT6

Outswing Section Details: Raised Panel Placement

Scale: 3" = 1' 0"

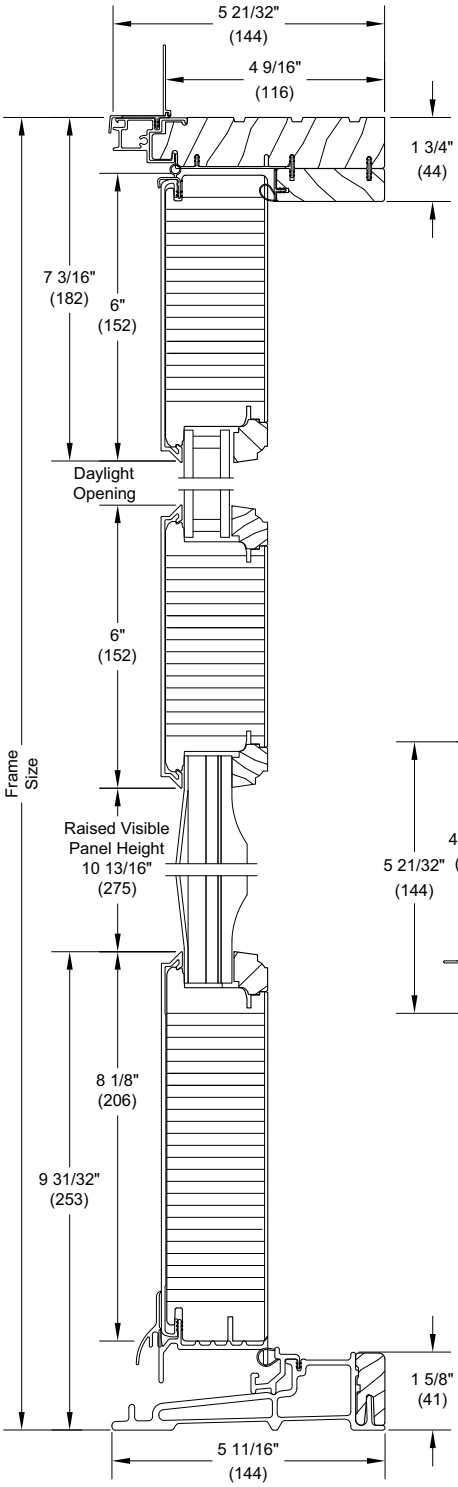

Head Jamb and Sill

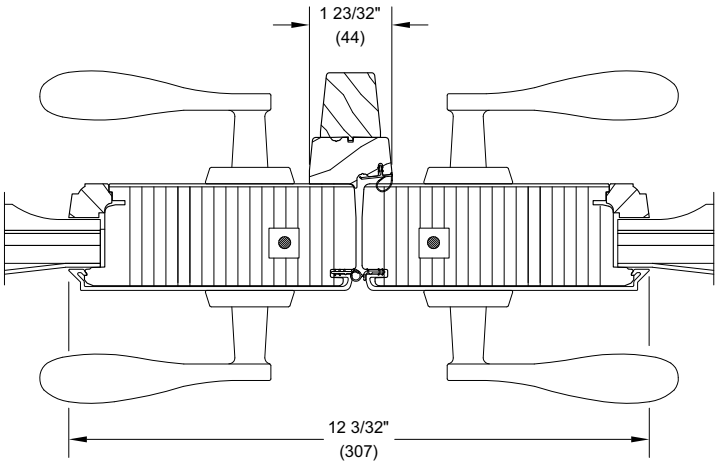

XX L - Meeting Stiles

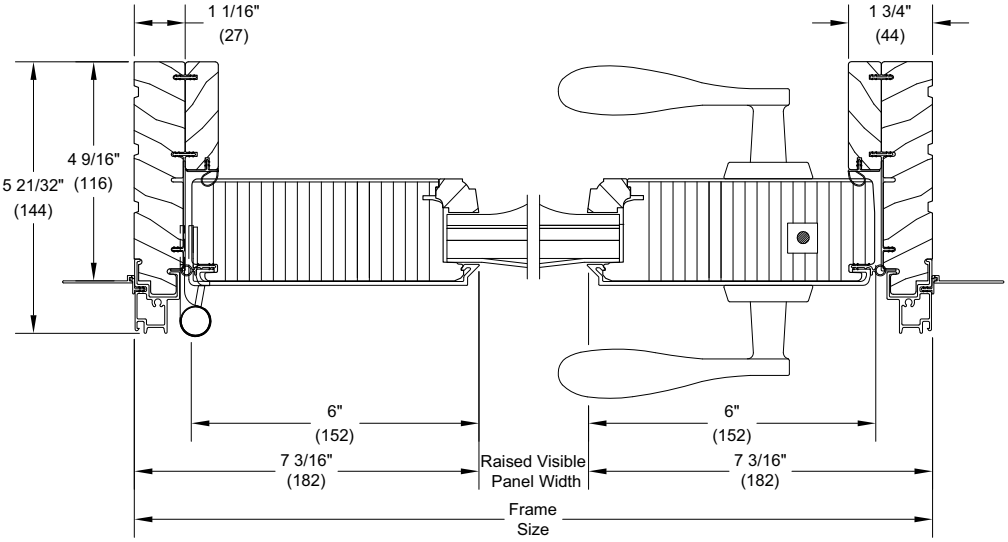

X R - Jamb