Clad Ultimate Insert Double Hung

Unit Features 1
Standard Divided Lite Option 3
Optional Interior Square Simulated Divided Lite 4
Egress and Vent Openings 5
Minimum and Maximum Guidelines, Certified Sizes and Ratings, Oversize Limits 6
Measurement Conversions: Operators 7
Measurement Conversions: Transom and Picture 8
Measurement Conversions: Field Measurement 9
Section Details: Operating 10
Section Details: Transom 11
Section Details: Picture 12
Mullions 13
Clad Application 14

Unit Features

Clad Ultimate Insert Double Hung: CINDH

Clad Ultimate Transom Windows: CINDHT

Clad Ultimate Picture Windows: CINDHP

Frame:

- Frame depth is 3 1/4" (83)
- Sill thickness, head and side jambs are 21/32" (17) with 1 5/16" (33) wide composite jambs.
- Sill options available: 8 degree or 14 degree bevel at the bottom or a flat sill with 1 5/32" (29) thickness.

Sash:

- Nominal sash thickness: 1 5/8" (41) with 3/4" (19) insulating glass. For Tri-pane glass, 1 7/8" (48) sash is required.
- Picture sash thickness: 2" (51) with 1" (25) glass.
- Operating sash are removable for cleaning.
- Incorporates traditional wide bottom rail in bottom sash - 3 9/16" (90).
- Single Hung conversion kits available. Cottage and oriel sash configuration available.

Hardware:

- Sash lock and keeper: Open style crescent cam lock with sash release lever, surface mounted. Color: Satin Taupe. Optional colors: Bronze, White, Brass, Antique Brass, Satin Chrome, Satin Nickel and Oil Rubbed Bronze.
- Balance system: block and tackle coil spring.
- The jamb track is a vinyl extrusion. Color: Beige. Optional color: White.

Weather Strip:

- Jamb weather strip is a foam type weather strip which seals against both the bottom sash and top sash stiles.
- Top sash has a weather strip on the check rail that seals to the bottom sash check rail when the sash lock is engaged.
- The top rail seals against a weather strip on the head jamb parting stop.
- The bottom sash has a weather strip on the bottom of the lower rail which seals against the sill.

Insect Screens:

- Aluminum screen: Full Screen standard, half screen optional.
- Screen mesh: Standard is Charcoal fiberglass. Optional: Charcoal High Transparency screen mesh (CH-HI-Tran) fiberglass, Charcoal aluminum wire, Black aluminum wire, Bright Bronze wire.
- Optional Double Hung Magnum screen

Glass:

- Glazing seal: Silicone glazed.
- Standard glass is insulating LoĒ²272® with Argon or Air.
- Insulating glass will be altitude adjusted with capillary tubes for higher elevations. Argon gas is not available for elevations that require capillary tubes.

Optional Glass

- LoĒ180™ with Argon or Air, LoĒ 366® with Argon or Air, clear, tints, tempered, obscure and others.
- LoĒ 366® with Argon or Air, LoĒ180™ with Argon or Air, Laminated, Tempered, Obscure, Bronze tint, Gray tint, Reflective Bronze or clear.
- 1" Tri-pane LoĒ-180™ outer piece and LoĒ-180™ inner piece with Argon
- 1" Tri-pane LoĒ-180™ outer piece and LoĒ-180™ inner piece with Krypton/Argon
- 1" Tri-pane LoĒ²272® outer piece and LoĒ²272® inner piece with Argon
- 1" Tri-pane LoĒ²272® outer piece and LoĒ²272® inner piece with Krypton/Argon
- 1" Tri-pane LoĒ 366® outer piece and LoĒ-180™ inner piece with Argon
- 1" Tri-pane LoĒ 366® outer piece and LoĒ-180™ inner piece with Krypton/Argon

Unit Features

Accessories:

- Installation Accessories
  - Factory installed vinyl sill fin (8 degree sill option only)
  - Two (2) 5/16″ - #10 x 2 1/2″ jamb jack screws
  - Four (4) #7 x 2″ Phillips pan-head installation screws
  - Two (2) jamb liner check rail pads
  - Two (2) color matched clad jamb plugs (exterior).
  - Two (2) wood flat head plugs (interior).
- Sash Lifts
  - High pressure zinc die-cast.
  - Color: Satin Taupe. Optional colors: Bronze, White, Brass, Antique Brass, Satin Chrome, Satin Nickel and Oil Rubbed Bronze.
- Aluminum Extrusions
  - Profiles: Frame Expander, Extruded Panning, Mullion covers as indicated by drawings.
  - Finish: Fluoropolymer modified acrylic topcoat applied over primer. Available in standard, select, and custom colors.

Standard Divided Lite Option

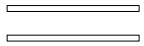

Insulating Glass

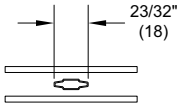

Aluminum 11/16"
Contour GBG

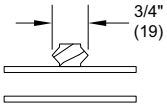

3/4" Grille

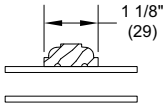

1 1/8" Grille

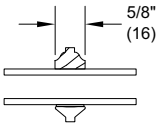

5/8" SDL

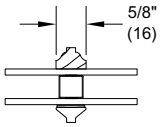

5/8" SDL
W/Spacer

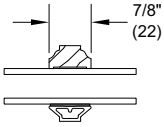

7/8" SDL

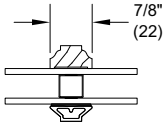

7/8" SDL
W/Spacer Bar

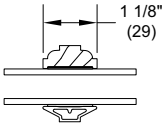

1 1/8" SDL

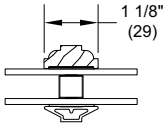

1 1/8" SDL
W/Spacer Bar

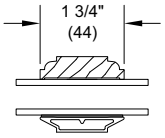

1 3/4" SDL

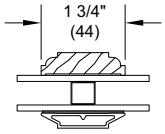

1 3/4" SDL
W/One Spacer Bar

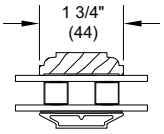

1 3/4" SDL
W/Two Spacer Bars

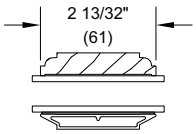

2 13/32" SDL

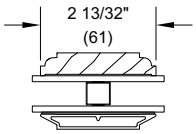

2 13/32" SDL
W/One Spacer Bar

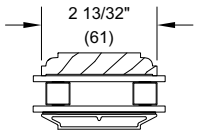

2 13/32" SDL
W/Two Spacer Bar

Optional Interior Square Simulated Divided Lite

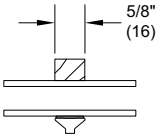

5/8" SDL

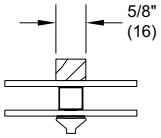

5/8" SDL
W/Spacer

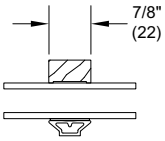

7/8" SDL

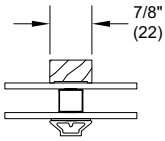

7/8" SDL
W/Spacer Bar

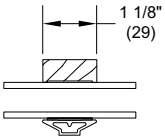

1 1/8" SDL

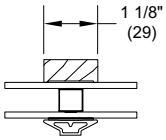

1 1/8" SDL
W/Spacer Bar

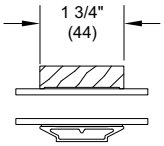

1 3/4" SDL

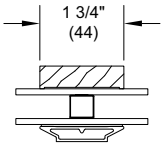

1 3/4" SDL
W/One Spacer Bar

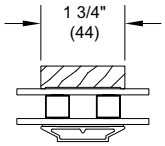

1 3/4" SDL
W/Two Spacer Bars

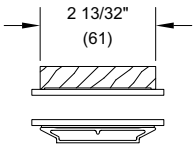

2 13/32" SDL

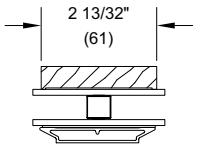

2 13/32" SDL
W/One Spacer Bar

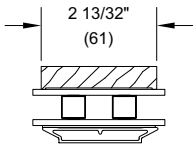

2 13/32" SDL
W/Two Spacer Bar

Egress and Vent Openings

Scale: 1 1/2” = 1’ 0"

Minimum Egress Requirements			
Inside Opening Width		Inside Opening Height	
in	mm	in	mm
26	(660)	84 1/16	(2135)
28	(711)	78	(1981)
30	(762)	72 15/16	(1853)
32	(813)	68 9/16	(1741)
34	(864)	64 3/4	(1645)
36	(914)	61 7/16	(1561)
38	(965)	58 7/16	(1484)

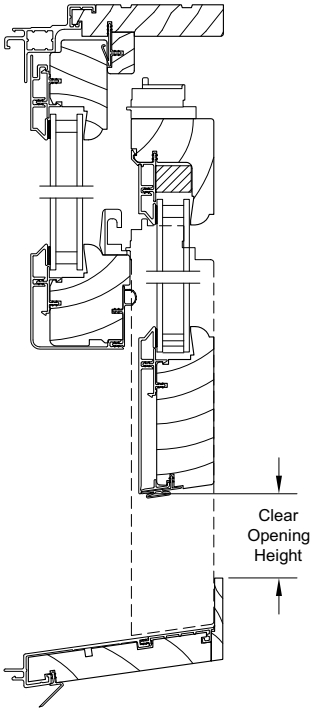

Head Jamb and Sill

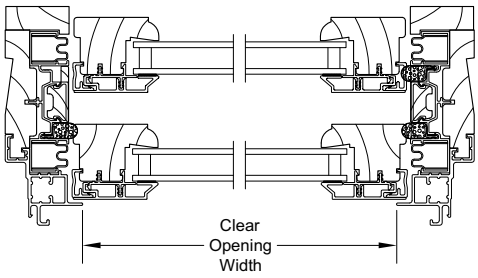

Jambs

NOTE: Units with an inside opening width greater than 38" wide and inside opening height greater 58 7/16" meet minimum egress requirements.

Minimum and Maximum Guidelines, Certified Sizes and Ratings, Oversize Limits

Minimum and Maximum Guidelines													
Unit Type		Width		x	Height		Width		x	Height		Max Glass	
		in	mm	×	in	mm	in	mm	×	in	mm	Sq. Feet	Sq. Meters
CINDH	Insulating Glass	13 11/16	(348)	×	48	(1219)	23 3/8	(594)	×	85 9/16	(2173)	10	0.929
CINDHT	Insulating Glass	13 11/16	(348)	×	48	(1219)	12 13/16	(325)	×	23	(584)	5	0.465
CINDHP	Insulating Glass	13 11/16	(348)	×	68	(1727)	13 15/16	(354)	×	85 9/16	(2173)	34	3.159

Certified Sizes and Ratings				
Unit Type	Frame Size Height		Frame Size Width	
			in	mm
	in	mm	45	(1143)
CINDH	77 3/8	(1965)	LC-PG30	

Certified Sizes and Ratings				
Unit Type	Frame Size Height		Frame Size Width	
			in	mm
	in	mm	75 5/8	(1921)
CINDHT	27 5/8	(702)	LC-PG40	

Certified Sizes and Ratings				
Unit Type	Frame Size Height		Frame Size Width	
			in	mm
	in	mm	68	(1727)
CINDHP	77 5/8	(1972)	CW-PG40	

Oversize Limts							
Unit Type	Maximum IO Width			Maximum IO Height		Maximum IO Area	
	in	mm	x	in	mm	Sq Feet	Sq Meters
CINDH	48	(1219)	x	85 19/32	(2174)	23 23/32	(2)
CINDHT	48	(1219)	x	23 1/16	(586)	7 11/16	(1)
CINDHP	68	(1727)	x	85 19/32	(2174)	40 7/16	(4)

NOTE: Maximum size allowed in either width or height, but not both; subject to maximum per sash glass area of 10ft^2.
Units with 3/16" tinted glass have a 9 sg. ft. (.84) maximum glass size per sash.
Some restrictions may apply. contact your marvin representative with questions.

Measurement Conversions: Operators

Clad Ultimate Insert Double Hung Operating Unit						
Unit Measurements		Width		Height		
From	To					
Daylight Opening		**in**	**mm**		**in**	**mm**
Daylight Opening	Bottom Sash OM	+ 3 17/32	(90)		+ 5 11/16	(144)
Daylight Opening	Top Sash OM	+ 3 17/32	(90)		+ 3 15/16	(100)
Daylight Opening	Glass OM	+ 1 1/16	(27)		+ 1 1/16	(27)
Daylight Opening	Screen OM	+ 4 13/32	(112)	(DLO x 2)	+ 8 1/2	(216)
Daylight Opening	Grille	order by DLO		order by DLO		

Clad Ultimate Insert Double Hung Operating Unit								
Unit Measurements		Width		Height Flat Bottom Sill				
From	To							
Inside Opening		**in**	**mm**	**in**	**mm**		**in**	**mm**
Inside Opening	Bottom Sash OM	-3 7/32	(82)	-8	(203)	÷ 2	+ 4 5/8	(117)
Inside Opening	Top Sash OM	-3 7/32	(82)	-8	(203)	÷ 2	+ 2 7/8	(73)
Inside Opening	Daylight Opening	-6 3/4	(171)	-10 1/8	(257)	÷ 2		
Inside Opening	Glass OM	-5 11/16	(144)	-8	(203)	÷ 2		
Inside Opening	Screen OM	-2 11/32	(60)	-1 5/8	(41)			
Inside Opening	Frame OM @ Interior	-3/8	(10)	-1/4	(06)			
Inside Opening	Frame OM @ Exterior	-3/8	(10)	-1/4	(06)			

Height 8 and 14 Degree Bottom Sill				
in	**mm**		**in**	**mm**
-7 7/16	(189)	÷ 2	+ 4 5/8	(117)
-7 7/16	(189)	÷ 2	+ 2 7/8	(73)
-9 9/16	(243)	÷ 2		
-7 7/16	(189)	÷ 2		
-1 1/16	(27)			
-1/4	(06)			
8 Degree Bottom Sill			14 Degree Bottom Sill	
+ 5/16	(08)		+ 11/16	(17)

Measurement Conversions: Transom and Picture

Clad Ultimate Insert Double Hung Transoms					
Unit Measurements		Width		Height (not affected by sill)	
From	To				
Daylight Opening		**in**	**mm**	**in**	**mm**
Daylight Opening	Sash OM	+ 3 17/32	(90)	+ 4 3/8	(111)
Daylight Opening	Glass OM	+ 1 1/16	(27)	+ 1 1/16	(27)
Daylight Opening	Grille	order by DLO		Order by DLO	

Unit Measurements		Width		Height 8 and 14 Degree Bottom Sill					
From	To								
Inside Opening		**in**	**mm**	**in**	**mm**	**in**	**mm**	**in**	**mm**
Inside Opening	Sash OM	-3 7/32	(82)	-2 1/8	(54)	-1 9/16	(40)		
Inside Opening	Daylight Opening	-6 3/4	(171)	-6 15/32	(164)	-5 15/16	(151)		
Inside Opening	Glass OM	-5 11/16	(144)	-5 13/32	(137)	-4 7/8	(124)		
Inside Opening	Frame OM @ Interior	-3/8	(10)	-1/4	(06)	+ 1/4	(06)		
Inside Opening	Frame OM @ Exterior	-3/8	(10)	-1/4	(06)	8 Degree Bottom Sill		14 Degree Bottom Sill	
						+ 5/16	(08)	+ 11/16	(17)

Clad Insert Double Hung Picture					
Unit Measurements		Width		Height (not affected by sill type)	
From	To				
Daylight Opening		**in**	**mm**	**in**	**mm**
Daylight Opening	Sash OM	+ 4 7/8	(124)	+ 5 3/4	(146)
Daylight Opening	Glass OM	+ 1 3/16	(30)	+ 1 3/16	(30)
Daylight Opening	Grille	order by DLO		order by DLO	

Unit Measurements		Width		Height					
From	To								
Inside Opening		**in**	**mm**	**in**	**mm**	**in**	**mm**	**in**	**mm**
Inside Opening	Sash OM	-1 7/8	(48)	-2	(51)	-1 7/16	(37)		
Inside Opening	Daylight Opening	-6 3/4	(171)	-7 3/4	(197)	-7 3/16	(183)		
Inside Opening	Glass OM	-5 9/16	(141)	-6 9/16	(167)	-6	(152)		
Inside Opening	Frame OM @ Interior	-3/8	(10)	-1/4	(06)	-1/4	(06)		
Inside Opening	Frame OM @ Exterior	-3/8	(10)	-1/4	(06)	8 Degree Sill Bottom		14 Degree Sill Bottom	
						+ 5/16	(08)	+ 11/16	(17)

Measurement Conversions: Field Measurement

Conversion from Field Measurement to Frame OM		
Width		
Condition	Formula	
If blind stop width is 1/2 inch or less	CINDH frame OM width = inside opening width - 0.375	
Height		
Condition	Type of Sill	Formula
If old sill angle is less than 8 degrees	Flat bottom Sill	CINDH frame OM height = inside opening height - 0.250
If old sill angle is 8 degrees or more but less than 14 degrees	8 degree bottom sill	CINDH frame OM height = inside opening height + 0.312 (frame OM height has a .250 clearance)
If old sill angle is 14 degrees or more	14 degree bottom sill	CINDH frame OM height = inside opening height + 0.700 (frame OM height has a .250 clearance)

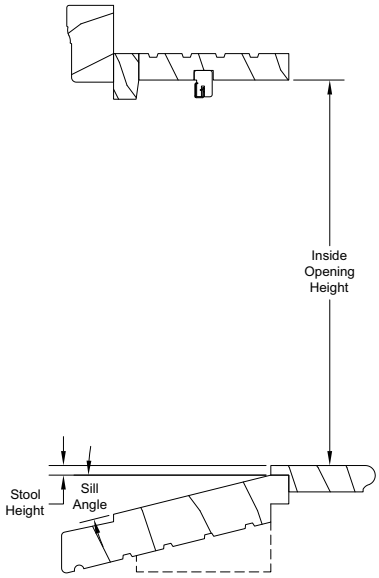

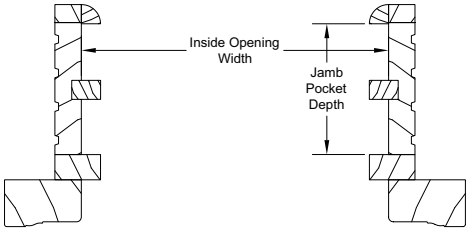

NOTE: For additional measuring instructions see Marvin Insert Window Measuring Instructions.

Section Details: Operating

Scale: 3" = 1' 0"

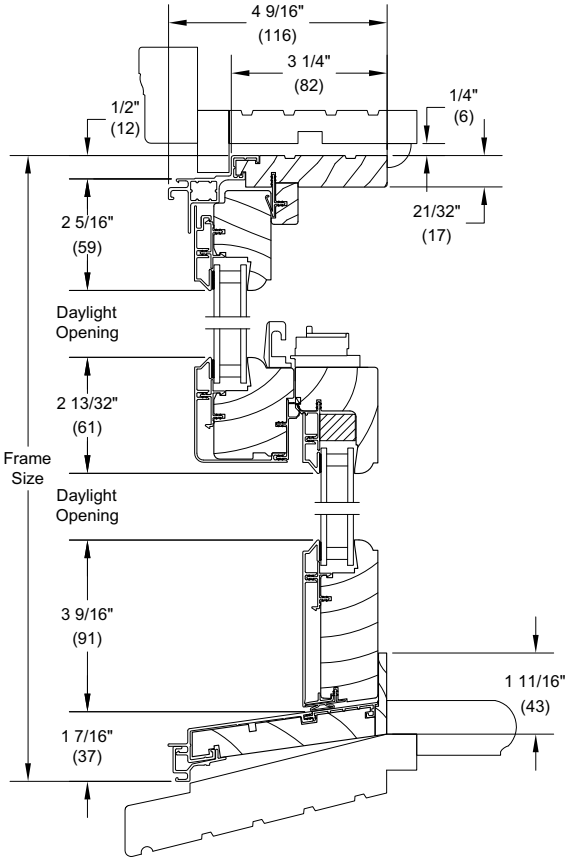

14 Degree Bevel Sill Option
Installed in existing frame

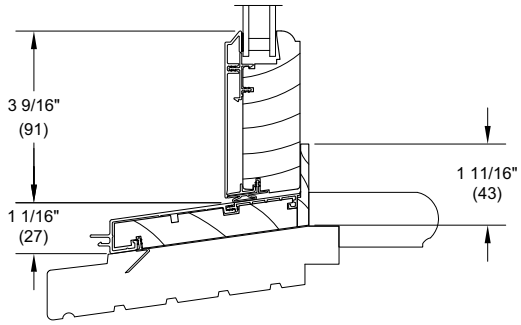

8 Degree Bevel Sill Option
Installed in existing frame

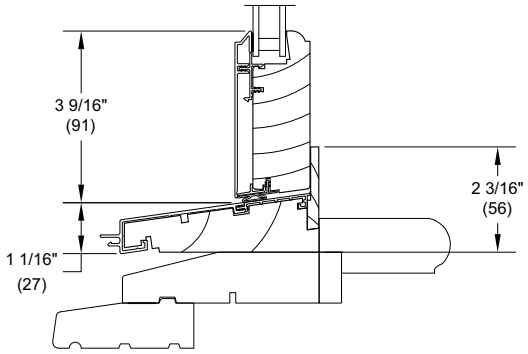

Flat Frame Sill Option
Installed in existing frame

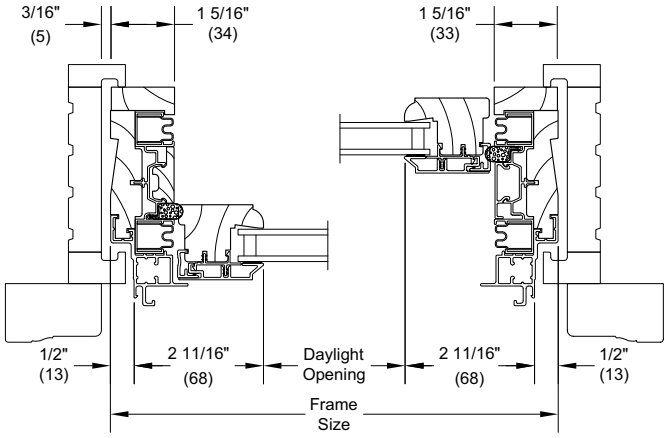

Jamb
in existing frame

Section Details: Transom

Scale: 3" = 1' 0"

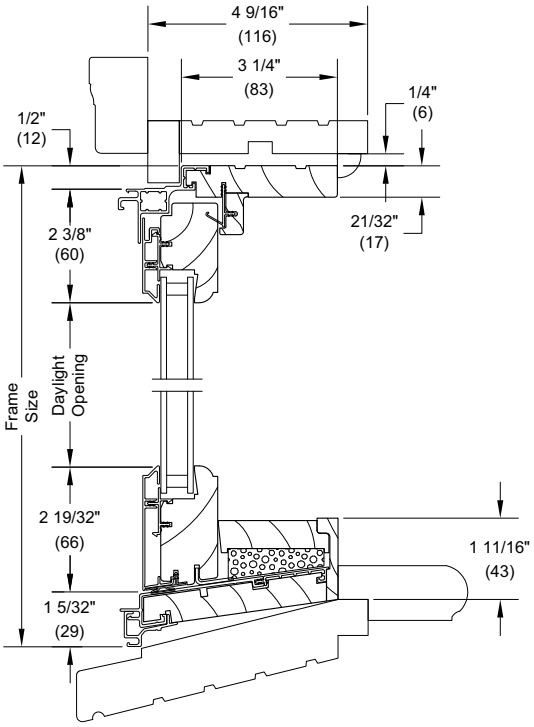

14 Degree Bevel Sill Option
Installed in existing frame

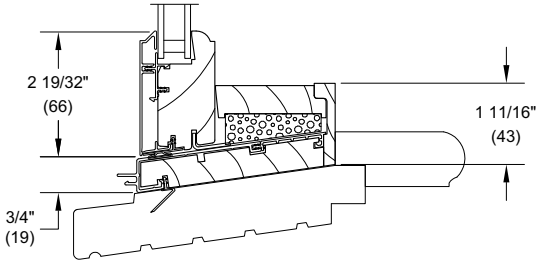

8 Degree Bevel Sill Option
Installed in existing frame

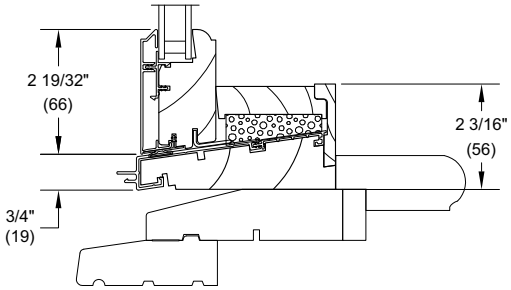

Flat Frame Sill Option
Installed in existing frame

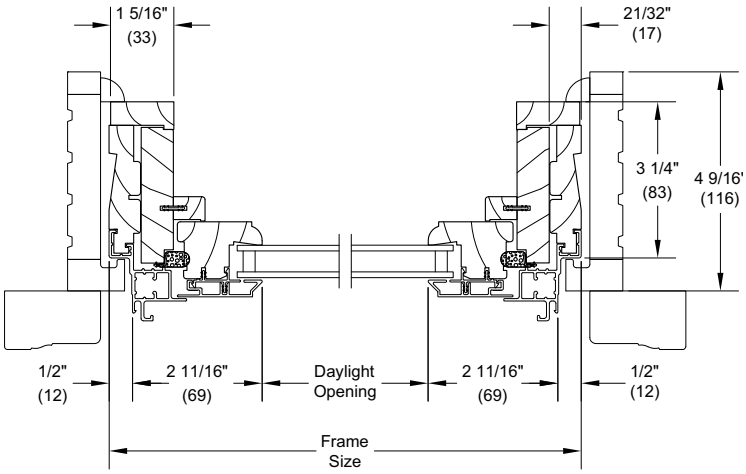

Jamb
in existing frame

Section Details: Picture

Scale: 3" = 1' 0"

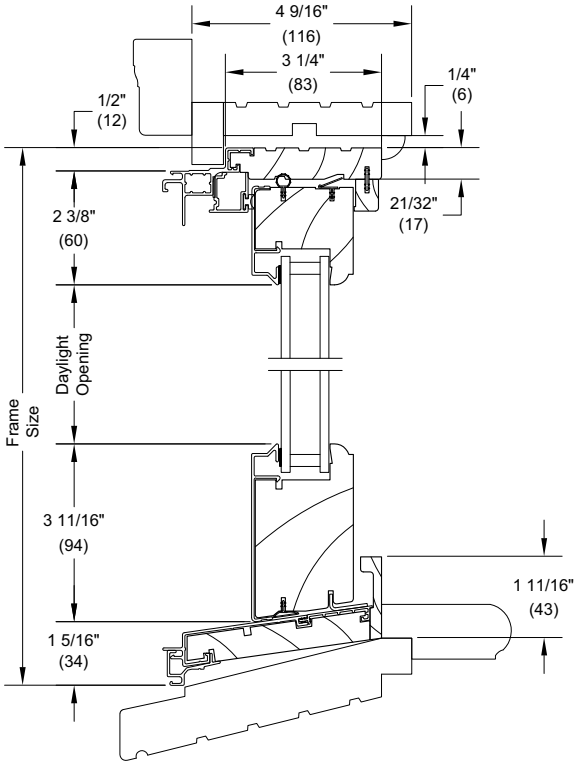

14 Degree Bevel Sill Option
Installed in existing frame

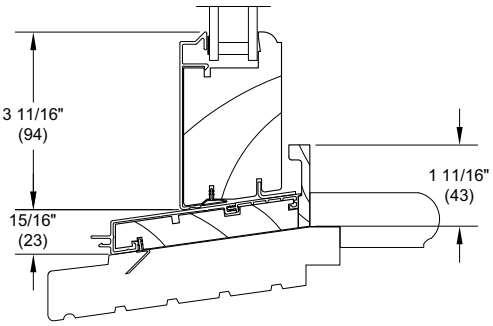

8 Degree Bevel Sill Option
Installed in existing frame

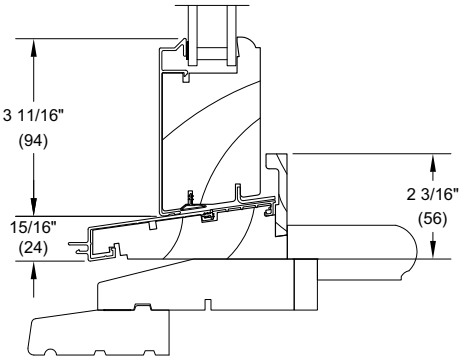

Flat Frame Sill Option
Installed in existing frame

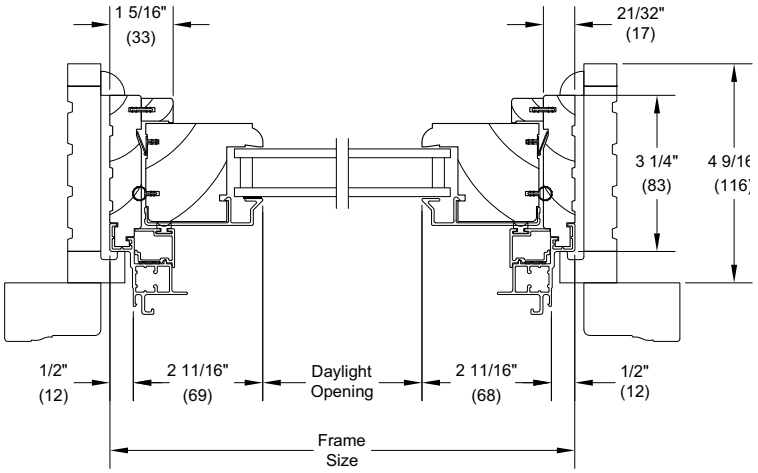

Jamb
in existing frame

Mullions

Scale: 3" - 1' 0"

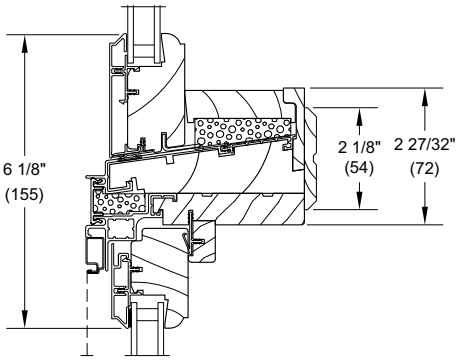

Transom/Operator
CINDH Horizontal Mullion

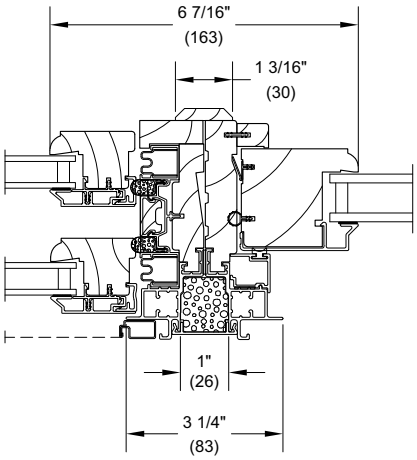

Operator/Picture
CINDH Vertical Mullion

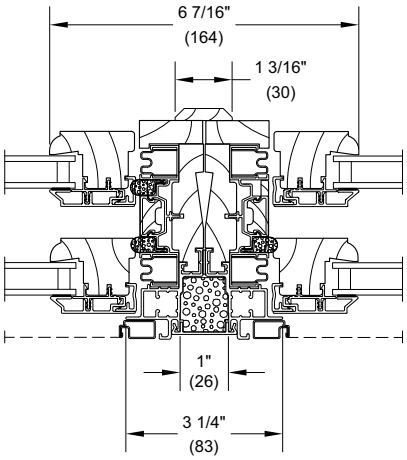

Operator/Operator
CINDH Vertical Mullion

Clad Application

Scale: 3" - 1' 0"

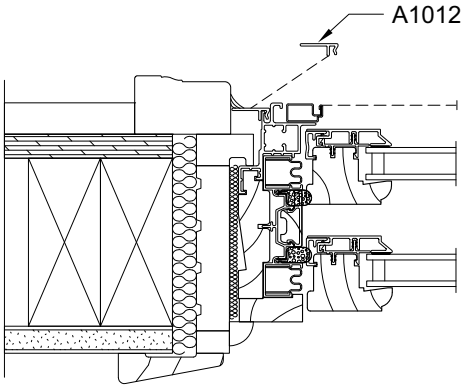

Frame Expander

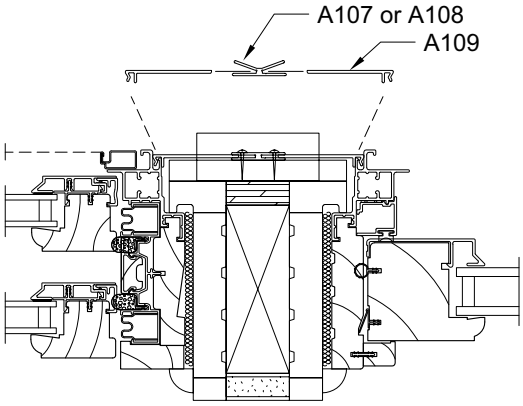

Frame Expander With Mullion Expander

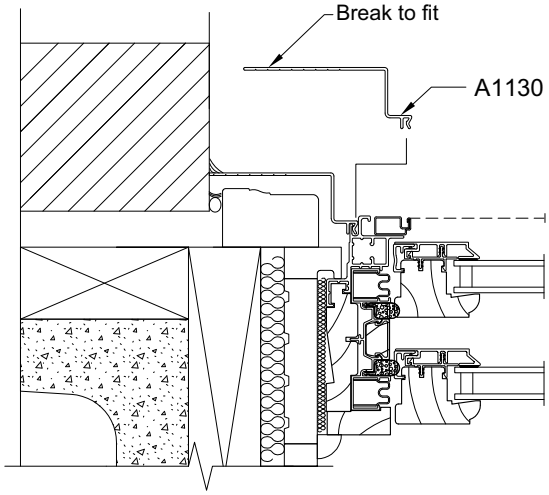

Panning-(Masonry shown)

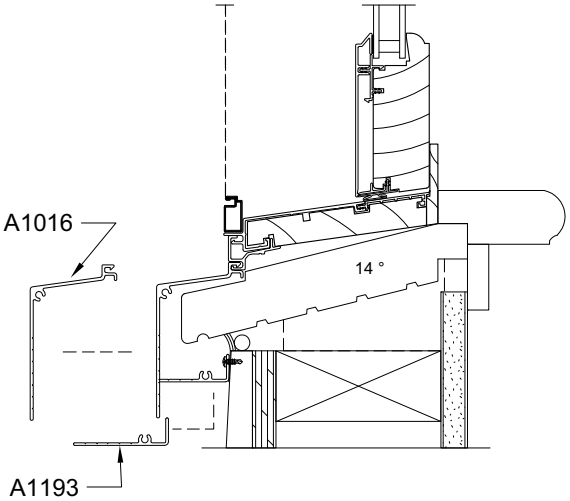

Sill Panning

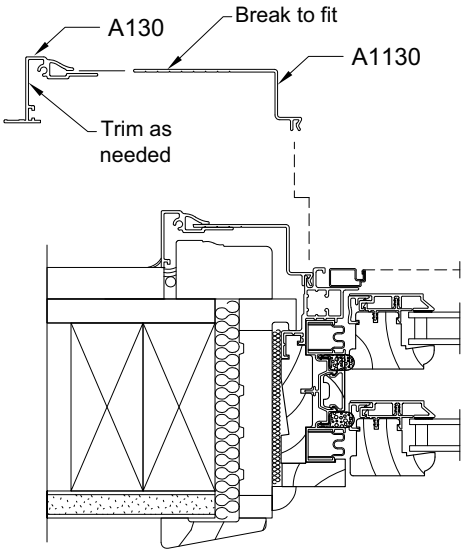

Clad Adjustable Brick Mould Casing

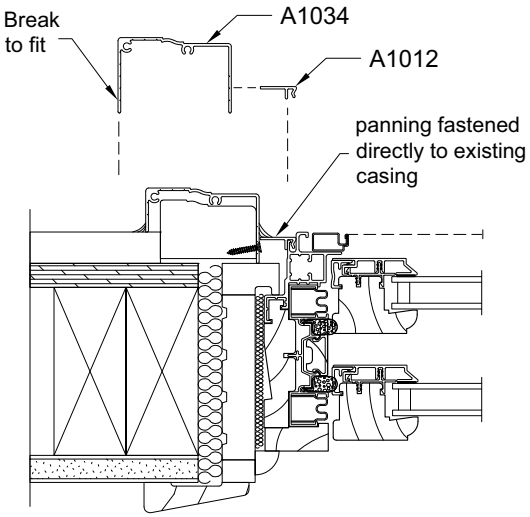

Panning-(BMC shown)