Clad Direct Glaze Polygon and Round Top

Unit Features: Clad Direct Glaze Polygon 1
Min/Max Guidelines and Certified Sizes: Clad Direct Glaze Polygon 2
Measurement Conversions: Clad Direct Glaze Polygon 3
Slope To Angle and Angle to Pitch Conversion - Clad Direct Glaze Polygon 4
Section Details: Clad Direct Glaze Polygon - Standard and Impact 5
Section Details: Clad Direct Glaze Polygon Mullion Options 6
Clad Direct Glaze Polygon Shape Reference 7
Unit Features: Clad Direct Glaze Round Top 8
Min/Max Guidelines and Certified Sizes: Clad Direct Glaze Round Top 9
Measurement Conversions: Clad Direct Glaze Round Top 10
Standard Sizes: Clad Ultimate Glider Direct Glaze, Full Circle and Ellipse Series 11
Standard Sizes: Clad Ultimate Casement True Half, Elliptical and Quarter Circle 12
Standard Sizes: Clad Ultimate Casement Eyebrow Above Springline 13
Standard Sizes: Clad Ultimate Double Hung True Half Circle and Elliptical Direct Glaze 15
Standard Sizes: Clad Ultimate Double Hung - Eyebrow Above Springline 16
Section Details: Clad Direct Glaze Round Top 18
Section Details: Clad Direct Glaze Round Top Mullion Options 19
Clad Direct Glaze Round Top Shape Reference 20
Section Details: Casing Options - Direct Set Polygon and Direct Set Round Top 21
Direct Glaze Polygon and Direct Set Round Top - Insulated Glass Divided Lite Options 22
Direct Glaze Polygon and Direct Set Round Top - Insulated Glass Square SDL Option 23

Unit Features: Clad Direct Glaze Polygon

Clad Direct Glaze Polygon: CDGP

Clad Direct Glaze Round Top: CDGRT

Frame

- Frame width: 4 9/16” (116).
- Frame thickness: 1 3/32” (28).
- Minimum frame angle 12°.

Glass and Glazing:

- Glazing seal: Silicone glazed from the interior.
- Standard glass is insulating LoĒ²272® with Argon or Air.
- Optional glazing available: LoĒ180™ with Argon or Air, LoĒ 366® with Argon or Air, clear, tints, tempered, obscure and others.
- Insulating glass will be altitude adjusted with capillary tubes for higher elevations. Argon gas is not available for elevations that require capillary tubes.

Glazing for Impact Units:

- Glazing seal: the glass is set from the interior against a bead of Rapid Strength Silicone. The perimeter of the glass is backfilled with Rapid Strength Silicon. The interior wood bead is secured to the frame with 1 3/8" (35) brad nails nominal 5" on center.
- Impact glass setting blocks are used to reduce the change of glass sliding.

Min/Max Guidelines and Certified Sizes: Clad Direct Glaze Polygon

Minimum and Maximum Guidelines - Direct Glaze Polygon													
Unit Type		Frame Size										Minimum Short leg	
		Min Size Unit					Max Size Unit						
		in	mm	×	in	mm	in	mm	×	in	mm	in	mm
Insulating Glass 3/4" (19) IG	P3	24	(610)	×	24	(610)	64	(1626)	×	96 1/8	(2442)	N/A	N/A
	P4	16	(406)	×	16	(406)	96 1/8	(2442)	×	64	(1626)	9 1/2	(241)
Insulating Glass 1" (25) IG	P5	16	(406)	×	16	(406)	88	(2235)	×	96 1/8	(2442)	9 1/2	(241)
	P6, P8	22	(559)	×	22	(559)	96 1/8	(2442)	×	88	(2235)	N/A	N/A

Certified Sizes and Ratings									
Unit Type	Glass Type	Frame Size Height		Frame Size Width					
				in	mm	in	mm	in	mm
		in	mm	48	(1219)	84	(2134)	73	(1854)
Clad Direct Glaze	5.7mm (1/4") SG Tempered	96	(2438)	-		CW-PG55-FW		-	
Clad IZ3 Direct Glaze	24.5mm (1") IG, 4.7 Tempered/9.8/10.1mm laminated	73	(1854)	-		-		CW-PG55-FW	
		120	(3048)	CW-PG55-FW		-		-	

NOTE: Minimum angle on any shape is 15 degrees.

Measurement Conversions: Clad Direct Glaze Polygon

Not to Scale

Unit Measurements		Width		Height	
From	**To**				
Rough Opening		**in**	**mm**	**in**	**mm**
OM of Frame	Rough Opening	+ 1	(25)	+ 1/2	(13)
Masonry Opening w/out BMC	Rough Opening	+ 1/2	(13)	+ 1/4	(06)
Masonry Opening w/BMC	Rough Opening	-2 1/8	(54)	-1 11/16	(43)
Masonry Opening w/Flat Casing	Rough Opening	-5 1/2	(140)	-3 3/8	(86)
Glass		**in**	**mm**	**in**	**mm**
Daylight Opening	Glass	+ 1 3/8	(35)	+ 1 3/8	(35)

NOTE: Minimum angle on any shape is 15 degrees.

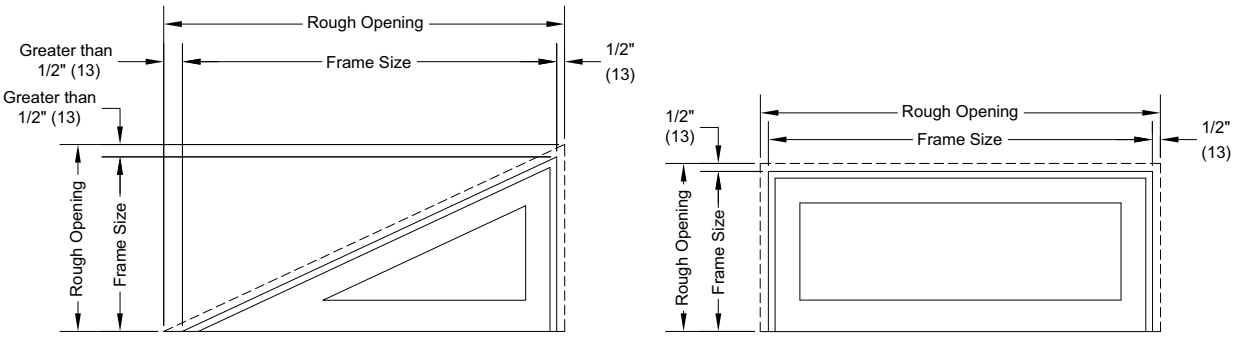

NOTE: 1/2" (13) Rough Opening tolerance is maintained perpendicular to the frame of polygon units.
1/4" (6) Masonry Opening tolerance is maintained perpendicular to the frame or casing of polygon units.
Measurement tolerances vary due to polygon angles. Specify either Frame Size or Rough Opening measurement, Marvin will calculate the appropriate tolerances.
Elevations above are shown without casing.

Slope To Angle and Angle to Pitch Conversion - Clad Direct Glaze Polygon

Slope to Angle / Degree Conversions					
Slope	Angle	Degree / Minutes	Slope	Angle	Degree / Minutes
1/12	4.76	4 degree 46'	13/12	47.29	47 degree 14'
2/12	9.46	9 degree 28'	14/12	53.13	49 degree 24'
3/12	14.04	14 degree 2'	15/12	54.78	51 degree 20'
4/12	18.43	18 degree 26'	16/12	56.31	53 degree 8'
5/12	22.62	22 degree 37'	17/12	54.78	54 degree 47'
6/12	26.57	26 degree 34'	18/12	56.31	56 degree 19'
7/12	30.26	30 degree 15'	19/12	57.72	57 degree 43'
8/12	33.69	33 degree 41'	20/12	59.04	59 degree 2'
9/12	36.87	36 degree 52'	21/12	60.26	60 degree 15'
10/12	39.81	39 degree 48'	22/12	61.39	61 degree 23'
11/12	42.51	42 degree 31'	23/12	62.45	62 degree 27'
12/12	45.00	45 degree 0'	24/12	63.43	63 degree 26'

Angle to Pitch conversions							
Angle	Pitch	Angle	Pitch	Angle	Pitch	Angle	Pitch
1	0.21/12	26	5.85*12	51	14.82/12	76	48.13/12
2	0.42/12	27	6.11/12	52	15.36/12	77	51.98/12
3	0.63/12	28	6.38/12	53	15.92/12	78	56.56/12
4	0.84/12	29	6.65/12	54	16.52/12	79	61.73/12
5	1.05/12	30	6.93/12	55	17.14/12	80	68.06/12
6	1.26/12	31	7.21/12	56	17.79/12	81	75.77/12
7	1.47/12	32	7.50/12	57	18.48/12	82	85.38/12
8	1.69/12	33	7.79/12	58	19.20/12	83	97.73/12
9	1.90/12	34	8.09/12	59	19.97/12	84	114.17/12
10	2.12/12	35	8.40/12	60	20.78/12	85	137.16/12
11	2.33/12	36	8.72/12	61	21.65/12	86	171.61/12
12	2.55/12	37	9.04/12	62	22.57/12	87	228.97/12
13	2.77/12	38	9.38/12	63	23.55/12	88	343.64/12
14	2.99/12	39	9.72/12	64	24.60/12	89	687.48/12
15	3.22/12	40	10.07/12	65	25.73/12		
16	3.44/12	41	10.43/12	66	26.95/12		
17	3.67/12	42	10.80/12	67	28.27/12		
18	3.90/12	43	11.19/12	68	29.70/12		
19	4.13/12	44	11.59/12	69	31.26/12		
20	4.37/12	45	12.00/12	70	32.97/12		
21	4.61/12	46	12.43/12	71	34.85/12		
22	4.85/12	47	12.87/12	72	36.93/12		
23	5.09/12	48	13.33/12	73	39.25/12		
24	5.34/12	49	13.80/12	74	41.85/12		
25	5.60/12	50	14.30/12	75	44.78/12		

Section Details: Clad Direct Glaze Polygon - Standard and Impact

Scale: 3' = 1' 0"

Insulating Glass

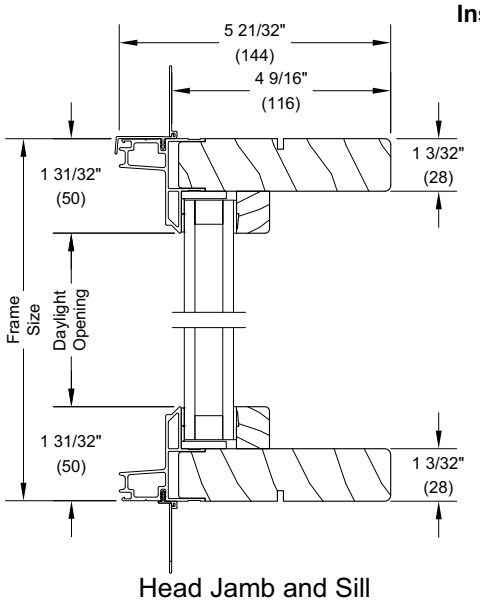

Head Jamb and Sill

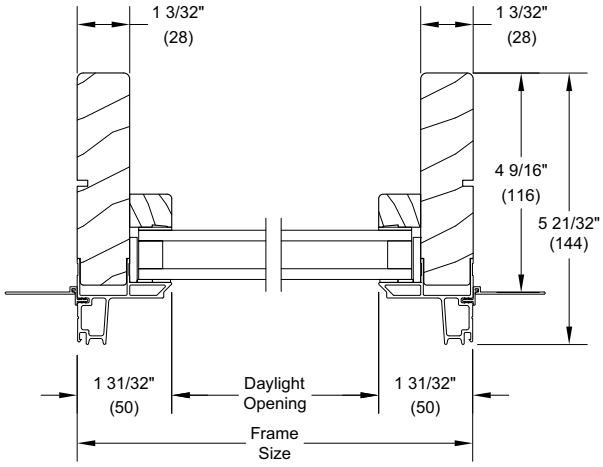

Jambs

IZ3 - Impact Glass

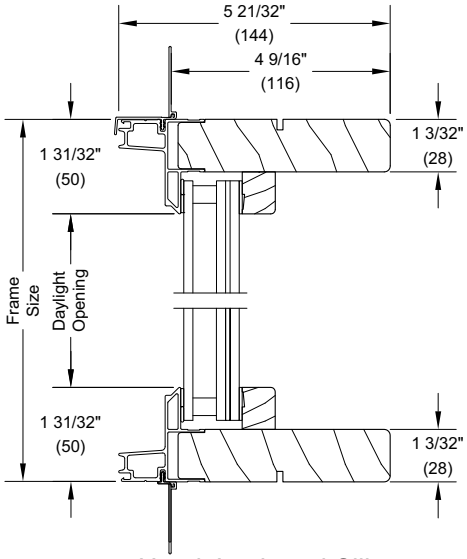

Head Jamb and Sill

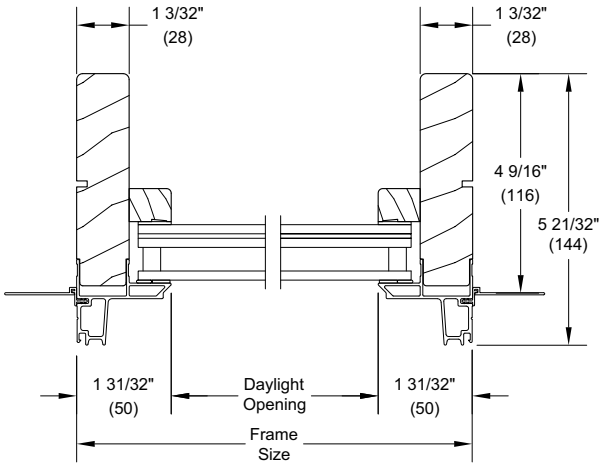

Jambs

Section Details: Clad Direct Glaze Polygon Mullion Options

Scale: 3' = 1' 0"

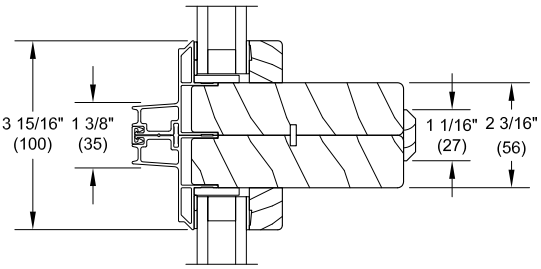

Horizontal Mullion

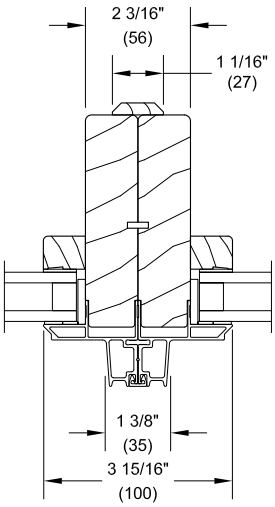

Vertical Mullion

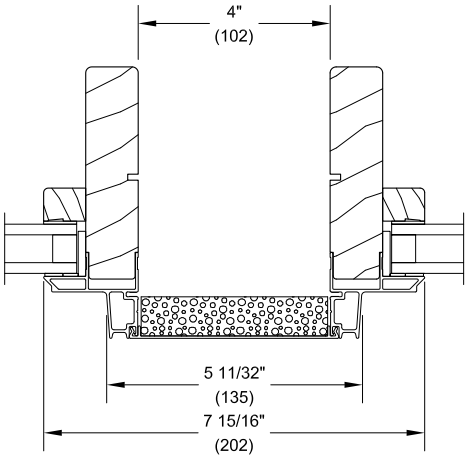

4" Space Mull

Clad Direct Glaze Polygon Shape Reference

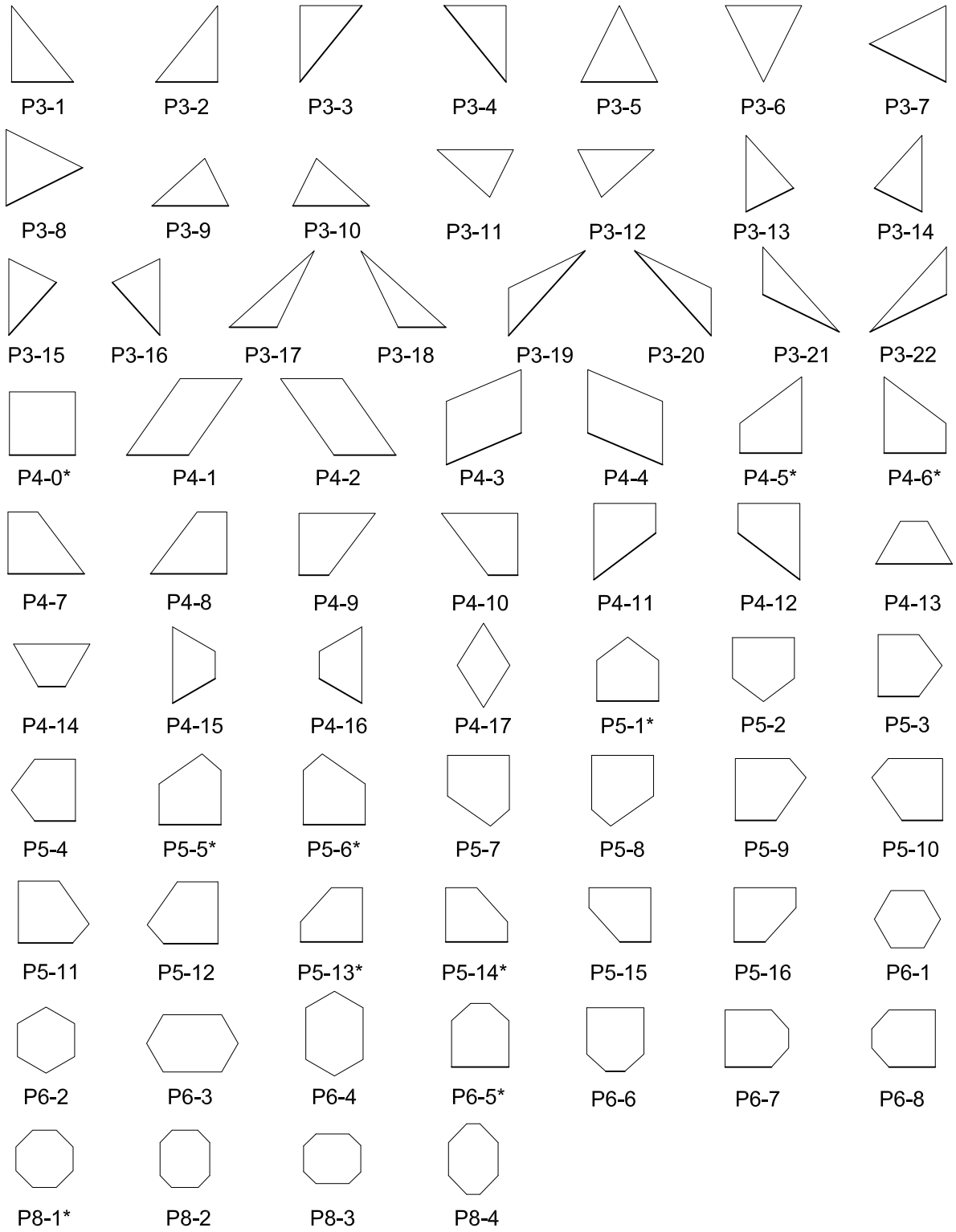

NOTE: Please contact your Marvin representative for availability and more information.

Unit Features: Clad Direct Glaze Round Top

Frame:

- Frame thickness: 11/16” (17).
- Frame width: 4 9/16” (116).
- Curved frames have laminated wood, straight frames have clear wood.

Glass and Glazing:

- Units are glazed from the interior and uses insulating glass.
- Glazing seal: Silicone glazed to the interior and exterior.
- Standard glass is insulating LoĒ²272® with Argon or Air.
- Optional glazing available: LoĒ180™ with Argon or Air, LoĒ 366® with Argon or Air, clear, tints, tempered, obscure and others.

Glazing for Impact Units:

- Glazing seal: the glass is set from the interior against a bead of Rapid Strength Silicone. The perimeter of the glass is backfilled with Rapid Strength Silicon. The interior wood bead is secured to the frame with 1 3/8" (35) brad nails nominal 5" on center.
- Impact glass setting blocks are used to reduce the change of glass sliding.

Min/Max Guidelines and Certified Sizes: Clad Direct Glaze Round Top

Minimum and Maximum Guidelines Direct Glaze Round Tops					
Round Top Shape	**Rough Opening Size**				
	Minimum Size Unit				
	in	**mm**	**×**	**in**	**mm**
True Half RT1	18	(457)	×	9	(229)
Eyebrow above Springline RT6	18	(457)	×	9	(229)
Quarter Round RT7 or RT8	9 1/2	(241)	×	9	(229)
Full Circle RT27	21	(533)	×	21	(533)
Full Ellipse RT28	34	(864)	×	14 1/2	(368)

Glazing Type	**Maximum Rough Opening Size**	
	ft2	**m2**
1" IG RT1 only	61	(5.67)
1" IG All Other Shapes	49	(4.55)
Single Glaze RT1 Only	49	(4.55)
Single Glaze All Other Shapes	38	(3.53)
Glazing Type	Rough Opening Diameter (ft)	mm
RT27 and RT26	8	(2438)

Certified Sizes and Ratings									
Unit Type	**Glass Type**	**Frame Size Height**		**Frame Size Width**					
				in	**mm**	**in**	**mm**	**in**	**mm**
		in	**mm**	**48**	**(1219)**	**84**	**(2134)**	**73**	**(1854)**
Clad Direct Glaze	**Tempered 1/4 SG**	**96**	**(2438)**	-		CW-PG55-FW		-	
Clad IZ3 Direct Glaze	**3.9/9.8/4.7 Tempered**	**73**	**(1854)**	-		-		CW-PG55-FW	
		120	**(3048)**	CW-PG55-FW		-		-	

Measurement Conversions: Clad Direct Glaze Round Top

Not to Scale

Unit Measurements		Width		Height	
From	**To**				
Rough Opening		**in**	**mm**	**in**	**mm**
OM of Frame	Rough Opening	+ 1	(25)	+ 1/2	(13)
Masonry Opening w/out BMC	Rough Opening	+ 1/2	(13)	+ 1/4	(06)
Masonry Opening w/BMC	Rough Opening	-2 1/8	(54)	-1 11/16	(43)
Masonry Opening w/Flat Casing	Rough Opening	-5 1/2	(140)	-3 3/8	(86)
Glass		**in**	**mm**	**in**	**mm**
Daylight Opening	Glass	+ 1 3/8	(35)	+ 1 3/8	(35)

NOTE: These dimensions do not include a subsill.

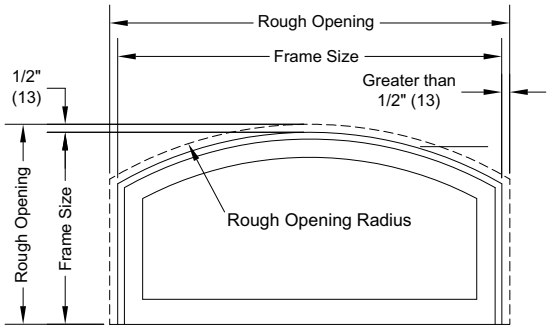

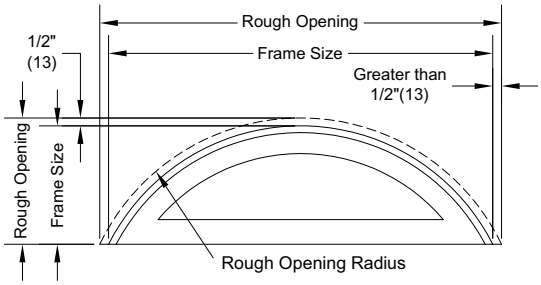

NOTE: On all units, we maintain our clearance or conversion dimension perpendicular to the frame. For this reason, standard rectangular conversions cannot be used for any unit involving a radius or angles. These must be calculated on an individual basis. If any dimension is critical (such as frame OSM to match lower unit) then the order should be placed with that dimension. The order will be converted to the accurate rough openings.

Standard Sizes: Clad Ultimate Glider Direct Glaze, Full Circle and Ellipse Series

Clad Ultimate Glider Direct Glaze Round Tops									
Shape - RT1 - True Half Circle									
CN		**Width**				**Height**			
		Masonry Opening		**Rough Opening**		**Masonry Opening**		**Rough Opening**	
		ft-in	**mm**	**ft-in**	**mm**	**ft-in**	**mm**	**ft-in**	**mm**
CRT	3016	3-0	(914)	3-0 1/2	(927)	1-6	(457)	1-6 1/4	(464)
CRT	4024	4-0	(1219)	4-0 1/2	(1232)	2-0	(610)	2-0 1/4	(616)
CRT	5026	5-0	(1524)	5-0 1/2	(1537)	2-6	(762)	2-6 1/4	(768)
CRT	6030	6-0	(1829)	6-0 1/2	(1842)	3-0	(914)	3-0 1/4	(921)
Shape - RT29 - Elliptical									
CRT	4015	4-0	(1219)	4-0 1/2	(1232)	1-5 11/16	(449)	1-5 15/16	(456)
CRT	5015	5-0	(1524)	5-0 1/2	(1537)	1-5 11/16	(449)	1-5 15/16	(456)
CRT	6015	6-0	(1829)	6-0 1/2	(1842)	1-5 11/16	(449)	1-5 15/16	(456)

Clad Ultimate Glider Direct Glaze Round Tops									
Shape - RT1 - True Half Circle									
CN		**Width**				**Height**			
		Masonry Opening		**Rough Opening**		**Masonry Opening**		**Rough Opening**	
		ft-in	**mm**	**ft-in**	**mm**	**ft-in**	**mm**	**ft-in**	**mm**
CRT	**3016**	3-0	(914)	3-0 1/2	(927)	1-6	(457)	1-6 1/4	(464)
CRT	**4024**	4-0	(1219)	4-0 1/2	(1232)	2-0	(610)	2-0 1/4	(616)
CRT	**5026**	5-0	(1524)	5-0 1/2	(1537)	2-6	(762)	2-6 1/4	(768)
CRT	**6030**	6-0	(1829)	6-0 1/2	(1842)	3-0	(914)	3-0 1/4	(921)
Shape - RT29 - Elliptical									
CRT	**4015**	4-0	(1219)	4-0 1/2	(1232)	1-5 11/16	(449)	1-5 15/16	(456)
CRT	**5015**	5-0	(1524)	5-0 1/2	(1537)	1-5 11/16	(449)	1-5 15/16	(456)
CRT	**6015**	6-0	(1829)	6-0 1/2	(1842)	1-5 11/16	(449)	1-5 15/16	(456)

Standard Sizes: Clad Ultimate Casement True Half, Elliptical and Quarter Circle

Clad Ultimate Casement/Awning Direct Glaze Round Tops									
Shape - RT1 - True Half Circle									
CN		**Width**				**Height**			
		Masonry Opening		**Rough Opening**		**Masonry Opening**		**Rough Opening**	
		ft-in	**mm**	**ft-in**	**mm**	**ft-in**	**mm**	**ft-in**	**mm**
CRT	**2010**	1-8 1/2	(521)	1-9	(533)	0-10 1/4	(260)	0-10 1/2	(267)
CRT	**2412**	2-0 1/2	(622)	2-1	(635)	1-0 1/4	(311)	1-0 1/2	(318)
CRT	**2614**	2-4 1/2	(724)	2-5	(737)	1-2 1/4	(362)	1-2 1/2	(368)
CRT	**3216**	2-8 1/2	(826)	2-9	(838)	1-4 1/4	(413)	1-4 1/2	(419)
CRT	**3618**	3-0 1/2	(927)	3-1	(940)	1-6 1/4	(464)	1-6 1/2	(470)
CRT	**4020**	3-4 1/2	(1029)	3-5	(1041)	1-8 1/4	(514)	1-8 1/2	(521)
CRT	**4824**	4-0 1/2	(1232)	4-1	(1245)	2-0 1/4	(616)	2-0 1/2	(622)
CRT	**5628**	4-8 1/2	(1435)	4-9	(1448)	2-4 1/4	(718)	2-4 1/2	(724)
CRT	**6026**	5-0 1/2	(1537)	5-1	(1549)	2-6 1/4	(768)	2-6 1/2	(775)
CRT	**6432**	5-4 1/2	(1638)	5-5	(1651)	2-8 1/4	(819)	2-8 1/2	(826)
CRT	**7236**	6-0 1/2	(1842)	6-1	(1854)	3-0 1/4	(921)	3-0 1/2	(927)
CRT	**8442**	7-0 1/2	(2146)	7-1	(2159)	3-6 1/4	(1073)	3-6 1/2	(1080)
CRT	**9648**	8-0 1/2	(2451)	8-1	(2464)	4-0 1/4	(1226)	4-0 1/2	(1232)
CRT	**10654**	9-0 1/2	(2756)	9-1	(2769)	4-6 1/4	(1378)	4-6 1/2	(1384)
CRT	**12060**	10-0 1/2	(3061)	10-1	(3073)	5-0 1/4	(1530)	5-0 1/2	(1537)
Shape - RT29 - Elliptical									
CRT	**4017**	3-4 1/2	(1029)	3-5	(1041)	1-5 11/16	(449)	1-5 15/16	(456)
CRT	**4817**	4-0 1/2	(1232)	4-1	(1245)	1-5 11/16	(449)	1-5 15/16	(456)
CRT	**5617**	4-8 1/2	(1435)	4-9	(1448)	1-5 11/16	(449)	1-5 15/16	(456)
CRT	**7217**	6-0 1/2	(1842)	6-1	(1854)	1-5 11/16	(449)	1-5 15/16	(456)
CRT	**8417**	7-0 1/2	(2146)	7-1	(2159)	1-5 11/16	(449)	1-5 15/16	(456)
Shape - RT15,16 - Quarter Circle									
CRT	**2020**	1-8 1/2	(521)	1-9	(533)	1-7 3/8	(492)	1-7 5/8	(498)
CRT	**2424**	2-0 1/2	(622)	2-1	(635)	1-11 3/8	(594)	1-11 5/8	(600)
CRT	**2828**	2-4 1/2	(724)	2-5	(737)	2-3 3/8	(695)	2-3 5/8	(702)
CRT	**3232**	2-8 1/2	(826)	2-9	(838)	2-7 3/8	(797)	2-7 5/8	(803)
CRT	**3636**	3-0 1/2	(927)	3-1	(940)	2-11 3/8	(899)	2-11 5/8	(905)
CRT	**4040**	3-4 1/2	(1029)	3-5	(1041)	3-3 3/8	(1000)	3-3 5/8	(1006)
CRT	**4848**	4-0 1/2	(1232)	4-1	(1245)	3-11 3/8	(1203)	3-11 5/8	(1210)

Standard Sizes: Clad Ultimate Casement Eyebrow Above Springline

Clad Ultimate Casement/Awning Direct Glaze Round Tops Shape - RT6 - Eyebrow Above Springline									
CN		Width				Height			
		Rough Opening		Rough Opening Radius		Rough Opening		Rough Opening Springline	
		ft-in	mm	ft-in	mm	ft-in	mm	ft-in	mm
CRT	**2411**	2-1	(635)	0-0 1/4	(06)	1-0 1/2	(318)	0-9 1/16	(230)
CRT	**2419**	2-1	(635)	0-0 1/4	(06)	1-6 1/2	(470)	1-3 1/16	(383)
CRT	**2423**	2-1	(635)	0-0 1/4	(06)	2-0 1/2	(622)	1-9 1/16	(535)
CRT	**2435**	2-1	(635)	0-0 1/4	(06)	3-0 1/2	(927)	2-9 1/16	(840)
CRT	**2447**	2-1	(635)	0-0 1/4	(06)	4-0 1/2	(1232)	3-9 1/16	(1145)
CRT	**2459**	2-1	(635)	0-0 1/4	(06)	5-0 1/2	(1537)	4-9 1/16	(1449)
CRT	**2471**	2-1	(635)	0-0 1/4	(06)	6-0 1/2	(1842)	5-9 1/16	(1754)
CRT	**2811**	2-5	(737)	0-0 1/4	(06)	1-0 1/2	(318)	0-9 1/16	(230)
CRT	**2819**	2-5	(737)	0-0 1/4	(06)	1-6 1/2	(470)	1-3 1/16	(383)
CRT	**2823**	2-5	(737)	0-0 1/4	(06)	2-0 1/2	(622)	1-9 1/16	(535)
CRT	**2835**	2-5	(737)	0-0 1/4	(06)	3-0 1/2	(927)	2-9 1/16	(840)
CRT	**2847**	2-5	(737)	0-0 1/4	(06)	4-0 1/2	(1232)	3-9 1/16	(1145)
CRT	**2859**	2-5	(737)	0-0 1/4	(06)	5-0 1/2	(1537)	4-9 1/16	(1449)
CRT	**2871**	2-5	(737)	0-0 1/4	(06)	6-0 1/2	(1842)	5-9 1/16	(1754)
CRT	**3211**	2-9	(838)	0-0 1/4	(06)	1-0 1/2	(318)	0-9 1/16	(230)
CRT	**3219**	2-9	(838)	0-0 1/4	(06)	1-6 1/2	(470)	1-3 1/16	(383)
CRT	**3223**	2-9	(838)	0-0 1/4	(06)	2-0 1/2	(622)	1-9 1/16	(535)
CRT	**3235**	2-9	(838)	0-0 1/4	(06)	3-0 1/2	(927)	2-9 1/16	(840)
CRT	**3247**	2-9	(838)	0-0 1/4	(06)	4-0 1/2	(1232)	3-9 1/16	(1145)
CRT	**3259**	2-9	(838)	0-0 1/4	(06)	5-0 1/2	(1537)	4-9 1/16	(1449)
CRT	**3271**	2-9	(838)	0-0 1/4	(06)	6-0 1/2	(1842)	5-9 1/16	(1754)
CRT	**3611**	3-1	(940)	0-0 1/4	(06)	1-0 1/2	(318)	0-9 1/16	(230)
CRT	**3619**	3-1	(940)	0-0 1/4	(06)	1-6 1/2	(470)	1-3 1/16	(383)
CRT	**3623**	3-1	(940)	0-0 1/4	(06)	2-0 1/2	(622)	1-9 1/16	(535)
CRT	**3635**	3-1	(940)	0-0 1/4	(06)	3-0 1/2	(927)	2-9 1/16	(840)
CRT	**3647**	3-1	(940)	0-0 1/4	(06)	4-0 1/2	(1232)	3-9 1/16	(1145)
CRT	**3659**	3-1	(940)	0-0 1/4	(06)	5-0 1/2	(1537)	4-9 1/16	(1449)
CRT	**3671**	3-1	(940)	0-0 1/4	(06)	6-0 1/2	(1842)	5-9 1/16	(1754)
CRT	**4011**	3-5	(1041)	0-0 1/4	(06)	1-0 1/2	(318)	0-9 1/16	(230)
CRT	**4019**	3-5	(1041)	0-0 1/4	(06)	1-6 1/2	(470)	1-3 1/16	(383)
CRT	**4023**	3-5	(1041)	0-0 1/4	(06)	2-0 1/2	(622)	1-9 1/16	(535)
CRT	**4035**	3-5	(1041)	0-0 1/4	(06)	3-0 1/2	(927)	2-9 1/16	(840)
CRT	**4047**	3-5	(1041)	0-0 1/4	(06)	4-0 1/2	(1232)	3-9 1/16	(1145)
CRT	**4059**	3-5	(1041)	0-0 1/4	(06)	5-0 1/2	(1537)	4-9 1/16	(1449)
CRT	**4071**	3-5	(1041)	0-0 1/4	(06)	6-0 1/2	(1842)	5-9 1/16	(1754)

Standard Sizes: Clad Ultimate Casement Eyebrow Above Springline

Clad Ultimate Casement/Awning Direct Glaze Round Tops Shape - RT6 - Eyebrow Above Springline									
CN		Rough Opening		Rough Opening Radius		Rough Opening		Rough Opening Springline	
		ft-in	mm	ft-in	mm	ft-in	mm	ft-in	mm
CRT	**4819**	4-1	(1245)	0-0 1/4	(06)	1-6 1/2	(470)	1-3 1/16	(383)
CRT	**4823**	4-1	(1245)	0-0 1/4	(06)	2-0 1/2	(622)	1-9 1/16	(535)
CRT	**4835**	4-1	(1245)	0-0 1/4	(06)	3-0 1/2	(927)	2-9 1/16	(840)
CRT	**4847**	4-1	(1245)	0-0 1/4	(06)	4-0 1/2	(1232)	3-9 1/16	(1145)
CRT	**4859**	4-1	(1245)	0-0 1/4	(06)	5-0 1/2	(1537)	4-9 1/16	(1449)
CRT	**4871**	4-1	(1245)	0-0 1/4	(06)	6-0 1/2	(1842)	5-9 1/16	(1754)
CRT	**5619**	4-9	(1448)	0-0 1/4	(06)	1-6 1/2	(470)	1-3 1/16	(383)
CRT	**5623**	4-9	(1448)	0-0 1/4	(06)	2-0 1/2	(622)	1-9 1/16	(535)
CRT	**5635**	4-9	(1448)	0-0 1/4	(06)	3-0 1/2	(927)	2-9 1/16	(840)
CRT	**5647**	4-9	(1448)	0-0 1/4	(06)	4-0 1/2	(1232)	3-9 1/16	(1145)
CRT	**5659**	4-9	(1448)	0-0 1/4	(06)	5-0 1/2	(1537)	4-9 1/16	(1449)
CRT	**5671**	4-9	(1448)	0-0 1/4	(06)	6-0 1/2	(1842)	5-9 1/16	(1754)
CRT	**7219**	6-1	(1854)	0-0 1/4	(06)	1-6 1/2	(470)	1-3 1/16	(383)
CRT	**7223**	6-1	(1854)	0-0 1/4	(06)	2-0 1/2	(622)	1-9 1/16	(535)
CRT	**7235**	6-1	(1854)	0-0 1/4	(06)	3-0 1/2	(927)	2-9 1/16	(840)
CRT	**7247**	6-1	(1854)	0-0 1/4	(06)	4-0 1/2	(1232)	3-9 1/16	(1145)
CRT	**7259**	6-1	(1854)	0-0 1/4	(06)	5-0 1/2	(1537)	4-9 1/16	(1449)
CRT	**7271**	6-1	(1854)	0-0 1/4	(06)	6-0 1/2	(1842)	5-9 1/16	(1754)

Standard Sizes: Clad Ultimate Double Hung True Half Circle and Elliptical Direct Glaze

Clad Ultimate Double Hung Direct Glaze Round Tops									
Shape - RT1 - True Half Circle									
CN		**Width**				**Height**			
		Masonry Opening		**Rough Opening**		**Masonry Opening**		**Rough Opening**	
		ft-in	**mm**	**ft-in**	**mm**	**ft-in**	**mm**	**ft-in**	**mm**
CRT	**2914**	2-5 7/8	(759)	2-6 3/8	(772)	1-2 15/16	(379)	1-3 3/16	(386)
CRT	**3115**	2-7 7/8	(810)	2-8 3/8	(822)	1-3 15/16	(405)	1-4 3/16	(411)
CRT	**3316**	2-9 7/8	(860)	2-10 3/8	(873)	1-4 15/16	(430)	1-5 3/16	(437)
CRT	**3517**	2-11 7/8	(911)	3-0 3/8	(924)	1-5 15/16	(456)	1-6 3/16	(462)
CRT	**3718**	3-1 7/8	(962)	3-2 3/8	(975)	1-6 15/16	(481)	1-7 3/16	(487)
CRT	**4120**	3-5 7/8	(1064)	3-6 3/8	(1076)	1-8 15/16	(532)	1-9 3/16	(538)
CRT	**4522**	3-9 7/8	(1165)	3-10 3/8	(1178)	1-10 15/16	(583)	1-11 3/16	(589)
CRT	**5025**	4-3 1/4	(1302)	4-3 3/4	(1314)	2-1 5/8	(651)	2-1 7/8	(657)
CRT	**5828**	4-11 1/4	(1505)	4-11 3/4	(1518)	2-5 5/8	(752)	2-5 7/8	(759)
CRT	**6632**	5-7 1/4	(1708)	5-7 3/4	(1721)	2-9 5/8	(854)	2-9 7/8	(860)
CRT	**7437**	6-3 1/4	(1911)	6-3 3/4	(1924)	3-1 5/8	(956)	3-1 7/8	(962)
Shape - RT29 - Elliptical									
CRT	**5118**	4-3 1/4	(1302)	4-3 3/4	(1314)	1-5 11/16	(449)	1-5 15/16	(456)
CRT	**5918**	4-11 1/4	(1505)	4-11 3/4	(1518)	1-5 11/16	(449)	1-5 15/16	(456)
CRT	**6718**	5-7 1/4	(1708)	5-7 3/4	(1721)	1-5 11/16	(449)	1-5 15/16	(456)
CRT	**7518**	6-3 1/4	(1911)	6-3 3/4	(1924)	1-5 11/16	(449)	1-5 15/16	(456)

Standard Sizes: Clad Ultimate Double Hung - Eyebrow Above Springline

Clad Ultimate Double Hung Direct Glaze Round Tops									
Shape - RT6 - Eyebrow Above Springline									
CN		Width				Height			
		Rough Opening		Rough Opening Radius		Rough Opening		Rough Opening Springline	
		ft-in	mm	ft-in	mm	ft-in	mm	ft-in	mm
CRT	**2511**	2-2 3/8	(670)	2-0 1/2	(622)	1-0 1/2	(318)	0-8 5/8	(219)
CRT	**2519**	2-2 3/8	(670)	2-0 1/2	(622)	1-6 1/2	(470)	1-2 5/8	(371)
CRT	**2523**	2-2 3/8	(670)	2-0 1/2	(622)	2-0 1/2	(622)	1-8 5/8	(524)
CRT	**2535**	2-2 3/8	(670)	2-0 1/2	(622)	3-0 1/2	(927)	2-8 5/8	(829)
CRT	**2547**	2-2 3/8	(670)	2-0 1/2	(622)	4-0 1/2	(1232)	3-8 5/8	(1133)
CRT	**2559**	2-2 3/8	(670)	2-0 1/2	(622)	5-0 1/2	(1537)	4-8 5/8	(1438)
CRT	**2571**	2-2 3/8	(670)	2-0 1/2	(622)	6-0 1/2	(1842)	5-8 5/8	(1743)
CRT	**2911**	2-6 3/8	(772)	2-0 1/2	(622)	1-0 1/2	(318)	0-7 1/4	(183)
CRT	**2919**	2-6 3/8	(772)	2-0 1/2	(622)	1-6 1/2	(470)	1-1 1/4	(336)
CRT	**2923**	2-6 3/8	(772)	2-0 1/2	(622)	2-0 1/2	(622)	1-7 1/4	(488)
CRT	**2935**	2-6 3/8	(772)	2-0 1/2	(622)	3-0 1/2	(927)	2-7 1/4	(793)
CRT	**2947**	2-6 3/8	(772)	2-0 1/2	(622)	4-0 1/2	(1232)	3-7 1/4	(1098)
CRT	**2959**	2-6 3/8	(772)	2-0 1/2	(622)	5-0 1/2	(1537)	4-7 1/4	(1403)
CRT	**2971**	2-6 3/8	(772)	2-0 1/2	(622)	6-0 1/2	(1842)	5-7 1/4	(1707)
CRT	**3111**	2-8 3/8	(822)	2-6 1/2	(775)	1-0 1/2	(318)	0-7 7/8	(200)
CRT	**3119**	2-8 3/8	(822)	2-6 1/2	(775)	1-6 1/2	(470)	1-1 7/8	(352)
CRT	**3123**	2-8 3/8	(822)	2-6 1/2	(775)	2-0 1/2	(622)	1-7 7/8	(505)
CRT	**3135**	2-8 3/8	(822)	2-6 1/2	(775)	3-0 1/2	(927)	2-7 7/8	(810)
CRT	**3147**	2-8 3/8	(822)	2-6 1/2	(775)	4-0 1/2	(1232)	3-7 7/8	(1114)
CRT	**3159**	2-8 3/8	(822)	2-6 1/2	(775)	5-0 1/2	(1537)	4-7 7/8	(1419)
CRT	**3171**	2-8 3/8	(822)	2-6 1/2	(775)	6-0 1/2	(1842)	5-7 7/8	(1724)
CRT	**3311**	2-10 3/8	(873)	2-6 1/2	(775)	1-0 1/2	(318)	0-7 3/16	(183)
CRT	**3319**	2-10 3/8	(873)	2-6 1/2	(775)	1-6 1/2	(470)	1-1 3/16	(335)
CRT	**3323**	2-10 3/8	(873)	2-6 1/2	(775)	2-0 1/2	(622)	1-7 3/16	(487)
CRT	**3335**	2-10 3/8	(873)	2-6 1/2	(775)	3-0 1/2	(927)	2-7 3/16	(792)
CRT	**3347**	2-10 3/8	(873)	2-6 1/2	(775)	4-0 1/2	(1232)	3-7 3/16	(1097)
CRT	**3359**	2-10 3/8	(873)	2-6 1/2	(775)	5-0 1/2	(1537)	4-7 3/16	(1402)
CRT	**3371**	2-10 3/8	(873)	2-6 1/2	(775)	6-0 1/2	(1842)	5-7 3/16	(1707)
CRT	**3511**	3-0 3/8	(924)	2-6 1/2	(775)	1-0 1/2	(318)	0-6 1/2	(165)
CRT	**3519**	3-0 3/8	(924)	2-6 1/2	(775)	1-6 1/2	(470)	1-0 1/2	(318)
CRT	**3523**	3-0 3/8	(924)	2-6 1/2	(775)	2-0 1/2	(622)	1-6 1/2	(470)
CRT	**3535**	3-0 3/8	(924)	2-6 1/2	(775)	3-0 1/2	(927)	2-6 1/2	(775)
CRT	**3547**	3-0 3/8	(924)	2-6 1/2	(775)	4-0 1/2	(1232)	3-6 1/2	(1080)
CRT	**3559**	3-0 3/8	(924)	2-6 1/2	(775)	5-0 1/2	(1537)	4-6 1/2	(1384)
CRT	**3571**	3-0 3/8	(924)	2-6 1/2	(775)	6-0 1/2	(1842)	5-6 1/2	(1689)
CRT	**3711**	3-2 3/8	(975)	3-4 1/2	(1029)	1-0 1/2	(318)	0-7 11/16	(195)
CRT	**3719**	3-2 3/8	(975)	3-4 1/2	(1029)	1-6 1/2	(470)	1-1 11/16	(348)
CRT	**3723**	3-2 3/8	(975)	3-4 1/2	(1029)	2-0 1/2	(622)	1-7 11/16	(500)
CRT	**3735**	3-2 3/8	(975)	3-4 1/2	(1029)	3-0 1/2	(927)	2-7 11/16	(805)

Standard Sizes: Clad Ultimate Double Hung - Eyebrow Above Springline

Clad Ultimate Double Hung Direct Glaze Round Tops									
Shape - RT6 - Eyebrow Above Springline									
CN		Rough Opening		Rough Opening Radius		Rough Opening		Rough Opening Springline	
		ft-in	mm	ft-in	mm	ft-in	mm	ft-in	mm
CRT	**3747**	3-2 3/8	(975)	3-4 1/2	(1029)	4-0 1/2	(1232)	3-7 11/16	(1110)
CRT	**3759**	3-2 3/8	(975)	3-4 1/2	(1029)	5-0 1/2	(1537)	4-7 11/16	(1414)
CRT	**3771**	3-2 3/8	(975)	3-4 1/2	(1029)	6-0 1/2	(1842)	5-7 11/16	(1719)
CRT	**4111**	3-6 3/8	(1076)	3-4 1/2	(1029)	1-0 1/2	(318)	0-6 1/2	(165)
CRT	**4119**	3-6 3/8	(1076)	3-4 1/2	(1029)	1-6 1/2	(470)	1-0 1/2	(318)
CRT	**4123**	3-6 3/8	(1076)	3-4 1/2	(1029)	2-0 1/2	(622)	1-6 1/2	(470)
CRT	**4135**	3-6 3/8	(1076)	3-4 1/2	(1029)	3-0 1/2	(927)	2-6 1/2	(775)
CRT	**4147**	3-6 3/8	(1076)	3-4 1/2	(1029)	4-0 1/2	(1232)	3-6 1/2	(1080)
CRT	**4159**	3-6 3/8	(1076)	3-4 1/2	(1029)	5-0 1/2	(1537)	4-6 1/2	(1384)
CRT	**4171**	3-6 3/8	(1076)	3-4 1/2	(1029)	6-0 1/2	(1842)	5-6 1/2	(1689)
CRT	**4519**	3-10 3/8	(1178)	3-4 1/2	(1029)	1-6 1/2	(470)	0-11 1/4	(285)
CRT	**4523**	3-10 3/8	(1178)	3-4 1/2	(1029)	2-0 1/2	(622)	1-5 1/4	(437)
CRT	**4535**	3-10 3/8	(1178)	3-4 1/2	(1029)	3-0 1/2	(927)	2-5 1/4	(742)
CRT	**4547**	3-10 3/8	(1178)	3-4 1/2	(1029)	4-0 1/2	(1232)	3-5 1/4	(1047)
CRT	**4559**	3-10 3/8	(1178)	3-4 1/2	(1029)	5-0 1/2	(1537)	4-5 1/4	(1352)
CRT	**4571**	3-10 3/8	(1178)	3-4 1/2	(1029)	6-0 1/2	(1842)	5-5 1/4	(1657)
CRT	**5119**	4-3 3/4	(1314)	3-4 1/2	(1029)	1-6 1/2	(470)	0-9 3/16	(233)
CRT	**5123**	4-3 3/4	(1314)	3-4 1/2	(1029)	2-0 1/2	(622)	1-3 3/16	(385)
CRT	**5135**	4-3 3/4	(1314)	3-4 1/2	(1029)	3-0 1/2	(927)	2-3 3/16	(690)
CRT	**5147**	4-3 3/4	(1314)	3-4 1/2	(1029)	4-0 1/2	(1232)	3-3 3/16	(995)
CRT	**5159**	4-3 3/4	(1314)	3-4 1/2	(1029)	5-0 1/2	(1537)	4-3 3/16	(1299)
CRT	**5171**	4-3 3/4	(1314)	3-4 1/2	(1029)	6-0 1/2	(1842)	5-3 3/16	(1604)
CRT	**5919**	4-11 3/4	(1518)	4-6 1/2	(1384)	1-6 1/2	(470)	0-9 9/16	(243)
CRT	**5923**	4-11 3/4	(1518)	4-6 1/2	(1384)	2-0 1/2	(622)	1-3 9/16	(395)
CRT	**5935**	4-11 3/4	(1518)	4-6 1/2	(1384)	3-0 1/2	(927)	2-3 9/16	(700)
CRT	**5947**	4-11 3/4	(1518)	4-6 1/2	(1384)	4-0 1/2	(1232)	3-3 9/16	(1005)
CRT	**5959**	4-11 3/4	(1518)	4-6 1/2	(1384)	5-0 1/2	(1537)	4-3 9/16	(1310)
CRT	**5971**	4-11 3/4	(1518)	4-6 1/2	(1384)	6-0 1/2	(1842)	5-3 9/16	(1614)
CRT	**6719**	5-7 3/4	(1721)	6-0 1/2	(1537)	1-6 1/2	(470)	0-10 1/8	(257)
CRT	**6723**	5-7 3/4	(1721)	6-0 1/2	(1537)	2-0 1/2	(622)	1-4 1/8	(410)
CRT	**6735**	5-7 3/4	(1721)	6-0 1/2	(1537)	3-0 1/2	(927)	2-4 1/8	(714)
CRT	**6747**	5-7 3/4	(1721)	6-0 1/2	(1537)	4-0 1/2	(1232)	3-4 1/8	(1019)
CRT	**6759**	5-7 3/4	(1721)	6-0 1/2	(1537)	5-0 1/2	(1537)	4-4 1/8	(1324)
CRT	**6771**	5-7 3/4	(1721)	6-0 1/2	(1537)	6-0 1/2	(1842)	5-4 1/8	(1629)
CRT	**7519**	6-3 3/4	(1924)	6-0 1/2	(1537)	1-6 1/2	(470)	0-7 13/16	(198)
CRT	**7523**	6-3 3/4	(1924)	6-0 1/2	(1537)	2-0 1/2	(622)	1-1 13/16	(351)
CRT	**7535**	6-3 3/4	(1924)	6-0 1/2	(1537)	3-0 1/2	(927)	2-1 13/16	(656)
CRT	**7547**	6-3 3/4	(1924)	6-0 1/2	(1537)	4-0 1/2	(1232)	3-1 13/16	(960)
CRT	**7559**	6-3 3/4	(1924)	6-0 1/2	(1537)	5-0 1/2	(1537)	4-1 13/16	(1265)
CRT	**7571**	6-3 3/4	(1924)	6-0 1/2	(1537)	6-0 1/2	(1842)	5-1 13/16	(1570)

Section Details: Clad Direct Glaze Round Top

Scale: 3' = 1' 0"

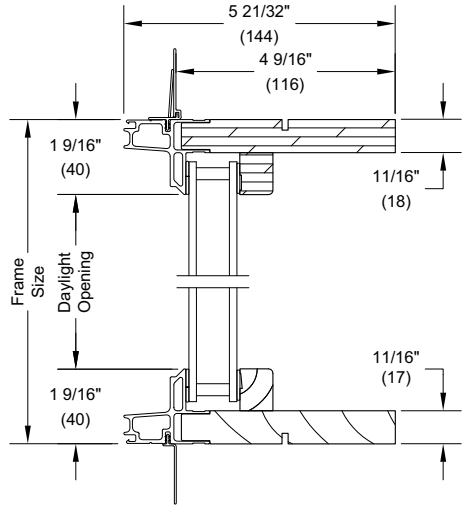

Head Jamb and Sill

Insulating Glass

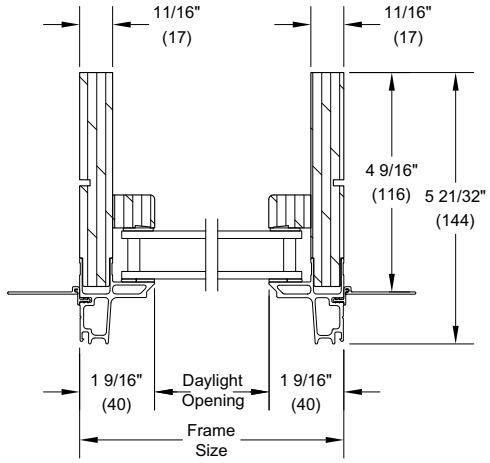

Jambs

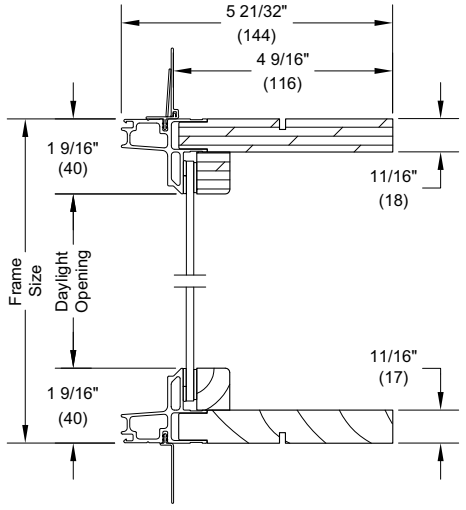

Head Jamb and Sill

Single Glaze

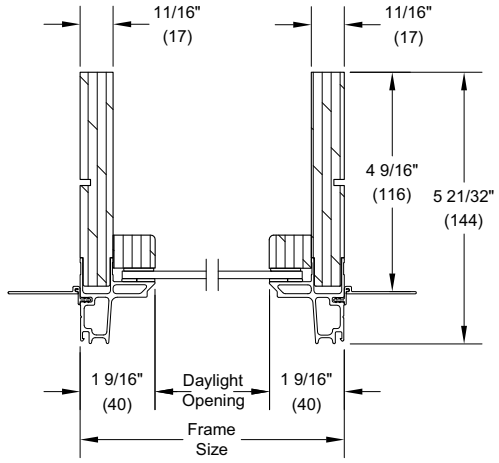

Jambs

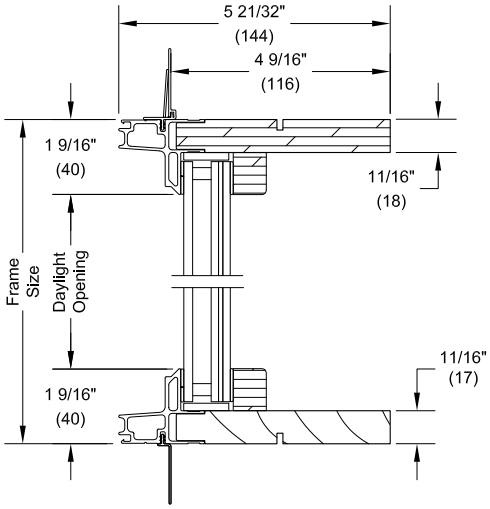

Head Jamb and Sill

Impact Zone 3 - Impact Glass

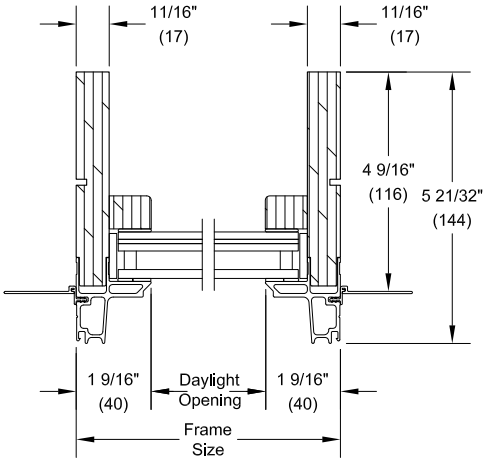

Jambs

Section Details: Clad Direct Glaze Round Top Mullion Options

Scale: 3' = 1' 0"

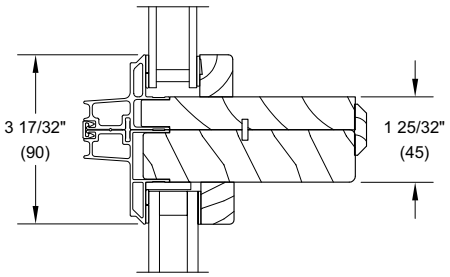

Clad Direct Glaze Round Top
Over Clad Polygon

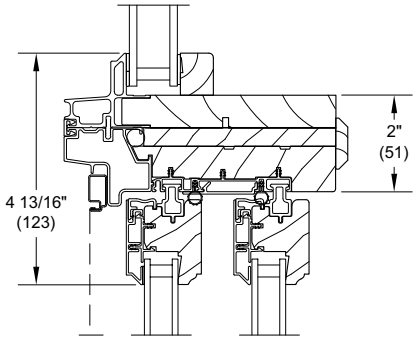

Clad Direct Glaze Round Top
Over Clad Ultimate Glider

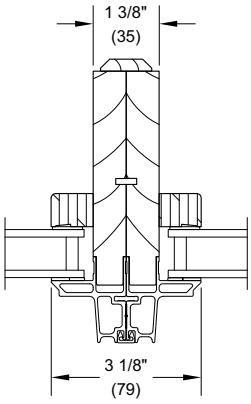

Vertical Mullion
(below Springline)

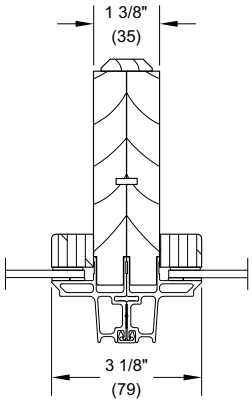

Vertical Mullion
(below Springline)

Clad Direct Glaze Round Top Shape Reference

Scale: 3' = 1' 0"

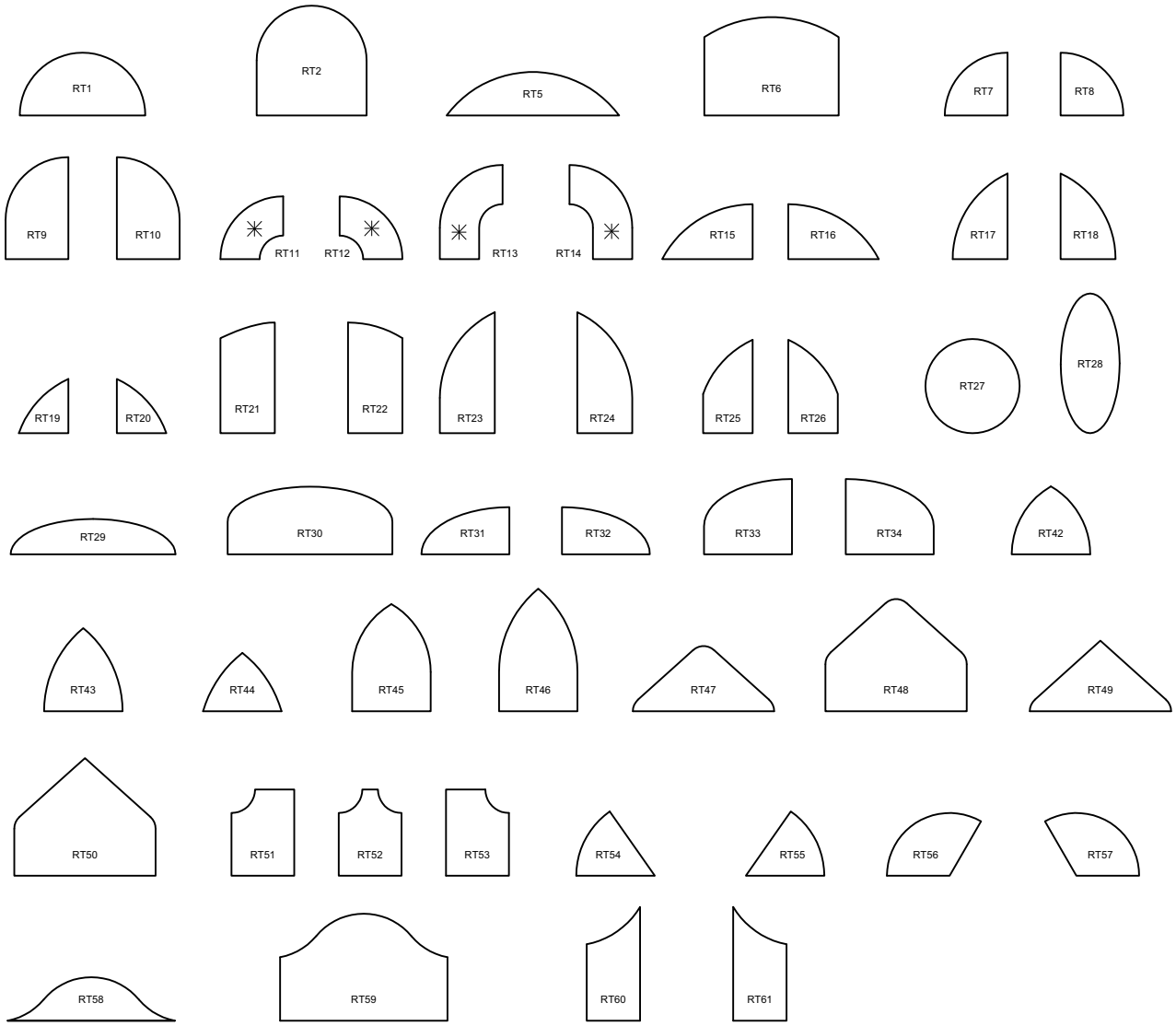

NOTE: For RT11, RT12, RT13 or RT14, please contact your Marvin representative for limitations.

Section Details: Casing Options - Direct Set Polygon and Direct Set Round Top

Scale: 3' = 1' 0"

Clad Direct Glaze Polygon

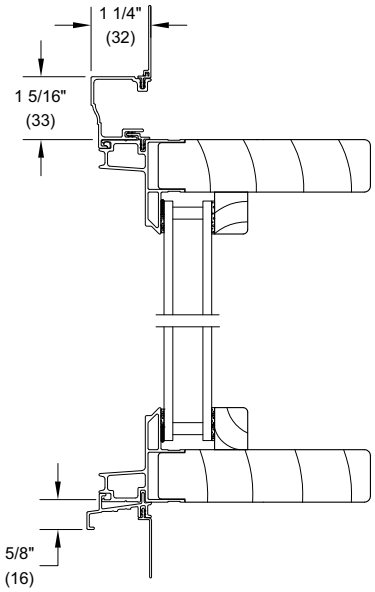

Head Jamb and Sill
with Clad Brick Mould Casing

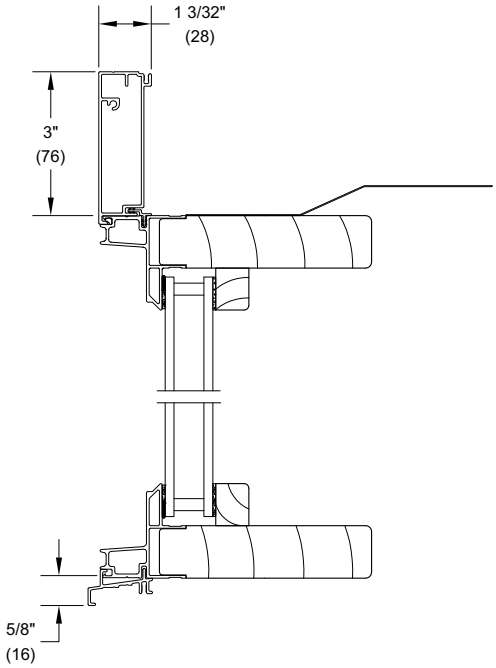

Head Jamb and Sill
with Clad Flat Casing

Clad Direct Glaze Round Top

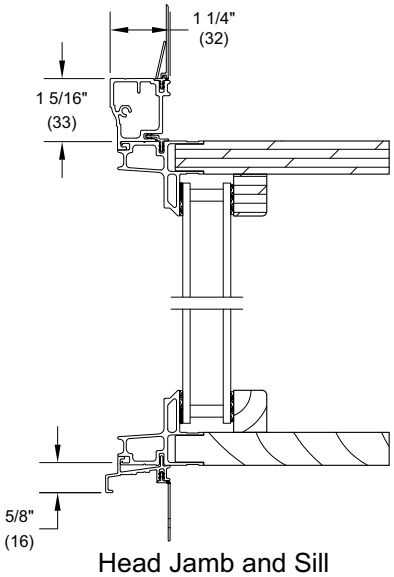

Head Jamb and Sill
with Clad Brick Mould Casing

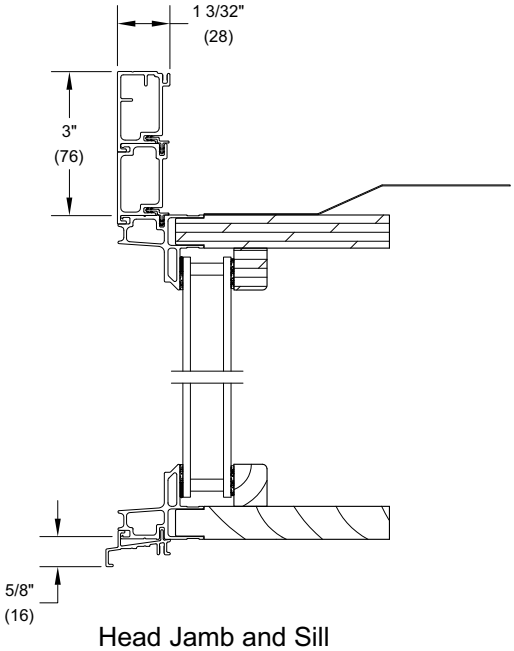

Head Jamb and Sill
with Clad Flat Casing

Direct Glaze Polygon and Direct Set Round Top - Insulated Glass Divided Lite Options

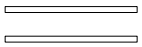

Insulating Glass

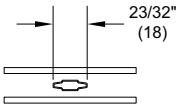

Aluminum 11/16"
Contour GBG

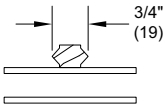

3/4" Grille

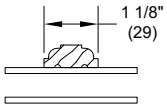

1 1/8" Grille

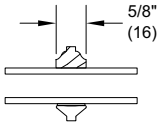

5/8" SDL

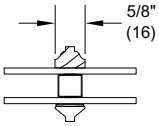

5/8" SDL
W/Spacer

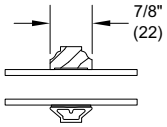

7/8" SDL

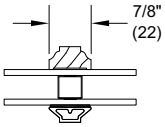

7/8" SDL
W/Spacer Bar

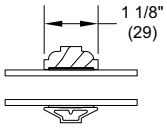

1 1/8" SDL

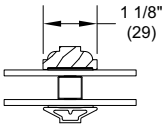

1 1/8" SDL
W/Spacer Bar

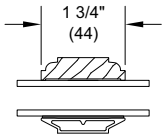

1 3/4" SDL

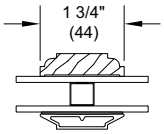

1 3/4" SDL
W/One Spacer Bar

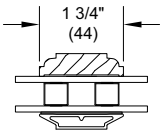

1 3/4" SDL
W/Two Spacer Bars

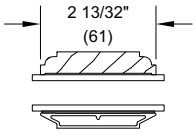

2 13/32" SDL

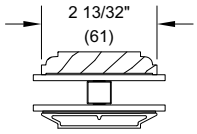

2 13/32" SDL
W/One Spacer Bar

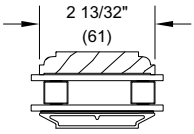

2 13/32" SDL
W/Two Spacer Bar

Direct Glaze Polygon and Direct Set Round Top - Insulated Glass Square SDL Option

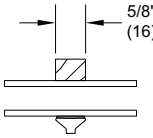

5/8" SDL

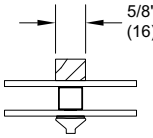

5/8" SDL
W/Spacer

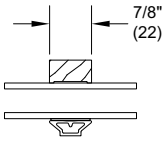

7/8" SDL

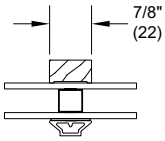

7/8" SDL
W/Spacer Bar

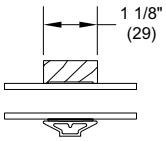

1 1/8" SDL

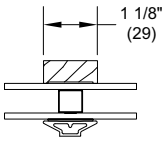

1 1/8" SDL
W/Spacer Bar

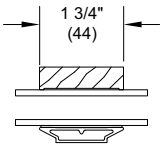

1 3/4" SDL

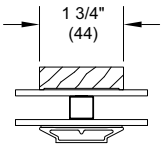

1 3/4" SDL
W/One Spacer Bar

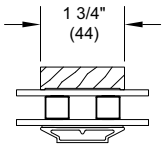

1 3/4" SDL
W/Two Spacer Bars

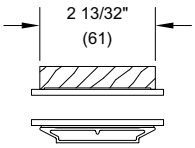

2 13/32" SDL

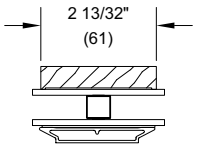

2 13/32" SDL
W/One Spacer Bar

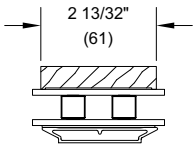

2 13/32" SDL
W/Two Spacer Bar