Screen Replacement Installation Instructions

NOTE: This screen utilizes casing mounted receptacles and spring loaded plunger bolts to hold the screen in place. If your window is not prepared for this screen mounting system, the following procedure is recommended.

Parts List

4 – mounting receptacles Screen

YOU WILL NEED TO SUPPLY

Drill with 3/8″ drill bit Marker or chalk

1. Mark top casing for receptacle by applying chalk or marker ink to the tip of the pins. Place screen against head casing to mark pin locations. See illustration 1.
2. With a 3/8″ diameter drill bit, drill a hole at least 5/16″ deep in the casing, mark as close to the blindstop as possible. Insert receptacles into holes. See illustration 1.
3. With screen in place at top, repeat step 1 by marking the tip of the plunger bolts on side casing. See illustration 2.
4. Drill hole the same as in step 2 and insert receptacle. See illustration 2.

Steps 3 and 4 must be done on both sides of unit. Screen is now ready to be put in place.

5. Place top pins into head casing receptacles, retract side pins and pull screen into place, release pins and check to be sure they are engaged in the receptacles.

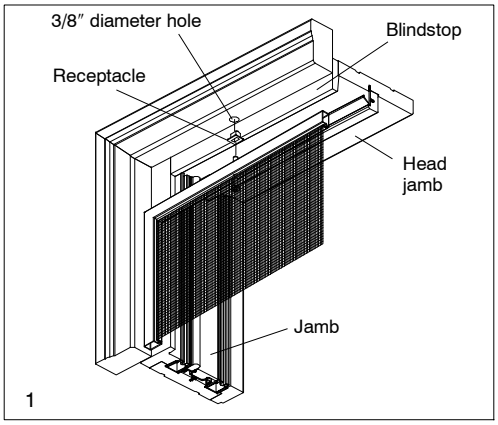

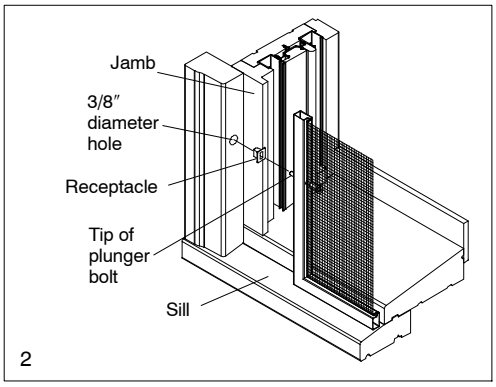

11708199 2009-12-08

Screen Replacement Installation Instructions

NOTE: This screen utilizes casing mounted receptacles and spring loaded plunger bolts to hold the screen in place. If your window is not prepared for this screen mounting system, the following procedure is recommended.

Parts List

4 – mounting receptacles Screen

YOU WILL NEED TO SUPPLY

Drill with 3/8″ drill bit Marker or chalk

1. Mark top casing for receptacle by applying chalk or marker ink to the tip of the pins. Place screen against head casing to mark pin locations. See illustration 1.
2. With a 3/8″ diameter drill bit, drill a hole at least 5/16″ deep in the casing, mark as close to the blindstop as possible. Insert receptacles into holes. See illustration 1.
3. With screen in place at top, repeat step 1 by marking the tip of the plunger bolts on side casing. See illustration 2.
4. Drill hole the same as in step 2 and insert receptacle. See illustration 2.

Steps 3 and 4 must be done on both sides of unit. Screen is now ready to be put in place.

5. Place top pins into head casing receptacles, retract side pins and pull screen into place, release pins and check to be sure they are engaged in the receptacles.

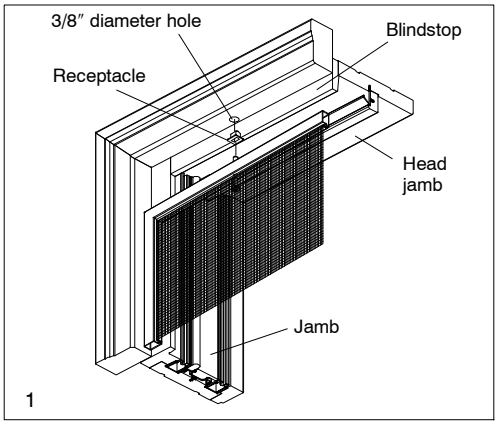

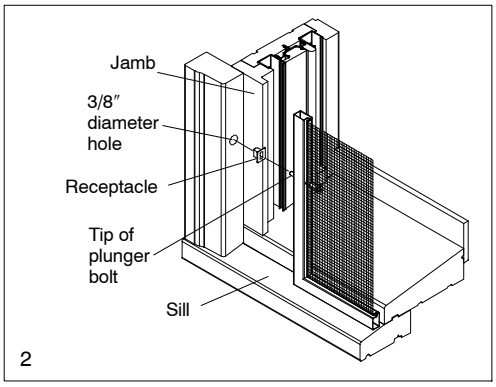

11708199 2009-12-08