Wood Magnum Double Hung / Single Hung

Installation and Finishing Instructions

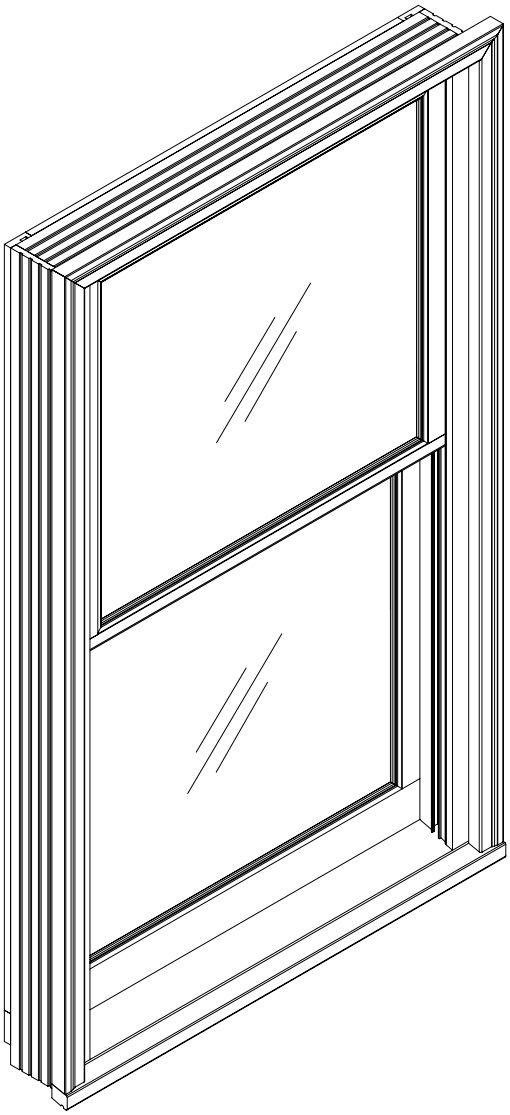

MARVIN Windows and Doors

Made for you.®

11/24/2004
19970673

Before You Begin

- Read these instructions thoroughly ***BEFORE*** beginning to install your Marvin window or door product.
- Regional standard practices, environmental conditions and codes may vary. Identify and follow local regulations and standard practices when they exceed the enclosed procedures. The responsibility for compliance is yours; the installer, inspector and owner(s).
- Plan sizing of rough opening and clearance from exterior finishing systems to allow for normal materials shrinkage or shifting. (e.g. wood structure with brick veneer; allow adequate clearance at sill.) Failure to do so can void the Marvin warranty coverage.
- All windows and doors must be properly flashed and/or sealed at exterior perimeter. Materials used must meet all codes and be compatible with building exterior and window/door surfaces.
- It is the responsibility of the builder, installer and subcontractors to protect the interior and exterior of windows/doors from excessive contact with harsh chemical washes, construction material contamination and moisture. Damage to glazing, hardware, weatherstrip and cladding/wood can occur. Protect with painters tape and/or protective sheathing as required. Follow all guidelines regarding material use, preparation, personal safety and disposal.
- Alterations to Marvin products including window films, insulating or reflective interior window treatments or additional glazings can cause excessive heat buildup and/or condensation. This may lead to premature failures not covered under warranty by Marvin Windows and Doors.
- When preparing to finish the exterior of wood windows and doors fill all nail holes and staple holes with wood filler. Follow all guidelines enclosed (after warranty) and by others (from materials used) to prepare and finish.

WARNING: Practice safety! Wear safety glasses or goggles and appropriate hearing protection when installing or performing adjustments to a Marvin window or door product.

NOTE TO THE INSTALLER AND SUBCONTRACTORS:

Always provide a copy of these instructions to the current (or future) building owner.

Failure to follow the above recommendations and any other specific warnings, procedures for use, safety recommendations and standard construction practices can result in personal injury, poor product performance, premature failure and unnecessary call backs.

Contact your Marvin supplier if you have any questions regarding product and materials used in manufacturing. Before purchasing or applying any product that may affect the installation or performance of Marvin windows and doors contact the manufacturer of aftermarket product/glazings that are not supplied by Marvin and request written product use, associated warranties and damage coverage. Provide this information and warranties to the end user and/or building owner for future reference.

Thank you for your time and attention to detail. Questions? Contact your Marvin dealer or visit us at www.marvin.com.

INDEX

	Page
Rough and Masonry Opening Requirements	1
Rough Opening Preparation – Air Barrier	2
Rough Opening Preparation – Building Paper	2
Installing the Window	3
Sealing the Installation – Air Barrier	5
Sealing the Installation – Building Paper	6
Final Sealing Procedures	7
Tilt Feature Operation	7
Removing Magnum Double Hung Sash	7
Installing Magnum Double Hung Sash	8
Removing Combination Panels and Screens	8
Installing Combination Panels and Screens	8
Interior Finishing Guidelines	9

YOU WILL NEED TO SUPPLY

Safety glasses	Level
Square	Drip cap
Tape measure	Flashing
Hearing protection	Hammer
Shims	Fiberglass insulation
16d casing nails	Interior trim or casing
Utility Knife	Caulking gun
Perimeter sealant[1]	Low expansion foam insulation[2]

Backing material (foam backing rod)
Seam seal tape (air barrier applications)
Flexible self sealing adhesive panning material
Self sealing adhesive flashing
Grade NS Class 25 sealant per ASTM C920. *Sealant must be compatible with building exterior and window/door surfaces.*

REPLACEMENT PARTS

If replacement of parts ever becomes necessary, please contact your local Marvin Windows and Doors dealer.

NOTE: Numbers listed in parentheses ( ) are metric equivalents in millimeters rounded to the nearest whole number.

ATTENTION: Specifications and technical data are subject to change without notice.

ATTENTION: If chemically treated lumber is used for buck material, fasteners into the buck must be a minimum of 0.90 OZ/SQ FT zinc hot dipped galvanized or stainless steel type 304 or 316.

ROUGH AND MASONRY OPENING REQUIREMENTS

1. **Rough openings (RO)** should be 1" (25) wider than the outside measurement of the frame and 1/2" (13) higher. **Masonry openings (MO)** should be 1/2" wider than the outside measurement of the frame and casing and 1/4" (6) higher than the outside measurement of the frame or casing. When framing rough opening, care should be taken to ensure the sill plate is level and the opening is square, straight and plumb.

IMPORTANT! If the previous conditions are not met, the installer must take corrective actions to alter the opening(s) before proceeding. It is also essential that the sheathing behind the wall be a solid surface to ensure that the unit can be secured firmly to the wall.

[1] Sealant must be Grade NS Class 25 per ASTM C920 and compatible with door product and the finished exteriors of the building.
[2] Use low expansion foam insulation only. Must comply with ASTM E2112, section 5.9.2.

ROUGH OPENING PREPARATION - AIR BARRIER

NOTE: The following procedures outline the recommended method to prepare the rough opening for construction applications using a continuous air barrier system. For construction applications using building paper skip to the section, "Rough Opening Preparation-Building Paper".

2. When trimming away the air barrier at openings, first cut across the top of the rough opening the entire width of the head jamb. Then cut from the bottom corners at 45 degree angles toward the center of the opening. Where the angled cuts meet, continue the cut vertically to the head jamb. Cut the top corners diagonally away from the opening. See illustration 1. **DO NOT cut air barrier diagonally from corner to corner in an "X" fashion.**

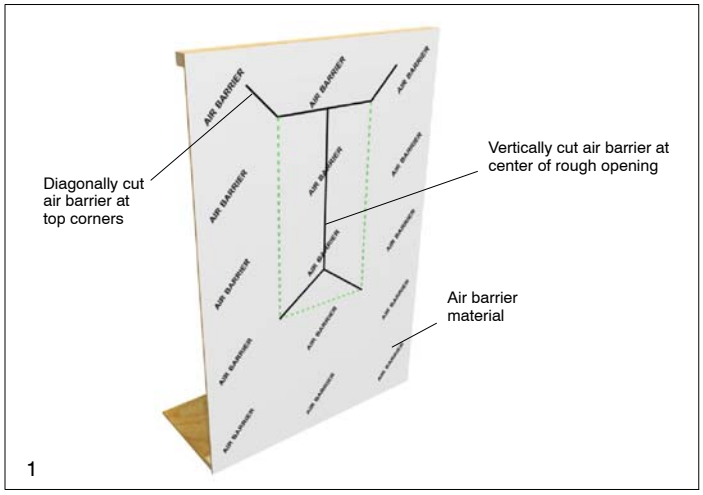

3. Wrap barrier to the interior and tack in place. Do not tack barrier at head jamb. Fold the flap up and tack in place or tuck beneath. This will allow the top flap to fit over the head jamb flashing after installation. See illustration 2.

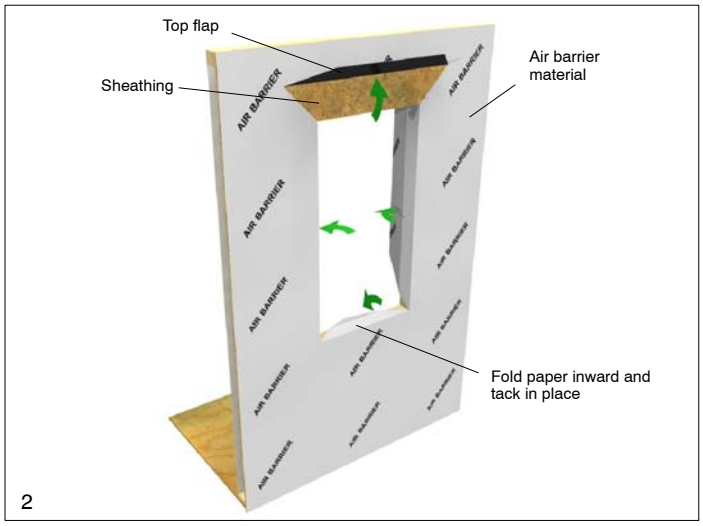

4. Use appropriate width flexible self sealing adhesive membrane to pan the sill. Make the piece long enough to ride up the jambs at least 4″ (102) on each side. Fold the wrap out onto the exterior as shown in illustration 3. Staple the exterior corners of the sill panning to hold the wrap in place until the adhesive cures.

NOTE ON PANNING THE SILL: If a flexible adhesive membrane is not used to pan the sill, be sure to properly seal the bottom corners of the rough opening. Then use regular adhesive membrane along with relief cuts to properly pan the sill. If pan flashing is to be used, install now.

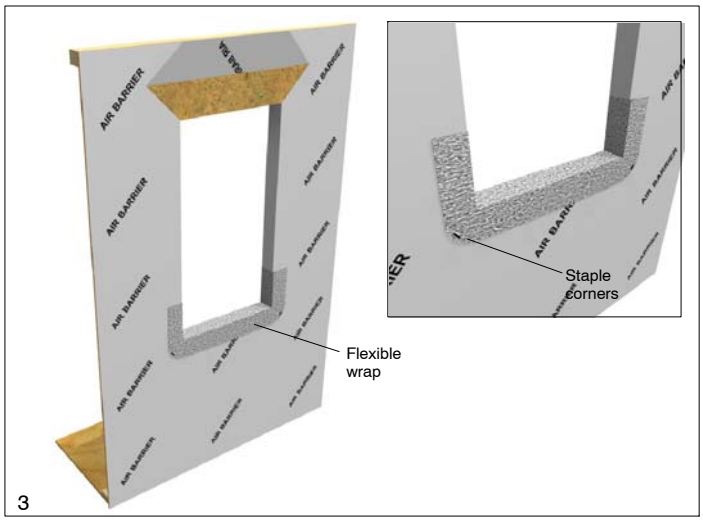

5. Apply a continuous bead of sealant[1] 3/4″ (19) from the top and sides of the window opening. **Do not apply sealant to rough opening bottom.** See illustration 4. Proceed to the **"Installing the Window"** section.

NOTE ON UNITS WITH CASING: For units with casing, apply the sealant where the casing or casing flange will contact the sheathing.

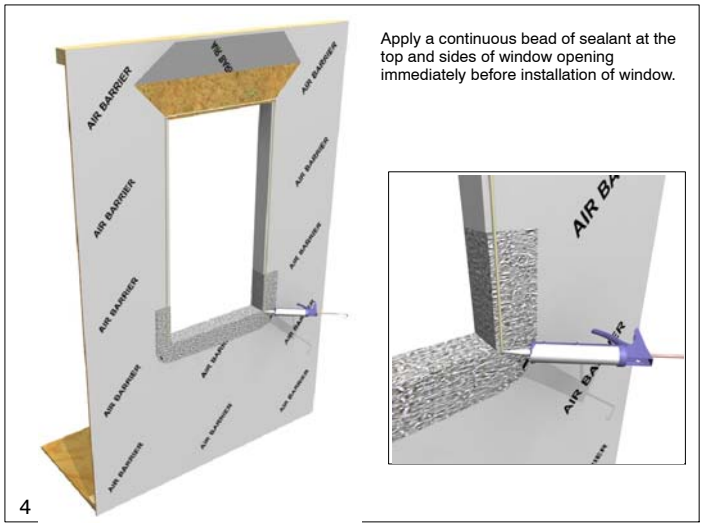

ROUGH OPENING PREPARATION - BUILDING PAPER

NOTE ON BUILDING PAPER APPLICATIONS: Apply the main courses of building paper after the window has been installed.

6. Cut a 9″ (229) wide strip of building paper approximately 24″ (610) longer than the window rough opening width. Center the strip at the sill even with the bottom of the rough opening and staple along the top edge only. See illustration 5.

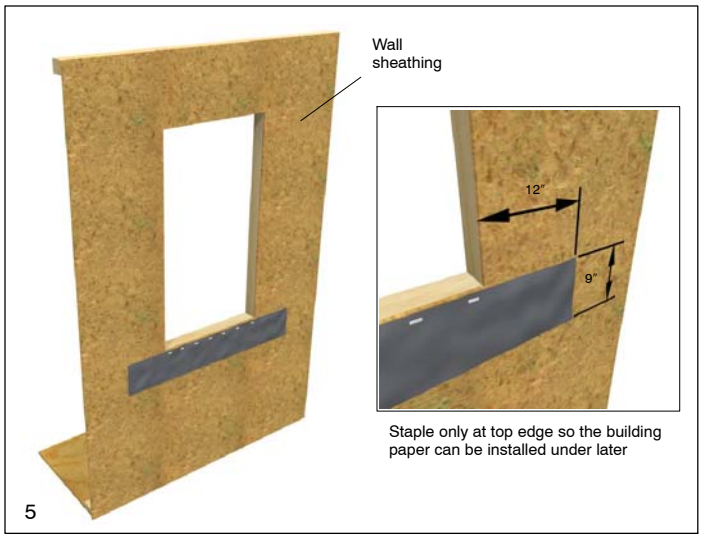

7. Use appropriate width flexible self sealing adhesive membrane to pan the sill. Make the piece long enough to ride up the jambs at least 4″ (102) on each side. Fold the wrap out onto the exterior as shown in illustration 6. Staple exterior corners of the sill panning to hold the wrap in place until the adhesive cures.

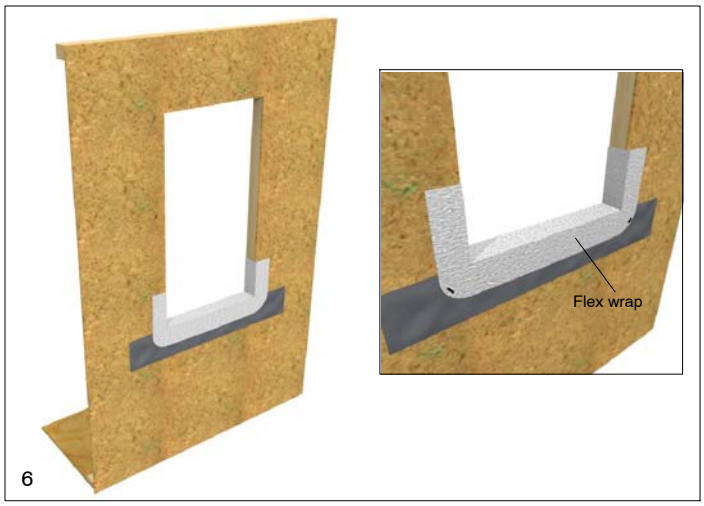

NOTE ON PANNING THE SILL: If a flexible adhesive membrane is not used to pan the sill, be sure to properly seal the bottom corners of the rough opening. Then use regular adhesive membrane along with relief cuts to properly pan the sill. If pan flashing is to be used, install now.

8. Cut a 13″ (330) piece of Grade "D" building paper 24″ longer than the rough opening height (adjust width for jamb depth). Tack the pieces in place overlapping the rough opening by as much as the jamb depth. Use a utility knife to cut the paper even at the head jamb and sill then tack in place. See illustration 7.

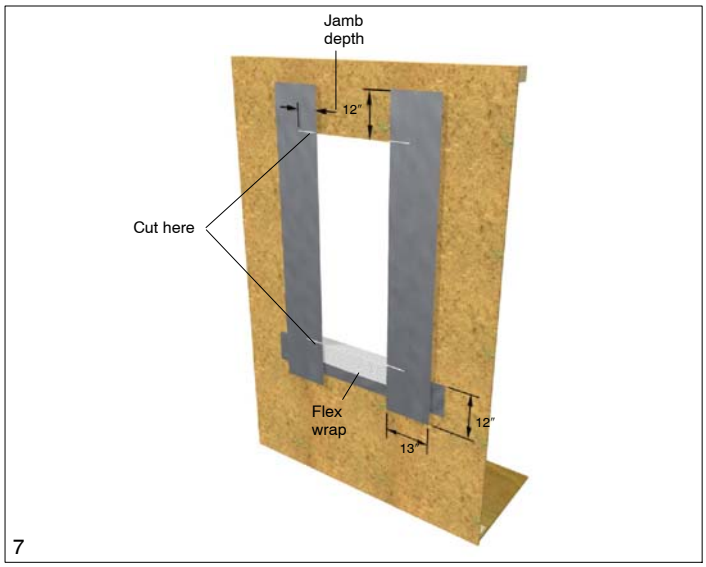

9. Apply a continuous bead of sealant[1] 3/4″ (19) from the top and sides of the window opening. Do not apply sealant to rough opening bottom. See illustration 8.

NOTE ON UNITS WITH CASING: For units with casing, apply the sealant where the casing or casing flange will contact the sheathing.

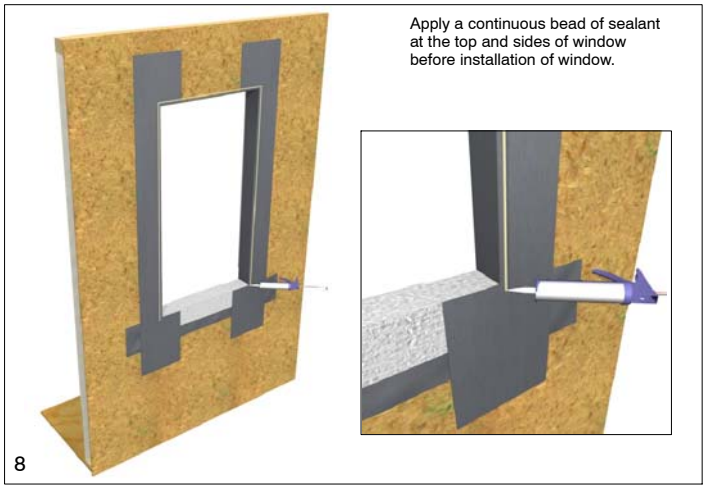

INSTALLING THE WINDOW

NOTE: If installing utilizing masonry clips, install prior to unit installation. Masonry clips must use 2 screws per clip to attach to unit. Apply clips to the jambs and head jamb of unit, minimum of 2 per side attached with #7 X 5/8″ screws 6″ (152) from each corner with all others evenly spaced a maximum of 15″ (381) on center. Instructions included with the clips provide further detail.

10. Before installing your Double Hung or Single Hung unit into the rough opening be sure to apply sealant along the sill horn, jambs and head jamb where the casings make contact. Also apply sealant to casing joints at top corners. See illustration 9.

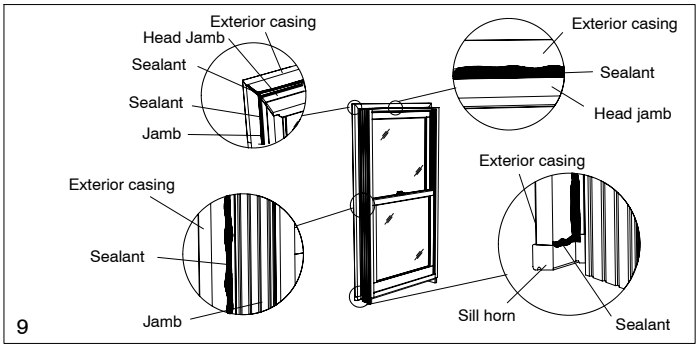

11. Place unit into RO. It is important that you level horizontally from jamb to jamb, at head jamb and sill of unit. Shim under the sill beneath the jambs if needed. Be sure to plumb vertically in relation to the stud wall. See illustration 10.

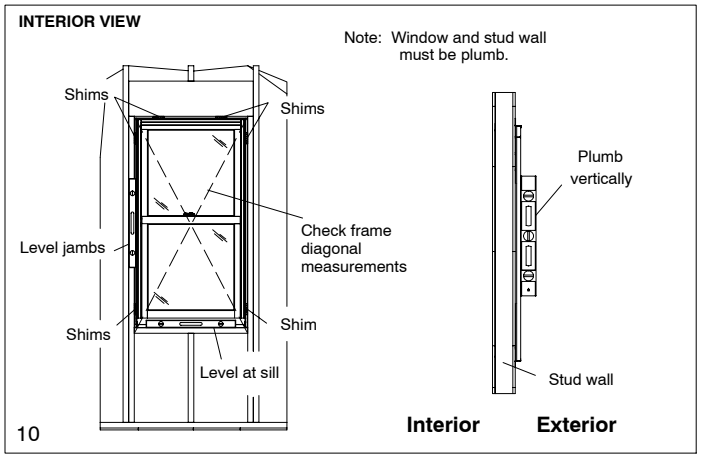

12. Square frame by taking diagonal measurements. See illustration 10. Adjust window frame by applying shims to the corners 4″–6″ from the sill and head jamb. See illustration 10. Also, place shims directly under the mulls on multiple units and at the center of sills on wide units. See illustration 11.

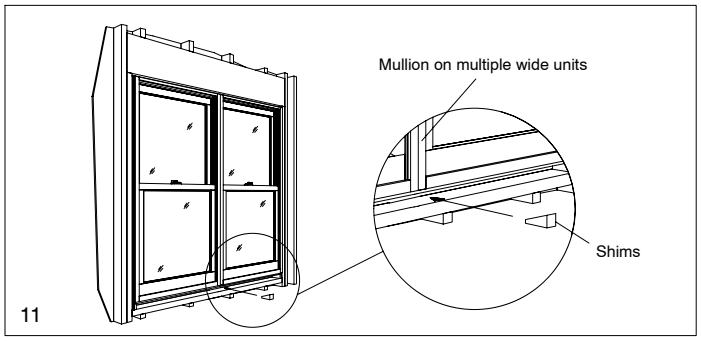

13. Recheck diagonal measurements again. If square, apply shims between side jambs and rough opening at the checkrail area. Add shims between those already installed, space 15″ (381) apart (maximum) along the head/side jambs. **DO NOT OVER SHIM.** Check head/side jambs to be sure they are straight. See illustration 12.

NOTE: Proper shimming is extremely important. Under or over shimming will result in bowed jambs and/or head jamb. Both conditions can contribute to improper operation of the sash.

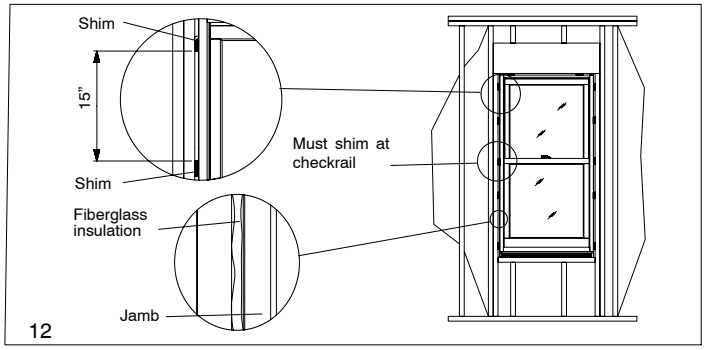

IMPORTANT: The matrix listed below shows the installation methods that are recommended for the Wood Magnum Double Hung (WMDH) and Wood Magnum Single Hung (WMSH) products. Choose the one that best fits your application and follow the steps provided.

Product Type	Brick Mould Casing	Jamb Screw	Masonry Clips
WMDH	X	X	X
WMSH	X	X	X

14. **For units utilizing Brick Mould Casing (BMC) nailing:** Once the unit has been properly shimmed, plumbed and squared finish securing the frame in opening by nailing around the remaining perimeter of BMC 10″ (254) maximum on center with 16d casing nails, minimum of 2 per side. See illustration 13.

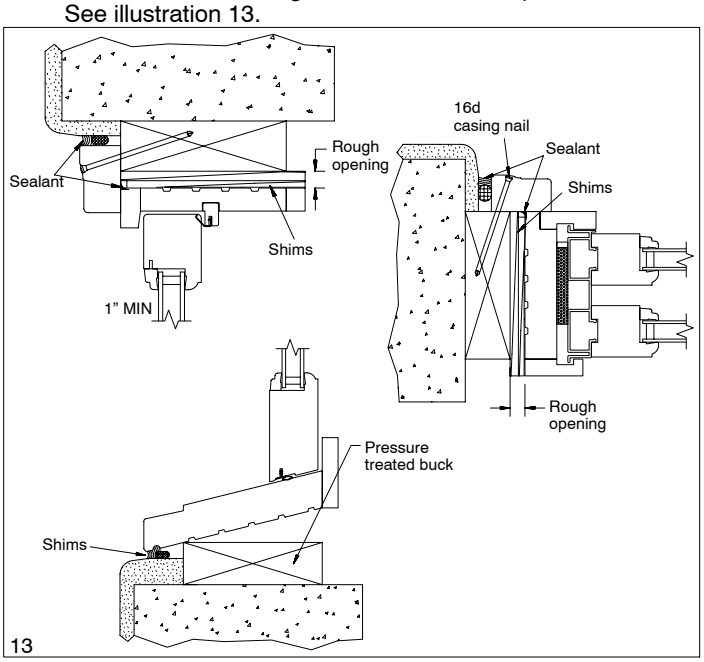

15. **For units utilizing jamb screw installation:** Once the unit has been properly shimmed, plumbed and squared fasten unit to wood buck/rough opening with #8 X 2 1/2″ for the head jamb and #8 X 3″ for the side jambs. Screws must be a minimum of 1 from edge of buck with a minimum 1 1/″4 penetration. Place the screws 6″ from each corner, maximum 12″ on center, with a minimum of 2 per side. A screw must be placed at each end of the check rail. See illustration 14.

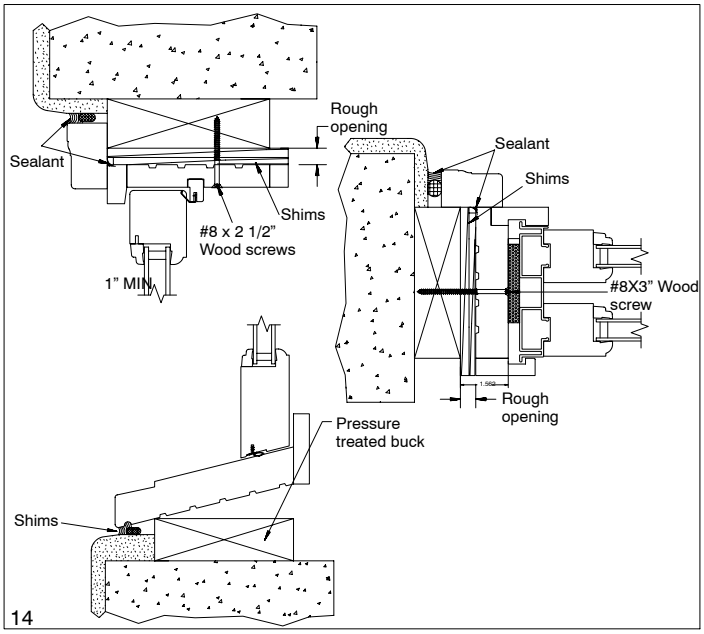

16. If unit is nailed through the casing be sure to set nails below the surface and fill nail holes with wood putty.

17. **For units utilizing masonry clip installation:** Once the unit has been properly shimmed, plumbed and squared wrap clips to the interior around wood buck, predrill two 5/32″ (4) holes for screws and fasten with 1 5/8″ sheet rock screws, 2 per clips. The screws must be placed no greater than 1/4″ (6) from the edge of the wood buck with the rough opening a maximum of 1/2″ gap at point of attachment. Angle the screws a minimum of 15 degrees towards the thicker part of the buck. See illustration 15.

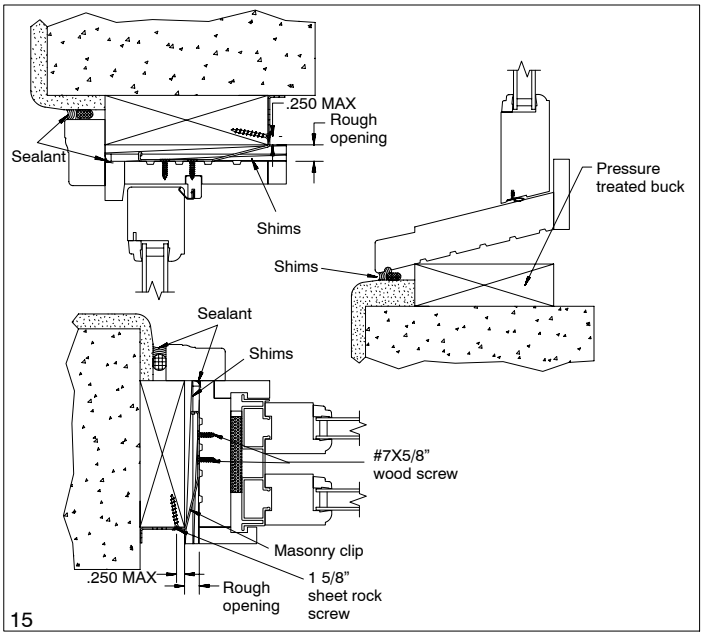

15

NOTE: Illustration 12, 13 and 14 show masonry openings but apply to standard wood rough applications as well.

CAUTION: Installations in severe environments may require additional fasteners or alternate methods of securing the unit. Check local codes and if needed consult a structural engineer for proper procedures.

18. Cut off shims flush with the interior jamb to allow application of interior trim.

19. Fill the gaps between the window frame and framing members on interior with fiberglass insulation. Do not pack tightly. See illustration 15.

NOTE: Foam type insulation may be used to form an infiltration seal as required by some building codes. However, a low expansion type foam should be used in combination with fiberglass insulation.

CAUTION: When using expanding foam insulation it is very important not to bow the head jamb and/or side jambs of the unit.

SEALING THE INSTALLATION – AIR BARRIER

20. If not done already, install a drip cap along the head jamb or head jamb casing. Be sure to apply a bead of sealant along the back sides of both vertical and horizontal surfaces of the cap that come in contact with the window, window casing, and/or sheathing. See Illustration 16.

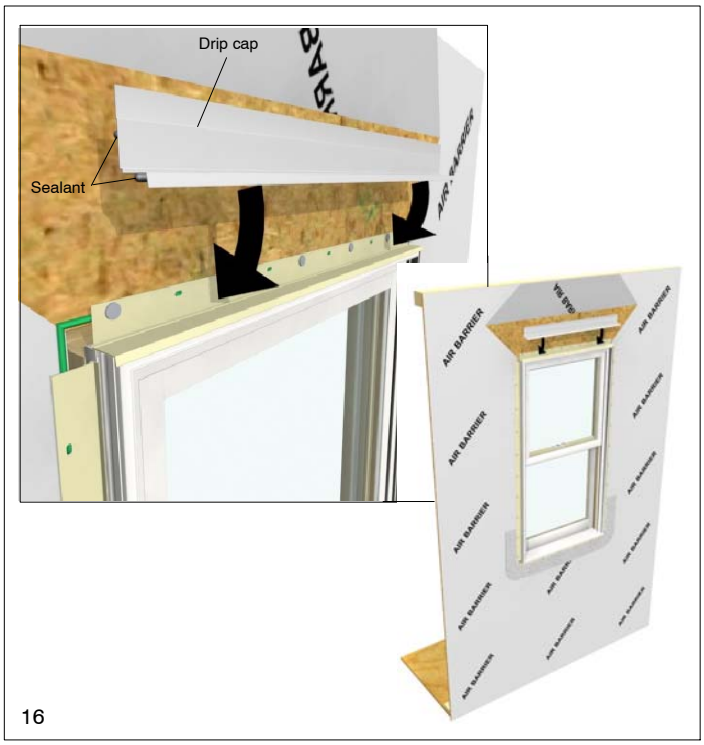

16

21. Lap vertical strips of self sealing adhesive membrane onto the unit or casing and out over the air barrier. Make small cuts at the head jamb to allow the membrane to fold back onto the exterior. See illustration 17.

22. Install another layer of adhesive membrane lapping onto head jamb of unit and over sheathing. Membrane flashing at head jamb should extend and cover flashing membrane previously installed at jambs. See illustration 17.

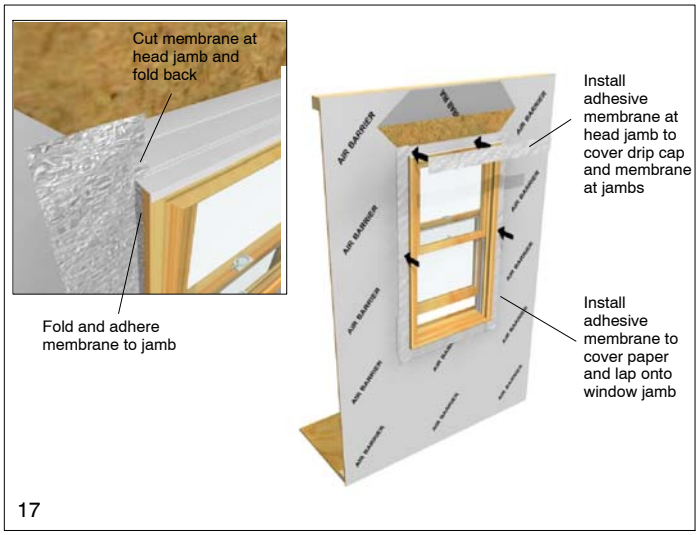

17

23. Fold head jamb air barrier down over the head jamb flashing. Apply seam seal tape over the diagonal cut in air barrier. Make sure the tape laps onto the unit or casing. Tape and seal any seams and fasteners directly above the unit. See illustration 18. Proceed to the **"Final Sealing Procedures"** section.

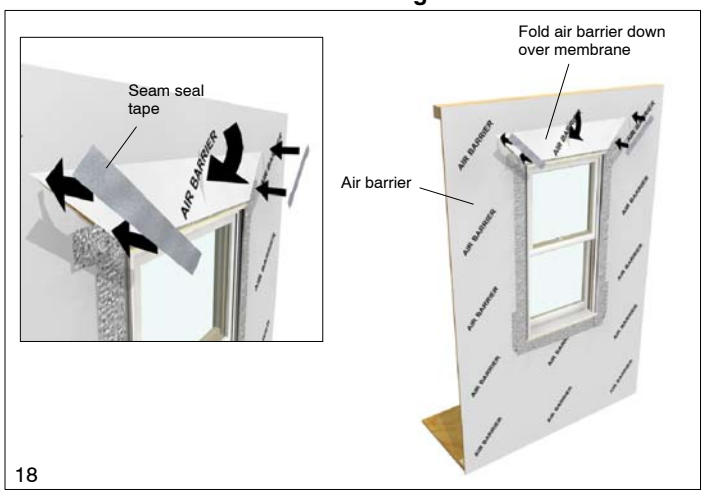

18

SEALING THE INSTALLATION - BUILDING PAPER

24. If not done already, install a drip cap along the head jamb or head jamb casing. Be sure to apply a bead of sealant along the back sides of both vertical and horizontal surfaces of the cap that come in contact with the window, window casing, and/or sheathing. See illustration 19.

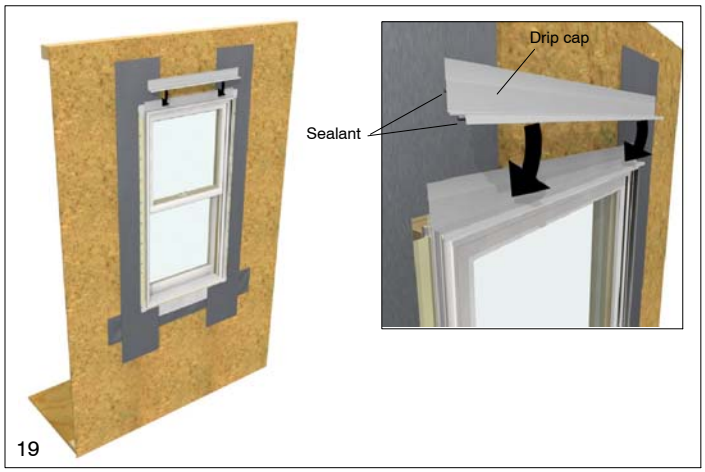

19

25. Lap vertical strips of self sealing adhesive membrane onto the unit or casing and out over the air barrier or building paper. Make small cuts at the head jamb to allow the membrane to fold back onto the exterior. See illustration 20.

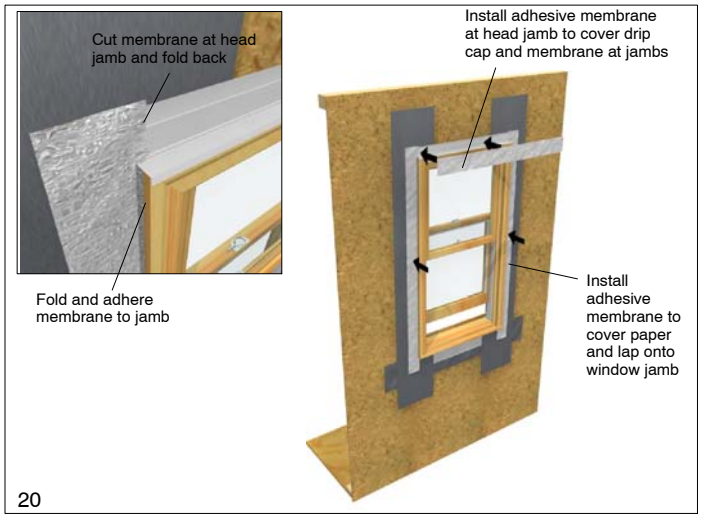

20

26. Tuck a double ply layer of building paper under the sill flashing. At the jambs, install a double ply roll beneath the jamb flashing overlapping the previous course by at least 2″. Continue installing courses beyond the height of the window unit as shown. See illustration 21.

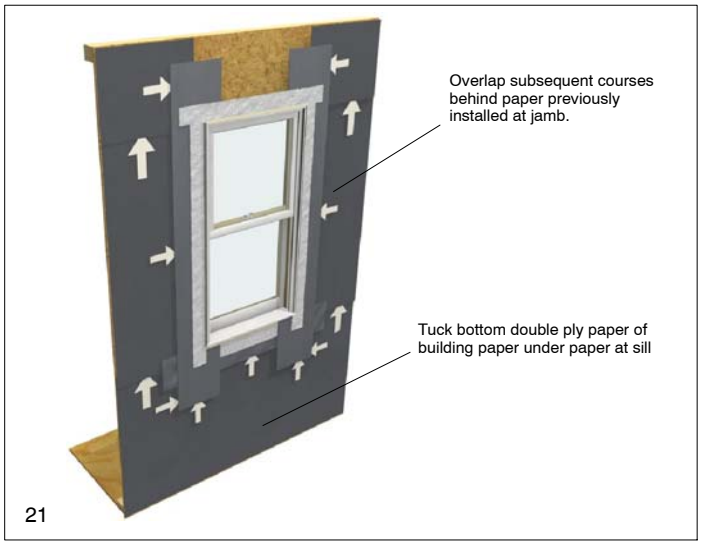

21

27. Size and cut a double roll of building paper to bridge the opening between the paper courses at the sides. This course should extend past the paper previously installed by at least 6″. See illustration 22. Proceed to the **"Final Sealing Procedures"** section.

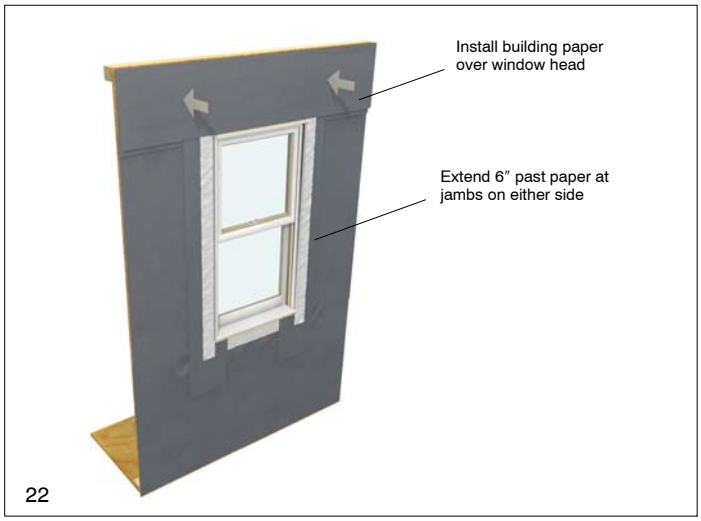

22

FINAL SEALING PROCEDURES

28. After exterior finish or siding is installed, apply sealant around the exterior perimeter of the unit frame or casing. As needed, insert backing material between the frame or casing and the structure to provide a proper sealant joint. Sealant depth must be equal to width between unit and exterior finish material (brick and masonry apply). Always refer to the manufacturers recommendations for proper surface preparation and application.
See illustration 23.

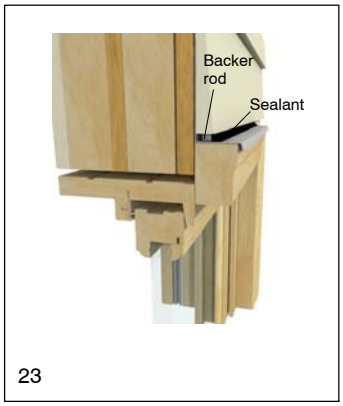

IMPORTANT! Perimeter sealant must be Grade NS Class 25 per ASTM C920 and compatible with the window /door product and the finished exterior(s) of the building. Using improper sealant could result in sealant failure causing air and water infiltration.

TILT FEATURE OPERATION

The Marvin Double Hung is designed with a tilt feature that allows the consumer to wash the exterior of sash without removing sash from the frame.

NOTE: Only the bottom sash may be tilted on a Single Hung unit.

29. To tilt bottom sash, simply raise sash about 3″(76). Depress vinyl jamb liner on each side and ease top rail of bottom sash out toward you to a horizontal position. See illustration 24.

WARNING: To prevent damage if sash has ogee lug option, screen and/or combination panel must be removed before tilting sash inward.

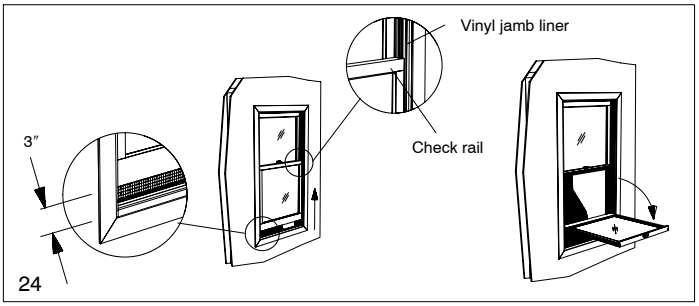

NOTE: The Single Hung top sash is not tiltable.

30. To tilt a Double Hung top sash, Marvins recommends removing the bottom sash (see step 31 in section below). You may rest the top rail of bottom sash on a stable padded surface to prevent damage to the unit or personal injury (do not pivot beyond 90 degrees or damage may occur). Lower top sash about 1/2 way. Depress vinyl jamb liner on each side and ease top of sash toward you to a horizontal position. See illustration 25.

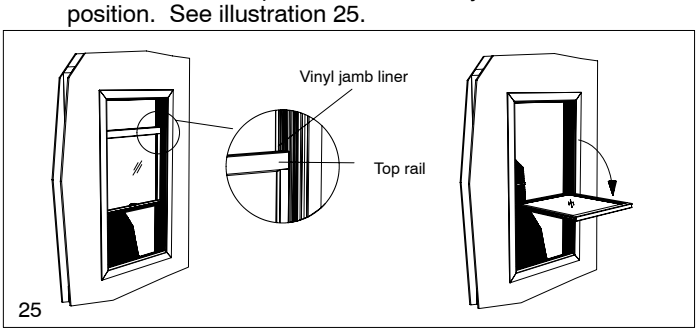

31. To tilt top sash back to the original position, tilt upward and depress vinyl jamb liner on each side and ease sash into vinyl jamb liner track. Lower sash slightly to engage locking terminal assembly. Raise sash to head jamb, check operation. Install bottom sash. To tilt sash back to original position, follow procedures listed above. See illustration 26.

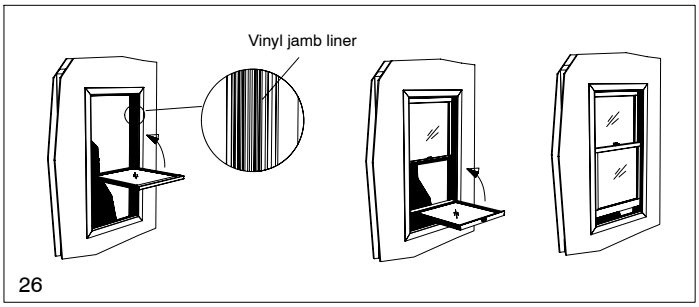

REMOVING MAGNUM DOUBLE HUNG SASH

32. Raise bottom sash about 3″(76). Depress vinyl jamb liner on both sides and ease top of sash toward you to a horizontal position. Lift one side and remove sash. See illustration 27.

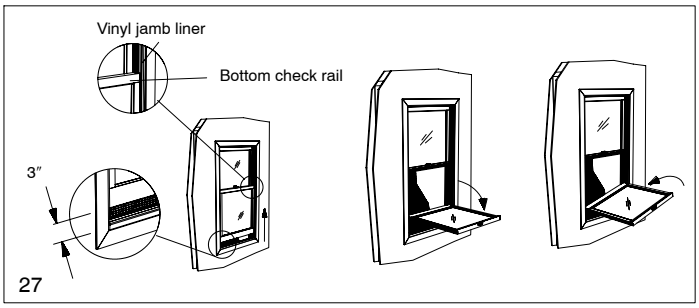

NOTE: The Single Hung top sash is not removable.

33. Lower the Double Hung top sash about 1/2 way. Depress vinyl jamb liner and ease top of sash toward you to a horizontal position. Lift one side and remove.
See illustration 28.

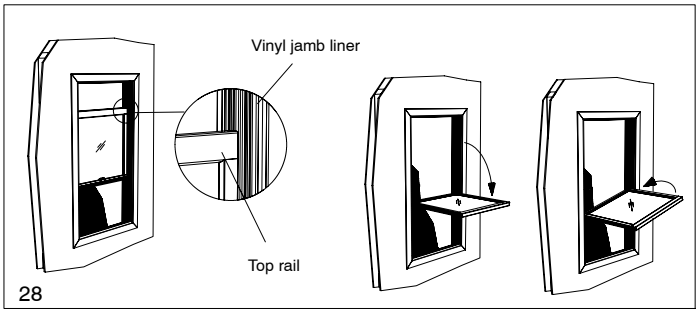

INSTALLING MAGNUM DOUBLE HUNG SASH

CAUTION: When replacing sash, both sash pins must be positioned above the locking terminal assembly located in the vinyl jamb liner.

WARNING: To prevent damage if sash has ogee lug option, screen and/or combination panel must be removed before installing sash.

NOTE: Should a locking terminal assembly slip upward toward the head jamb, the following procedures can be accomplished in order to properly position the locking terminal assembly. Skip to step 31 if this does not apply. Using a flat screwdriver and holding it firmly, pull down the locking terminal assembly located in the jamb liner approximately 8"–10" from the sill. Engage in the locked position by drawing the screwdriver towards you. Be sure they are in the locked position before letting go. Immediate damage could occur if the locking terminal assemblies are not locked. See illustration 29.

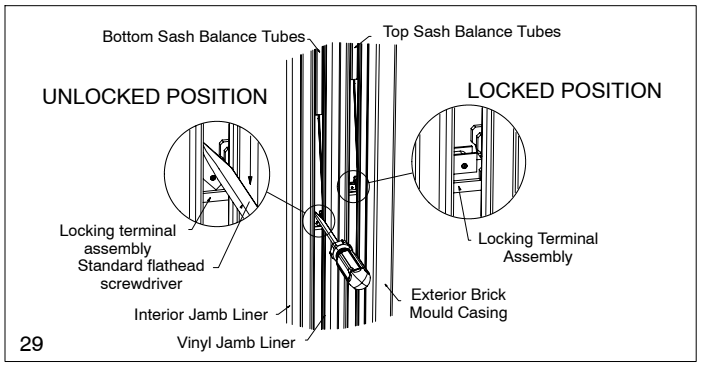

29

34. Hold the top sash in a horizontal position. Place one sash pin above the locking terminal assembly. Raise opposite side and place sash pin above locking terminal assembly on that side. Tilt sash up, depress the vinyl jamb liner on both sides, ease sash into place. Lower sash slightly to engage locking terminal assembly. Raise the top sash to the top of frame and repeat procedure for the bottom sash. See illustration 30.

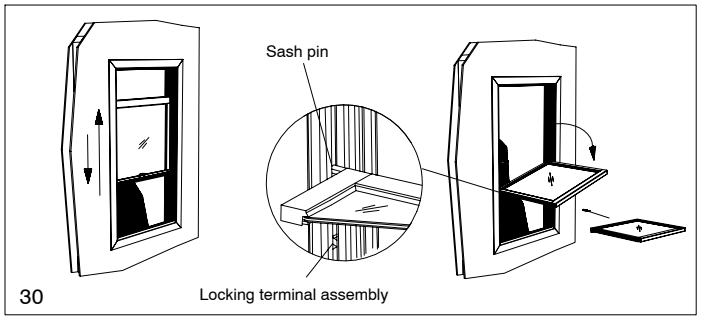

30

REMOVING COMBINATION PANELS AND SCREEN

Marvin recommends that you remove the sash before attempting to remove combination panels and screen. See sash removal section.

35. Grasp knurled knobs and pull inward as shown in illustration 29. Raise panel all the way to the top, past the removal slot located in the vinyl track. Grasp panel and pull corner to interior past removal slot and slide panel down to remove. See illustration 31.

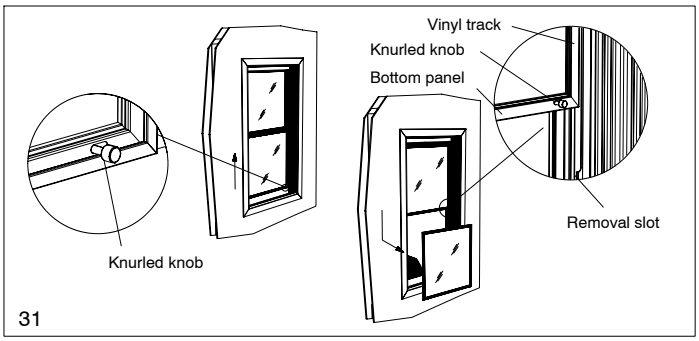

31

36. Turn the screen latches to the open position as shown in illustration 32. Pull screen towards you to remove.

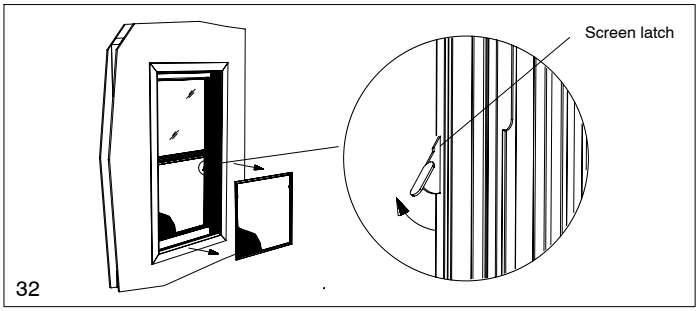

32

37. Turn the top panel latch to the open position as shown in illustration 33. Raise the panel slightly to clear the track slot; pull towards you to remove.

INSTALLING COMBINATION PANELS AND SCREEN

38. Insert top panel into combination frame. Lift slightly, push in and lower to position into track slot. Turn the top panel latches to the locked position as shown in illustration 33.

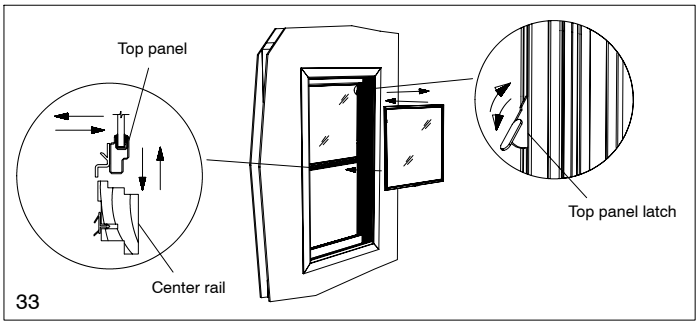

33

39. Next, insert the screen into the combination frame. Turn the screen latches to the locked position as shown in illustration 34.

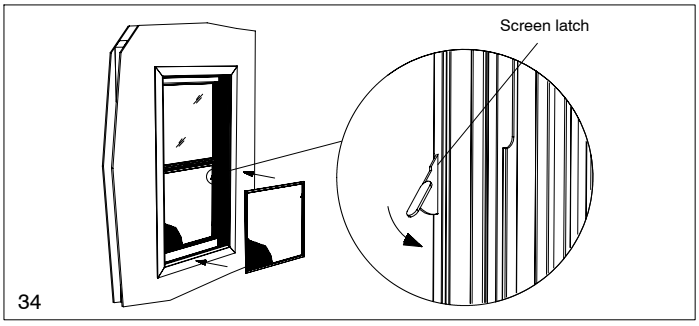

34

40. To insert the operating panel, simply place the left edge of the panel into the left vinyl track slot, ensuring the panel is above the slot on the right side. Draw knurled knobs towards center of combination. Push the bottom right hand corner of the panel into the slot and lower until the panel is all the way to the bottom. Release knurled knobs.

INTERIOR FINISHING GUIDELINES

- Paint or stain/seal all wood surfaces with a high quality topcoat system.
- Follow manufacturers recommendations for proper surface preparation and application.
- Apply at least two coats of paint or polyurethane/varnish to form an adequate moisture vapor barrier.
- To access all wood surfaces easily, remove both sash from frame.
- Use extreme caution when applying finishing products near weatherstrip or vinyl components. DO NOT allow contact, solvents in most formulas ***will*** cause damage.
- Allow ample drying time before reinstalling sash to ensure complete evaporation of solvents and to reduce bonding with mating surfaces.