WOOD ULTIMATE DOUBLE HUNG ROUND TOP

RT6 EYEBROW ABOVE SPRINGLINE STANDARD SIZES DIRECT GLAZE

Rgh. Opg. (mm)	2-2 3/8 (670)	2-6 3/8 (772)	2-8 3/8 (822)	2-10 3/8 (873)	3-0 3/8 (924)	3-2 3/8 (975)	3-6 3/8 (1076)
Rgh. Opg Rad. (mm)	2-0 1/2 (622)	2-0 1/2 (622)	2-6 1/2 (775)	2-6 1/2 (775)	2-6 1/2 (775)	3-4 1/2 (1029)	3-4 1/2 (1029)
Rgh. Opg. (mm) / Rgh. Opg. Spln. (mm)							
1-0 1/2 (318) / 0-8 5/8 (219)	WUDHRT2511	WUDHRT2911	WUDHRT3111	WUDHRT3311	WUDHRT3511	WUDHRT3711	WUDHRT4111
1-6 1/2 (470) / 1-2 5/8 (372)	WUDHRT2519	WUDHRT2919	WUDHRT3119	WUDHRT3319	WUDHRT3519	WUDHRT3719	WUDHRT4119
2-0 1/2 (622) / 1-8 5/8 (524)	WUDHRT2523	WUDHRT2923	WUDHRT3123	WUDHRT3323	WUDHRT3523	WUDHRT3723	WUDHRT4123
3-0 1/2 (927) / 2-8 5/8 (829)	WUDHRT2535	WUDHRT2935	WUDHRT3135	WUDHRT3335	WUDHRT3535	WUDHRT3735	WUDHRT4135
4-0 1/2 (1232) / 3-8 5/8 (1133)	WUDHRT2547	WUDHRT2947	WUDHRT3147	WUDHRT3347	WUDHRT3547	WUDHRT3747	WUDHRT4147
5-0 1/2 (1537) / 4-8 5/8 (1438)	WUDHRT2559	WUDHRT2959	WUDHRT3159	WUDHRT3359	WUDHRT3559	WUDHRT3759	WUDHRT4159
6-0 1/2 (1842) / 5-8 5/8 (1743)	WUDHRT2571	WUDHRT2971	WUDHRT3171	WUDHRT3371	WUDHRT3571	WUDHRT3771	WUDHRT4171
Rgh. Opg. Spln. (mm)	0-7 7/32 (183)	0-7 7/32 (183)	0-7 7/8 (200)	0-7 3/16 (183)	0-6 1/2 (165)	0-7 11/16 (195)	0-6 1/2 (165)
Rgh. Opg. Spln. (mm)	1-1 7/32 (336)	1-1 7/32 (336)	1-1 7/8 (352)	1-1 3/16 (335)	1-0 1/2 (318)	1-1 11/16 (348)	1-0 1/2 (318)
Rgh. Opg. Spln. (mm)	1-7 7/32 (488)	1-7 7/32 (488)	1-7 7/8 (505)	1-7 3/16 (487)	1-6 1/2 (470)	1-7 11/16 (500)	1-6 1/2 (470)
Rgh. Opg. Spln. (mm)	2-7 7/32 (793)	2-7 7/32 (793)	2-7 7/8 (810)	2-7 3/16 (792)	2-6 1/2 (775)	2-7 11/16 (805)	2-6 1/2 (775)
Rgh. Opg. Spln. (mm)	3-7 7/32 (1098)	3-7 7/32 (1098)	3-7 7/8 (1114)	3-7 3/16 (1097)	3-6 1/2 (1080)	3-7 11/16 (1110)	3-6 1/2 (1080)
Rgh. Opg. Spln. (mm)	4-7 7/32 (1403)	4-7 7/32 (1403)	4-7 7/8 (1419)	4-7 3/16 (1402)	4-6 1/2 (1384)	4-7 11/16 (1414)	4-6 1/2 (1384)
Rgh. Opg. Spln. (mm)	5-7 7/32 (1707)	5-7 7/32 (1707)	5-7 7/8 (1724)	5-7 3/16 (1707)	5-6 1/2 (1689)	5-7 11/16 (1719)	5-6 1/2 (1689)

MEASUREMENT IDENTIFICATION
RT6 EYEBROW ABOVE SPRINGLINE

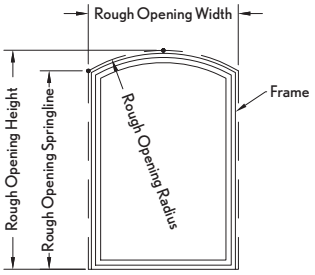

NOTES:

- If these units are NOT used as transoms, ADD 1 3/32" (28) to the rough opening height for subsill.

Wood Ultimate Double Hung Round Top: **WUDHRT**

NOT TO SCALE

WOOD ULTIMATE DOUBLE HUNG ROUND TOP

RT6 EYEBROW ABOVE SPRINGLINE STANDARD SIZES DIRECT GLAZE

Rgh. Opg. (mm)	3-10 3/8 (1178)	4-3 3/4 (1314)	4-11 3/4 (1518)	5-7 3/4 (1721)	6-3 3/4 (1924)
Rgh. Opg Rad. (mm)	3-4 1/2 (1029)	3-4 1/2 (1029)	4-6 1/2 (1384)	6-0 1/2 (1842)	6-0 1/2 (1842)
1-6 1/2 (470) / 0-11 7/32 (285)	WUDHRT4519	WUDHRT5119	WUDHRT5919	WUDHRT6719	WUDHRT7519
2-0 1/2 (622) / 1-5 7/32 (437)	WUDHRT4523	WUDHRT5123	WUDHRT5923	WUDHRT6723	WUDHRT7523
3-0 1/2 (927) / 2-5 7/32 (742)	WUDHRT4535	WUDHRT5135	WUDHRT5935	WUDHRT6735	WUDHRT7535
4-0 1/2 (1232) / 3-5 7/32 (1047)	WUDHRT4547	WUDHRT5147	WUDHRT5947	WUDHRT6747	WUDHRT7547
5-0 1/2 (1537) / 4-5 7/32 (1352)	WUDHRT4559	WUDHRT5159	WUDHRT5959	WUDHRT6759	WUDHRT7559
6-0 1/2 (1842) / 5-5 7/32 (1657)	WUDHRT4571	WUDHRT5171	WUDHRT5971	WUDHRT6771	WUDHRT7571
Rgh. Opg. (mm) / Rgh. Opg. Sph. (mm)	0-9 5/32 (233) / 1-3 5/32 (385) / 2-3 5/32 (690) / 3-3 5/32 (995) / 4-3 5/32 (1299) / 5-3 5/32 (1604)	0-9 9/16 (243) / 1-3 9/16 (395) / 2-3 9/16 (700) / 3-3 9/16 (1005) / 4-3 9/16 (1310) / 5-3 9/16 (1614)	0-10 1/8 (257) / 1-4 1/8 (410) / 2-4 1/8 (714) / 3-4 1/8 (1019) / 4-4 1/8 (1324) / 5-4 1/8 (1629)	0-7 13/16 (198) / 1-13/16 (351) / 2-13/16 (656) / 3-13/16 (960) / 4-13/16 (1265) / 5-13/16 (1570)

RT29 ELLIPTICAL STANDARD SIZES DIRECT GLAZE

Rgh. Opg. (mm)	4-3 3/4 (1314)	4-11 3/4 (1518)	5-7 3/4 (1721)	6-3 3/4 (1924)
1-5 5/16 (456)	WUDHRT5118	WUDHRT5918	WUDHRT6718	WUDHRT7518

WOOD ULTIMATE DOUBLE HUNG ROUND TOP

RT6 EYEBROW ABOVE SPRINGLINE STANDARD SIZES ONE WIDE OPERATOR

Rgh. Opg. (mm)	2-2 3/8 (670)	2-6 3/8 (772)	2-10 3/8 (873)	3-2 3/8 (975)	3-6 3/8 (1076)	3-10 3/8 (1178)
Rgh. Opg Rad. (mm)	2-0 1/2 (622)	2-0 1/2 (622)	2-6 1/2 (775)	3-4 1/2 (1029)	3-4 1/2 (1029)	3-4 1/2 (1029)
3-5 1/8 (1045) / 3-1 9/32 (947)	WUDHRT2014	WUDHRT2414	WUDHRT2814	WUDHRT3214	WUDHRT3614	WUDHRT4014
3-9 1/8 (1146) / 3-5 9/32 (1048)	WUDHRT2016	WUDHRT2416	WUDHRT2816	WUDHRT3216	WUDHRT3616	WUDHRT4016
4-11/8 (1248) / 3-9 9/32 (1150)	WUDHRT2018	WUDHRT2418	WUDHRT2818	WUDHRT3218	WUDHRT3618	WUDHRT4018
4-5 1/8 (1349) / 4-1 9/32 (1252)	WUDHRT2020	WUDHRT2420	WUDHRT2820	WUDHRT3220	WUDHRT3620	WUDHRT4020
4-9 1/8 (1451) / 4-5 9/32 (1353)	WUDHRT2022	WUDHRT2422	WUDHRT2822	WUDHRT3222	WUDHRT3622	WUDHRT4022
5-1 1/8 (1553) / 4-9 9/32 (1455)	WUDHRT2024	WUDHRT2424	WUDHRT2824	WUDHRT3224	WUDHRT3624	WUDHRT4024
5-5 1/8 (1654) / 5-1 9/32 (1556)	WUDHRT2026	WUDHRT2426	WUDHRT2826	WUDHRT3226	WUDHRT3626	WUDHRT4026
Rgh. Opg. (mm) / Rgh. Opg. Spln. (mm)						

Rgh. Opg. (mm) / Rgh. Opg. Spln. (mm)	3-6 17/32 (1080) / 3-1 1/4 (946)	3-6 9/16 (1081) / 3-1 9/32 (947)	3-6 1/8 (1070) / 3-1 5/16 (947)	3-7 9/32 (1099) / 3-1 9/32 (947)	3-8 9/16 (1132) / 3-1 9/32 (947)
3-10 17/32 (1182) / 3-5 1/4 (1048)	3-10 9/16 (1183) / 3-5 9/32 (1048)	3-10 1/8 (1172) / 3-5 5/16 (1049)	3-11 9/32 (1201) / 3-5 9/32 (1049)	4-0 9/16 (1233) / 3-5 9/32 (1048)
4-2 17/32 (1283) / 3-9 1/4 (1149)	4-2 9/16 (1285) / 3-9 9/32 (1150)	4-2 1/8 (1273) / 3-9 5/16 (1151)	4-3 9/32 (1302) / 3-9 9/32 (1150)	4-4 9/16 (1335) / 3-9 9/32 (1150)
4-6 17/32 (1385) / 4-1 1/4 (1251)	4-6 9/16 (1386) / 4-1 9/32 (1252)	4-6 1/8 (1375) / 4-1 5/16 (1253)	4-7 9/32 (1404) / 4-1 9/32 (1252)	4-8 9/16 (1437) / 4-1 9/32 (1251)
4-10 17/32 (1486) / 4-5 1/4 (1352)	4-10 9/16 (1488) / 4-5 9/32 (1353)	4-10 1/8 (1477) / 4-5 5/16 (1354)	4-11 9/32 (1505) / 4-5 9/32 (1359)	5-0 9/16 (1538) / 4-5 9/32 (1353)
5-2 17/32 (1588) / 4-9 1/4 (1454)	5-2 9/16 (1589) / 4-9 9/32 (1455)	5-2 1/8 (1578) / 4-9 5/16 (1455)	5-3 9/32 (1607) / 4-9 9/32 (1455)	5-4 9/16 (1640) / 4-9 9/32 (1455)
5-6 17/32 (1690) / 5-1 1/4 (1556)	5-6 9/16 (1691) / 5-1 9/32 (1556)	5-6 1/8 (1680) / 5-1 5/16 (1557)	5-7 9/32 (1709) / 5-1 9/32 (1557)	5-8 9/16 (1741) / 5-1 9/32 (1556)
Rgh. Opg. (mm) / Rgh. Opg. Spln. (mm)					

NOTES:

E These windows meet national egress codes for fire evacuation. Local codes may differ.

Wood Ultimate Double Hung Round Top: **WUDHRT**

NOT TO SCALE

WOOD ULTIMATE DOUBLE HUNG ROUND TOP

RT6 EYEBROW ABOVE SPRINGLINE STANDARD SIZES ONE WIDE OPERATOR

Rgh. Opg. (mm)	2-2 3/8 (670)	2-6 3/8 (772)	2-10 3/8 (837)	3-2 3/8 (975)	3-6 3/8 (1076)	3-10 3/8 (1178)
Rgh. Opg Rad. (mm)	2-0 1/2 (622)	2-0 1/2 (622)	2-6 1/2 (775)	3-4 1/2 (1029)	3-4 1/2 (1029)	3-4 1/2 (1029)
Rgh. Opg. (mm) / Rgh. Opg. Spln. (mm)	WUDHRT2028	WUDHRT2428	WUDHRT2828	WUDHRT3228 E	WUDHRT3628 E	WUDHRT4028 E
5-9 1/8 (1756) / 5-5 9/32 (1658)		5-10 17/32 (1791) / 5-5 1/4 (1657)	5-10 9/16 (1792) / 5-5 9/32 (1658)	5-10 1/8 (1781) / 5-5 5/16 (1659)	5-11 9/32 (1810) / 5-5 9/32 (1658)	6-0 9/16 (1843) / 5-5 9/32 (1658)
Rgh. Opg. (mm) / Rgh. Opg. Spln. (mm)	WUDHRT2030	WUDHRT2430	WUDHRT2830 E	WUDHRT3230 E	WUDHRT3630 E	WUDHRT4030 E
6-11/8 (1858) / 5-9 9/32 (1760)		6-2 17/32 (1893) / 5-9 1/4 (1759)	6-2 9/16 (1894) / 5-9 9/32 (1759)	6-2 1/8 (1883) / 5-9 5/16 (1760)	6-3 9/32 (1912) / 5-9 9/32 (1760)	6-4 9/16 (1945) / 5-9 9/32 (1759)
Rgh. Opg. (mm) / Rgh. Opg. Spln. (mm)	WUDHRT2032	WUDHRT2432	WUDHRT2832 E	WUDHRT3232 E	WUDHRT3632 E	WUDHRT4032 E
6-5 1/8 (1959) / 6-1 9/32 (1861)		6-6 17/32 (1994) / 6-1 1/4 (1860)	6-6 9/16 (1996) / 6-1 9/32 (1861)	6-6 1/8 (1985) / 6-1 5/16 (1862)	6-7 9/32 (2013) / 6-1 9/32 (1861)	6-8 9/16 (2046) / 6-1 9/32 (1861)
Rgh. Opg. (mm) / Rgh. Opg. Spln. (mm)	WUDHRT2034	WUDHRT2434 E	WUDHRT2834 E	WUDHRT3234 E	WUDHRT3634 E	WUDHRT4034 E
6-9 1/8 (2061) / 6-5 9/32 (1963)		6-10 17/32 (2096) / 6-5 1/4 (1962)	6-10 9/16 (2097) / 6-5 9/32 (1963)	6-10 1/8 (2086) / 6-5 5/16 (1963)	6-11/32 (2115) / 6-5 9/32 (1963)	7-0 9/16 (2148) / 6-5 9/32 (1963)
Rgh. Opg. (mm) / Rgh. Opg. Spln. (mm)	WUDHRT2036	WUDHRT2436 E	WUDHRT2836 E	WUDHRT3236 E	WUDHRT3636 E	WUDHRT4036 E
7-1 1/8 (2162) / 6-9 9/32 (2064)		7-2 17/32 (2198) / 6-9 1/4 (2064)	7-2 9/16 (2199) / 6-9 9/32 (2064)	7-2 1/8 (2188) / 6-9 5/16 (2065)	7-3 9/32 (2217) / 6-9 9/32 (2065)	7-4 9/16 (2249) / 6-9 9/32 (2064)

NOT TO SCALE

WOOD ROUND TOP

RT1 TRUE HALF CIRCLE STANDARD SIZES DIRECT GLAZE

Rgh. Opg. (mm)	2-6 3/8 (772)	2-8 3/8 (822)	2-10 3/8 (873)	3-0 3/8 (924)	3-2 3/8 (975)	3-6 3/8 (1076)
	1-3 3/16 (386)	1-4 3/16 (411)	1-5 3/16 (437)	1-6 3/16 (462)	1-7 3/16 (487)	1-9 3/16 (538)
	WUDHRT2914	WUDHRT3115	WUDHRT3316	WUDHRT3517	WUDHRT3718	WUDHRT4120

Rgh. Opg. (mm)	3-10 3/8 (1178)	4-3 3/4 (1314)	4-11 3/4 (1518)	5-7 3/4 (1721)	6-3 3/4 (1924)
	1-11 3/16 (589)	2-1 7/8 (657)	2-5 7/8 (759)	2-9 7/8 (860)	3-1 7/8 (962)
	WUDHRT4522	WUDHRT5025	WUDHRT5828	WUDHRT6632	WUDHRT7437

WOOD ULTIMATE DOUBLE HUNG TRANSOM SERIES
RT1 TRUE HALF CIRCLE IN SASH

Rgh. Opg. (mm)	2-2 3/8 (670)	2-6 3/8 (772)	2-8 3/8 (822)	2-10 3/8 (873)	3-0 3/8 (924)	3-2 3/8 (975)
Rgh. Opg Rad. (mm)	1-1 3/16 (335)	1-3 3/16 (386)	1-4 3/16 (411)	1-5 3/16 (437)	1-6 3/16 (462)	1-7 3/16 (487)
	1-1 3/16 (335)	1-3 3/16 (386)	1-4 3/16 (411)	1-5 3/16 (437)	1-6 3/16 (462)	1-7 3/16 (487)
	WUDHRT2015	WUDHRT2417	WUDHRT2618	WUDHRT2819	WUDHRT3020	WUDHRT3221

Rgh. Opg. (mm)	3-6 3/8 (1076)	3-10 3/8 (1178)	4-3 3/4 (1314)	4-11 3/4 (1518)	5-7 3/4 (1721)	6-3 3/4 (1924)
Rgh. Opg Rad. (mm)	1-9 3/16 (538)	1-11 3/16 (589)	2-1 7/8 (657)	2-5 7/8 (759)	2-9 7/8 (860)	3-1 7/8 (962)
	1-9 3/16 (538)	1-11 3/16 (589)	2-1 7/8 (657)	2-5 7/8 (759)	2-9 7/8 (860)	3-1 7/8 (962)
	WUDHRT3623	WUDHRT4025	WUDHRT5027	WUDHRT5831	WUDHRT6635	WUDHRT7439

CONSTRUCTION DETAILS

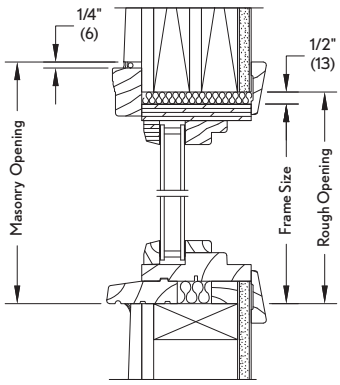

HEAD JAMB AND SILL - DIRECT GLAZE

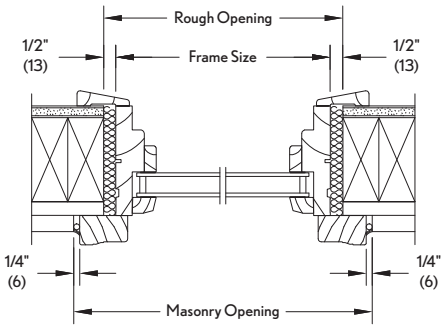

JAMB - DIRECT GLAZE

NOTES:

- Elevations shown represent standard transoms without subsill. Add 15/16" (24) for direct glaze and 1 3/32" (28) for in sash to the rough opening height for standalone unit.
- Construction details without subsill not shown.

Wood Ultimate Double Hung Round Top: **WUDHRT**

NOT TO SCALE

CLAD ULTIMATE DOUBLE HUNG ROUND TOP

RT6 EYEBROW ABOVE SPRINGLINE STANDARD SIZES DIRECT GLAZE

Rgh. Opg. (mm)	2-2 3/8 (670)	2-6 3/8 (772)	2-8 3/8 (822)	2-10 3/8 (873)	3-0 3/8 (924)	3-2 3/8 (975)	3-6 3/8 (1076)
Rgh. Opg Rad. (mm)	2-0 1/2 (622)	2-0 1/2 (622)	2-6 1/2 (775)	2-6 1/2 (775)	2-6 1/2 (775)	3-4 1/2 (1029)	3-4 1/2 (1029)
Rgh. Opg. Sph. (mm)	CUDHRT2511	CUDHRT2911	CUDHRT3111	CUDHRT3311	CUDHRT3511	CUDHRT3711	CUDHRT4111
1-0 1/2 (318) 0-8 5/8 (219)		0-7 7/32 (183)	0-7 7/8 (200)	0-7 3/16 (183)	0-6 1/2 (165)	0-7 11/16 (195)	0-6 1/2 (165)
Rgh. Opg. Sph. (mm)	CUDHRT2519	CUDHRT2919	CUDHRT3119	CUDHRT3319	CUDHRT3519	CUDHRT3719	CUDHRT4119
1-6 1/2 (470) 1-2 5/8 (371)		1-1 7/32 (336)	1-1 7/8 (352)	1-1 3/16 (335)	1-0 1/2 (318)	1-1 11/16 (348)	1-0 1/2 (318)
Rgh. Opg. Sph. (mm)	CUDHRT2523	CUDHRT2923	CUDHRT3123	CUDHRT3323	CUDHRT3523	CUDHRT3723	CUDHRT4123
2-0 1/2 (622) 1-8 5/8 (524)		1-7 7/32 (488)	1-7 7/8 (505)	1-7 3/16 (487)	1-6 1/2 (470)	1-7 11/16 (500)	1-6 1/2 (470)
Rgh. Opg. Sph. (mm)	CUDHRT2535	CUDHRT2935	CUDHRT3135	CUDHRT3335	CUDHRT3535	CUDHRT3735	CUDHRT4135
3-0 1/2 (927) 2-8 5/8 (829)		2-7 7/32 (793)	2-7 7/8 (810)	2-7 3/16 (792)	2-6 1/2 (775)	2-7 11/16 (805)	2-6 1/2 (775)
Rgh. Opg. Sph. (mm)	CUDHRT2547	CUDHRT2947	CUDHRT3147	CUDHRT3347	CUDHRT3547	CUDHRT3747	CUDHRT4147
4-0 1/2 (1232) 3-8 5/8 (1133)		3-7 7/32 (1098)	3-7 7/8 (1114)	3-7 3/16 (1097)	3-6 1/2 (1080)	3-7 11/16 (1110)	3-6 1/2 (1080)
Rgh. Opg. Sph. (mm)	CUDHRT2559	CUDHRT2959	CUDHRT3159	CUDHRT3359	CUDHRT3559	CUDHRT3759	CUDHRT4159
5-0 1/2 (1537) 4-8 5/8 (1438)		4-7 7/32 (1403)	4-7 7/8 (1419)	4-7 3/16 (1402)	4-6 1/2 (1384)	4-7 11/16 (1414)	4-6 1/2 (1384)
Rgh. Opg. Sph. (mm)	CUDHRT2571	CUDHRT2971	CUDHRT3171	CUDHRT3371	CUDHRT3571	CUDHRT3771	CUDHRT4171
6-0 1/2 (1842) 5-8 5/8 (1743)		5-7 7/32 (1707)	5-7 7/8 (1724)	5-7 3/16 (1707)	5-6 1/2 (1689)	5-7 11/16 (1719)	5-6 1/2 (1689)

NOTES:

- Please contact your local Marvin® representative for masonry openings that include casings and subsills.

Clad Ultimate Double Hung Round Top: **CUDHRT**

NOT TO SCALE

CLAD ULTIMATE DOUBLE HUNG ROUND TOP

RT6 EYEBROW ABOVE SPRINGLINE STANDARD SIZES DIRECT GLAZE

Rgh. Opg. (mm)	3-10 3/8 (1178)	4-3 3/4 (1314)	4-11 3/4 (1518)	5-7 3/4 (1721)	6-3 3/4 (1924)
Rgh. Opg Rad. (mm)	3-4 1/2 (1029)	3-4 1/2 (1029)	4-6 1/2 (1384)	6-0 1/2 (1842)	6-0 1/2 (1842)
1-6 1/2 (470) / 0-11 7/32 (285)	CUDHRT4519	CUDHRT5119	CUDHRT5919	CUDHRT6719	CUDHRT7519
2-0 1/2 (622) / 1-5 7/32 (437)	CUDHRT4523	CUDHRT5123	CUDHRT5923	CUDHRT6723	CUDHRT7523
3-0 1/2 (927) / 2-5 7/32 (742)	CUDHRT4535	CUDHRT5135	CUDHRT5935	CUDHRT6735	CUDHRT7535
4-0 1/2 (1232) / 3-5 7/32 (1047)	CUDHRT4547	CUDHRT5147	CUDHRT5947	CUDHRT6747	CUDHRT7547
5-0 1/2 (1537) / 4-5 7/32 (1352)	CUDHRT4559	CUDHRT5159	CUDHRT5959	CUDHRT6759	CUDHRT7559
6-0 1/2 (1842) / 5-5 7/32 (1657)	CUDHRT4571	CUDHRT5171	CUDHRT5971	CUDHRT6771	CUDHRT7571
Rgh. Opg. (mm) / Rgh. Opg. Spln. (mm)	0-9 5/32 (233) / 1-3 5/32 (385) / 2-3 5/32 (690) / 3-3 5/32 (995) / 4-3 5/32 (1299) / 5-3 5/32 (1604)	0-9 9/16 (243) / 1-3 9/16 (395) / 2-3 9/16 (700) / 3-3 9/16 (1005) / 4-3 9/16 (1310) / 5-3 9/16 (1614)	0-10 1/8 (257) / 1-4 1/8 (410) / 2-4 1/8 (714) / 3-4 1/8 (1019) / 4-4 1/8 (1324) / 5-4 1/8 (1629)	0-7 13/16 (198) / 1-11 3/16 (351) / 2-11 3/16 (656) / 3-11 3/16 (960) / 4-11 3/16 (1265) / 5-11 3/16 (1570)

CLAD ULTIMATE DOUBLE HUNG
RT29 ELLIPTICAL STANDARD SIZES DIRECT GLAZE

Rgh. Opg. (mm)	4-3 3/4 (1314)	4-11 3/4 (1518)	5-7 3/4 (1721)	6-3 3/4 (1924)
1-5 5/16 (456)	CUDHRT5118	CUDHRT5918	CUDHRT6718	CUDHRT7518

NOTES:

- Please contact your local Marvin® representative for masonry openings that include casings and subsills.

NOT TO SCALE

CLAD ULTIMATE DOUBLE HUNG ROUND TOP

RT6 EYEBROW ABOVE SPRINGLINE STANDARD SIZES OPERATORS

Rgh. Opg. (mm)	2-2 3/8 (670)	2-6 3/8 (772)	2-10 3/8 (873)	3-2 3/8 (975)	3-6 3/8 (1076)	3-10 3/8 (1178)
Rgh. Opg Rad. (mm)	2-0 1/2 (622)	2-0 1/2 (622)	2-6 1/2 (775)	3-4 1/2 (1029)	3-4 1/2 (1029)	3-4 1/2 (1029)
Rgh. Opg. (mm) / Rgh. Opg. Spln. (mm)	3-4 1/2 (1029) / 3-0 21/32 (931)	3-5 29/32 (692) / 3-0 5/8 (507)	3-5 31/32 (1065) / 3-0 5/8 (931)	3-5 1/2 (1054) / 3-0 21/32 (932)	3-6 21/32 (1083) / 3-0 21/32 (931)	3-7 15/16 (1116) / 3-0 5/8 (931)
	CUDHRT2014	CUDHRT2414	CUDHRT2814	CUDHRT3214	CUDHRT3614	CUDHRT4014
Rgh. Opg. (mm) / Rgh. Opg. Spln. (mm)	3-8 1/2 (1130) / 3-4 21/32 (1033)	3-9 29/32 (1168) / 3-4 5/8 (1032)	3-9 31/32 (1167) / 3-4 5/8 (1032)	3-9 1/2 (1156) / 3-4 21/32 (1033)	3-10 21/32 (1185) / 3-4 21/32 (1033)	3-11 15/16 (1217) / 3-4 5/8 (1032)
	CUDHRT2016	CUDHRT2416	CUDHRT2816	CUDHRT3216	CUDHRT3616	CUDHRT4016
Rgh. Opg. (mm) / Rgh. Opg. Spln. (mm)	4-0 1/2 (1232) / 3-8 21/32 (1134)	4-1 29/32 (1267) / 3-8 5/8 (1133)	4-1 31/32 (1269) / 3-8 5/8 (1133)	4-1 1/2 (1258) / 3-8 21/32 (1135)	4-2 21/32 (1286) / 3-8 21/32 (1134)	4-3 15/16 (1319) / 3-8 5/8 (1134)
	CUDHRT2018	CUDHRT2418	CUDHRT2818	CUDHRT3218	CUDHRT3618	CUDHRT4018
Rgh. Opg. (mm) / Rgh. Opg. Spln. (mm)	4-4 1/2 (1334) / 4-0 21/32 (1236)	4-5 29/32 (1369) / 4-0 5/8 (1235)	4-5 31/32 (1370) / 4-0 5/8 (1235)	4-5 1/2 (1359) / 4-0 21/32 (1236)	4-6 21/32 (1388) / 4-0 21/32 (1236)	4-7 15/16 (1421) / 4-0 5/8 (1235)
	CUDHRT2020	CUDHRT2420	CUDHRT2820	CUDHRT3220	CUDHRT3620	CUDHRT4020
Rgh. Opg. (mm) / Rgh. Opg. Spln. (mm)	4-8 1/2 (1435) / 4-4 21/32 (1337)	4-9 29/32 (1471) / 4-4 5/8 (1337)	4-9 31/32 (1472) / 4-4 5/8 (1337)	4-9 1/2 (1461) / 4-4 21/32 (1338)	4-10 21/32 (1489) / 4-4 21/32 (1337)	4-11 15/16 (1522) / 4-4 5/8 (1337)
	CUDHRT2022	CUDHRT2422	CUDHRT2822	CUDHRT3222	CUDHRT3622	CUDHRT4022
Rgh. Opg. (mm) / Rgh. Opg. Spln. (mm)	5-0 1/2 (1537) / 4-8 21/32 (1439)	5-1 29/32 (1572) / 4-8 5/8 (1438)	5-1 31/32 (1573) / 4-8 5/8 (1438)	5-11/2 (1562) / 4-8 21/32 (1439)	5-2 21/32 (1591) / 4-8 21/32 (1439)	5-3 15/16 (1624) / 4-8 5/8 (1439)
	CUDHRT2024	CUDHRT2424	CUDHRT2824	CUDHRT3224	CUDHRT3624	CUDHRT4024
Rgh. Opg. (mm) / Rgh. Opg. Spln. (mm)	5-4 1/2 (1638) / 5-0 21/32 (1541)	5-5 29/32 (1674) / 5-0 5/8 (1540)	5-5 31/32 (1675) / 5-0 5/8 (1540)	5-51/2 (1664) / 5-0 21/32 (1541)	5-6 21/32 (1693) / 5-0 21/32 (1541)	5-7 15/16 (1725) / 5-0 5/8 (1540)
	CUDHRT2026	CUDHRT2426	CUDHRT2826	CUDHRT3226	CUDHRT3626	CUDHRT4026

NOT TO SCALE

CLAD ULTIMATE DOUBLE HUNG ROUND TOP

RT6 EYEBROW ABOVE SPRINGLINE STANDARD SIZES OPERATORS

Rgh. Opg. (mm)	2-2 3/8 (670)	2-6 3/8 (772)	2-10 3/8 (873)	3-2 3/8 (975)	3-6 3/8 (1076)	3-10 3/8 (1178)
Rgh. Opg Rad. (mm)	2-0 1/2 (622)	2-0 1/2 (622)	2-6 1/2 (775)	3-4 1/2 (1029)	3-4 1/2 (1029)	3-4 1/2 (1029)
Rgh. Opg. (mm) / Rgh. Opg. Spln. (mm)	5-8 1/2 (1740) / 5-4 21/32 (1642)	5-9 29/32 (1775) / 5-4 5/8 (1641)	5-9 31/32 (1777) / 5-4 5/8 (1642)	5-9 1/2 (1766) / 5-4 21/32 (1643)	5-10 21/32 (1794) / 5-4 21/32 (1642)	5-11 15/16 (1827) / 5-4 5/8 (1642)
	CUDHRT2028	CUDHRT2428	CUDHRT2828	CUDHRT3228 E	CUDHRT3628 E	CUDHRT4028 E
Rgh. Opg. (mm) / Rgh. Opg. Spln. (mm)	6-0 1/2 (1842) / 5-8 21/32 (1744)	6-1 29/32 (1877) / 5-8 5/8 (1743)	6-1 31/32 (1878) / 5-8 5/8 (1743)	6-1 1/2 (1867) / 5-8 21/32 (1744)	6-2 21/32 (1896) / 5-8 21/32 (1744)	6-3 15/16 (1929) / 5-8 5/8 (1743)
	CUDHRT2030	CUDHRT2430	CUDHRT2830 E	CUDHRT3230 E	CUDHRT3630 E	CUDHRT4030 E
Rgh. Opg. (mm) / Rgh. Opg. Spln. (mm)	6-4 1/2 (1943) / 6-0 21/32 (1845)	6-5 29/32 (1979) / 6-0 5/8 (1845)	6-5 31/32 (1980) / 6-0 5/8 (1845)	6-5 1/2 (1969) / 6-0 21/32 (1846)	6-6 21/32 (1997) / 6-0 21/32 (1845)	6-7 15/16 (2030) / 6-0 5/8 (1845)
	CUDHRT2032	CUDHRT2432	CUDHRT2832 E	CUDHRT3232 E	CUDHRT3632 E	CUDHRT4032 E
Rgh. Opg. (mm) / Rgh. Opg. Spln. (mm)	6-8 1/2 (2045) / 6-4 21/32 (1947)	6-9 29/32 (2080) / 6-4 5/8 (1946)	6-9 31/32 (2081) / 6-4 5/8 (1947)	6-9 1/2 (2070) / 6-4 21/32 (1948)	6-10 21/32 (2099) / 6-4 21/32 (1947)	6-11 15/16 (2132) / 6-4 5/8 (1946)
	CUDHRT2034	CUDHRT2434 E	CUDHRT2834 E	CUDHRT3234 E	CUDHRT3634 E	CUDHRT4034 E
Rgh. Opg. (mm) / Rgh. Opg. Spln. (mm)	7-0 1/2 (2146) / 6-8 21/32 (2049)	7-1 29/32 (2182) / 6-8 5/8 (2048)	7-1 31/32 (2183) / 6-8 5/8 (2048)	7-1 1/2 (2172) / 6-8 21/32 (2049)	7-2 21/32 (2201) / 6-8 21/32 (2049)	7-3 15/16 (2234) / 6-8 5/8 (2048)
	CUDHRT2036	CUDHRT2436 E	CUDHRT2836 E	CUDHRT3236 E	CUDHRT3636 E	CUDHRT4036 E

NOTES:

- Please contact your local Marvin® representative for masonry openings that include casings and subsills.

E These windows meet national egress codes for fire evacuation. Local codes may differ.

NOT TO SCALE

CLAD ULTIMATE DOUBLE HUNG ROUND TOP

CLAD ULTIMATE DOUBLE HUNG TRANSOM SERIES
RT2 TRUE ROUND ABOVE SPRINGLINE STANDARD SIZES IN SASH

Rgh. Opg. (mm)	Rgh. Opg Rad. (mm)	Rgh. Opg. Sph. (mm)		
2-2 3/8 (670)	1-1 3/16 (335)	1-3 3/4 (400)	0-2 9/16 (65)	CUDHRT2015
2-6 3/8 (722)	1-3 3/16 (386)	1-5 3/4 (451)	0-2 9/16 (65)	CUDHRT2417
2-8 3/8 (822)	1-4 3/16 (411)	1-6 3/4 (476)	0-2 9/16 (65)	CUDHRT2618
2-10 3/8 (873)	1-5 3/16 (436)	1-7 3/4 (502)	0-2 9/16 (65)	CUDHRT2819
3-0 3/8 (924)	1-6 3/16 (462)	1-8 3/4 (527)	0-2 9/16 (65)	CUDHRT3020
3-2 3/8 (975)	1-7 3/16 (487)	1-9 3/4 (552)	0-2 9/16 (65)	CUDHRT3221

Rgh. Opg. (mm)	Rgh. Opg Rad. (mm)	Rgh. Opg. Sph. (mm)		
3-6 3/8 (1076)	1-9 3/16 (538)	1-11 3/4 (603)	0-2 9/16 (65)	CUDHRT3623
3-10 3/8 (1178)	1-11 3/16 (589)	2-1 3/4 (654)	0-2 9/16 (65)	CUDHRT4025
4-3 3/4 (1314)	2-1 7/8 (657)	2-4 7/16 (722)	0-2 9/16 (65)	CUDHRT5027
4-11 3/4 (1518)	2-5 7/8 (759)	2-8 7/16 (824)	0-2 9/16 (65)	CUDHRT5831
5-7 3/4 (1721)	2-9 7/8 (860)	3-0 7/16 (926)	0-2 9/16 (65)	CUDHRT6635
6-3 3/4 (1924)	3-1 7/8 (962)	3-4 7/16 (1027)	0-2 9/16 (65)	CUDHRT7439

CLAD ULTIMATE DOUBLE HUNG
RT1 TRUE HALF CIRCLE STANDARD SIZES DIRECT GLAZE

Rgh. Opg. (mm)		
2-6 3/8 (772)	1-3 3/16 (386)	CUDHRT2914
2-8 3/8 (822)	1-4 3/16 (411)	CUDHRT3115
2-10 3/8 (873)	1-5 3/16 (437)	CUDHRT3316
3-0 3/8 (924)	1-6 3/16 (462)	CUDHRT3517
3-2 3/8 (975)	1-7 3/16 (487)	CUDHRT3718
3-6 3/8 (1076)	1-9 3/16 (538)	CUDHRT4120

Rgh. Opg. (mm)		
3-10 3/8 (1178)	1-11 3/16 (589)	CUDHRT4522
4-3 3/4 (1314)	2-1 7/8 (657)	CUDHRT5025
4-11 3/4 (1518)	2-5 7/8 (759)	CUDHRT5828
5-7 3/4 (1721)	2-9 7/8 (860)	CUDHRT6632
6-3 3/4 (1924)	3-1 7/8 (962)	CUDHRT7437

CONSTRUCTION DETAILS

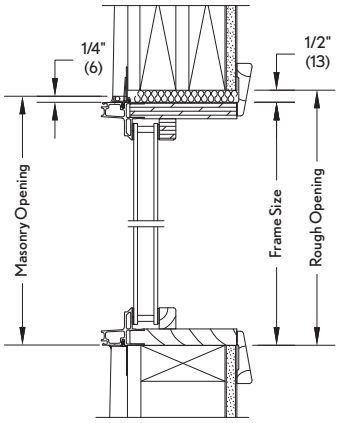

HEAD JAMB AND SILL - DIRECT GLAZE

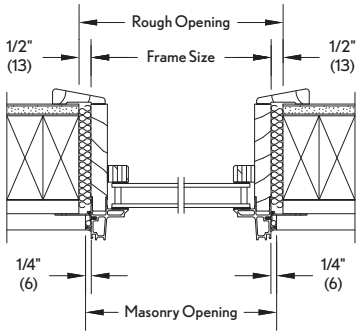

JAMB - DIRECT GLAZE

NOT TO SCALE