Ultimate Sliding French Door Supplement

The following supplemental instruction applies to:
Clad and Wood Ultimate French Doors only

Standard Parts Shipped:

Each Marvin Ultimate Sliding French Door is sent with a handle set, roller adjustment/bumper block hole plugs, #8 x 2 1/2″ sheet metal screws. Clad units will receive a nailing fin corner gasket package. IZ3 units will receive #8 x 3″ sheet metal screws

If any of these parts are missing, contact your local Marvin dealer for replacement parts information.

Permanently Securing the Door

After your Marvin Sliding French Door is installed into the rough opening, perform the following steps to permanently secure the door.

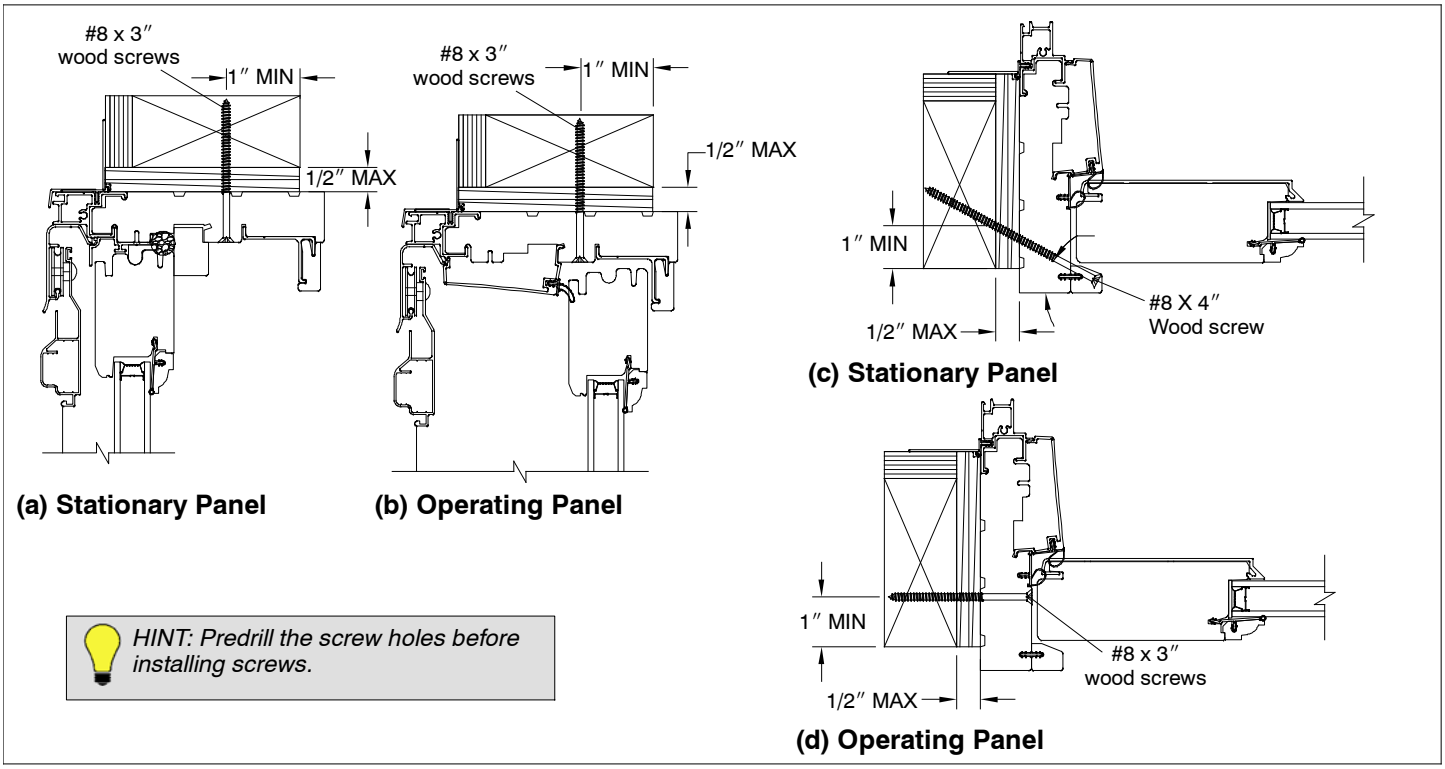

Figure 1: Securing the door.

1. **For units utilizing jamb screw installation (wood and clad):** Once the unit has been properly shimmed, plumbed, and squared fasten unit to wood buck/rough opening with minimum diameter of a #8 wood screw. Length of jamb screws may vary depending on type of unit, location and operation of the panel with a minimum buck penetration of 1 1/4″ (32). A minimum jamb screw length of 3″ (76) is required. Screws must be a minimum of 1″ (25) from edge of buck. Place the screw 6″ (152) from each corner, maximum 12″ (305) on center, with a minimum of 2 per side. See figures 1a – 1d.

2. **For units utilizing masonry clip and structural bracket installation (wood and clad):** Refer to the installation instructions included with the clips/brackets.

Note: IZ3 units require replacing both screws through the keepers and the replacement of 2 head jamb retainer screws with #8x3″ sheet metal screws provided.

Proceed to general door instruction for steps on how to secure the sill and final flashing and sealing procedures.

Adjusting the Door Panel

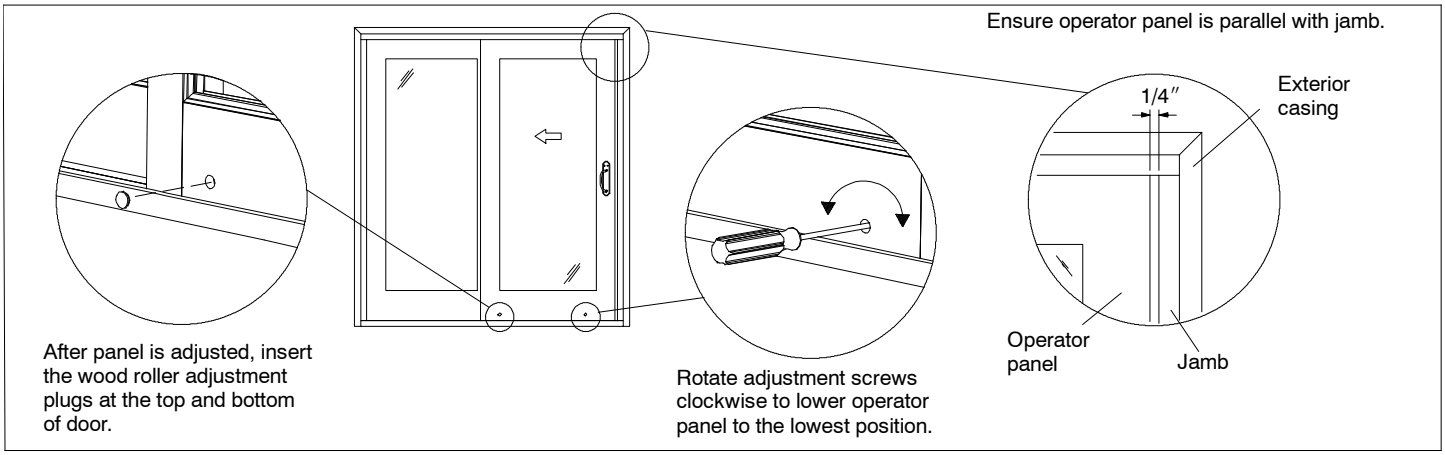

Figure 2: Adjusting the panel.

1. Rotate both adjustment screws clockwise until operator panel is in the lowest position. Then adjust screws counter-clockwise until door slides easily. See figure 2.
2. Open door 1/4″ (6) from the jamb and adjust door so it is parallel to the jamb. When the door is adjusted parallel to operator jamb, insert wood plugs at bottom of door. See figure 2.

NOTE: Keepers may need adjustment to compensate for improperly shimmed locking jamb. For assembly of the keepers see figure 3.

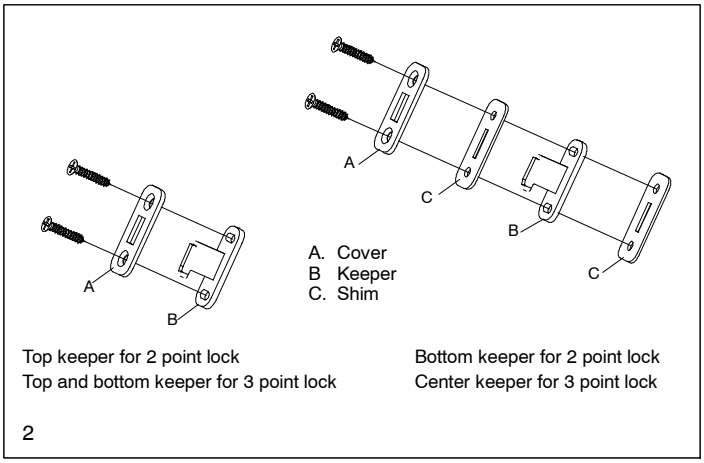

Figure 3: Assembling the keepers.

SLIDING DOORS INSTALLING OPERATING PANELS

CAUTION: Large door units may be very heavy and awkward to handle. It is important to obtain adequate assistance to avoid injury when handling the unit.

NOTE: Be sure rollers are to the lowest setting

1. Remove top bumper.
2. Remove #8x1″ screws holding operator panel guide. See figure 4.

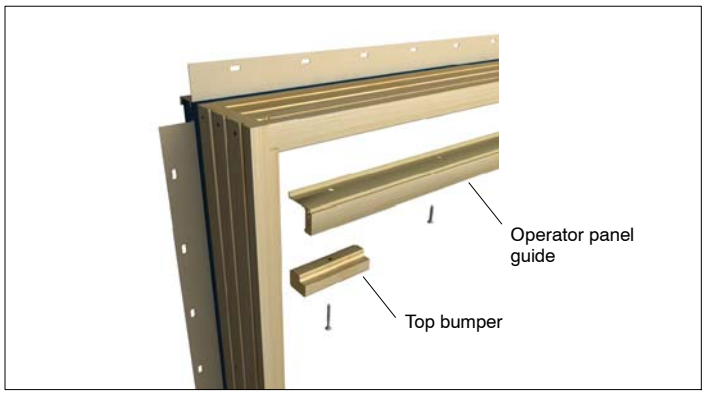

Figure 4

3. **For 2-panel and 3-panel doors with standard sill**: Working from the interior, set active panel onto sill track and tilt toward frame. Make sure rollers are on the track. See figure 5.

Figure 5

4. **For 4-panel doors with standard sill**: Working from the interior, set inactive panel onto sill and tilt toward frame. Make sure rollers are on the track. Close panel and temporarily engage the flush bolt. Set active panel into place, making sure rollers are on the track.
5. **For all doors with low profile sill**: Set the inactive panel (if applicable) down in front of the stationary panel, overlapping the stationary panel as much as possible. Place the back of the panel down on the rollers and roller track. Maneuver the front end of the panel sweep between the two weather strip pieces in the sill while setting the front of the panel down on the roller track. Close panel and temporarily engage the flush bolt. Follow this step for the active panel as well. There should be no wrinkles or folds in the sill weather strip. See figure 6.

Figure 6: Units with low profile sill.

CAUTION: Do not bounce panel sweep on weather strip. Sweep has an edge that could potentially tear weather strip if care is not taken.

6. **For 4-panel doors:** While supporting both panels, disengage the flush bolt on the inactive panel, and set panel guide into place. If the panel guide is difficult to insert, the panel rollers may need to be lowered.
7. Install one #8x1″ screw through the predrilled holes in the panel guide and into head jamb on each side of the operating panel(s). Open the active and inactive panels (where applicable) and install two #8x1″ screws through the predrilled holes in the panel guide and into head jamb. (Package “A” if installing a KD door).
8. Install top bumpers with #8x1 1/2″ pan head screws. (Package “F” if installing a KD door). See figure 4.