Marvin Ultimate Lift and Slide Door System

Installation Guide for Units with Flush Mount and Recessed Sills

MARVIN®
Windows and Doors

Built around you.®

2011-05-10
19970305

Safety, installation and care guidelines for the Ultimate Marvin Lift and Slide Door

- Ultimate Lift and Slide door panels (approximately 7 lbs/sq. ft.) can be very heavy and awkward to handle, use appropriate assistance and safety procedures.
- Use industry best practice methods to flash and seal all doors at the exterior perimeter.
- Sealants used for installation must be Grade NS Class 25 per ASTMC920 and compatible with the building exterior, door exterior surface, and flashing/water management materials.
- Flashing materials must comply with ASTM E2112-01, section 5.13 and be compatible with all materials used in installation including panning systems, air barriers and building papers, sheathing, and the door unit.
- It is the responsibility of the builder, installer and subcontractors to protect the interior and exterior of the Ultimate Lift and Slide Doors from contact with harsh chemical washes, construction material contamination and moisture. Damage to glazing, hardware, weather strip and cladding/ wood can occur. Protect with painters tape and/or protective sheathing as required. Follow all guidelines regarding material use, preparation, personal safety and disposal.
- Contact your Marvin dealer if you have any questions regarding product and materials used in manufacturing or questions on replacement parts.

Aftermarket Products

- Alterations to Marvin door products including films, insulating or reflective interior door treatments or additional glazings can cause excessive heat buildup and/or condensation. They may lead to premature failures not covered under warranty by Marvin.
- Before purchasing or applying any product that may affect the installation or performance of Marvin products contact the manufacturer of aftermarket product/ glazings that are not supplied by Marvin and request written product use, associated warranties and damage coverage. Provide this information and warranties to the end user and/or building owner for future reference.

Before You Begin

- Prior to commencing installation inspect the opening per your project's drawing and field calculations to ensure the opening has been prepared correctly. Use the Site Preparation checklist as a guide. Make sure that all necessary personal protection equipment is available for the task(s) to be performed. Due to the large size and weight of the panels, special handling equipment and/or additional assistance will be required during installation and handling of the panels. Lift and Slide panels can exceed 600 pounds per panel.
- The recessed sill must be flat and level within 1/32″ (1) and for pocket configurations must be orientated a specific distance from the inside surface of the interior wall. The position of the sill is critical to the installation and performance of the Lift and Slide System.
- Installation of a recessed sill by encasing the sill during the main concrete pour prior to the door installation removes any opportunity for sill adjustment after the pour and prior to the panel installation. Marvin Windows and Doors does not recommend recessed sill installation without a slot due to the inherent risks of not being able to able to adjust the sill track after the panel installation.
- When your Ultimate Lift and Slide system is delivered, place the system in a safe location near the opening to avoid unnecessary handling. Unwrap and inspect all components for damage or missing parts. If there are any missing and/or damaged parts, please contact your local Marvin representative.
- When testing the operation of the operating panels the flush mount handle may not fully engage into the upright position until the finished floor has been installed

YOU WILL NEED TO SUPPLY

Laser level or equivalent	Step ladder(s)
Hammer	Power Driver w/bits
Concrete drill w/bits	Allen wrench 1/4″ and 5/32″
Sealant w/gun	
Additional story poles (if desired)	
Glass suction cups (2 – 4)	
Installation screws for Recessed sill or Flush sill, whichever is applicable	
Leveling screws (available from Marvin) for Recessed sill, if applicable	
3/8″ ID flexible tubing w/elbows for Recessed sill with drainage	
#8x1 1/2″ pan head screws for pocket interlock, if applicable	
#8x3″ pan head screws for pocket interlock, if applicable	

INDEX

INDEX	Page
Slot depth and recess specifications	3
Sill system	3
Frame assembly with pocket	5
Frame assembly stacked	6
Place the frame and/or head jamb into the opening	7
Pocket doors – installation of interlock base	8
Pocket doors – installation of pocket interlock	8
Installation of the panels	9
Flooring	11
System sealing and caulking	12
Stationary retainer placement template	12
Installation completion checklist	13

NOTE: Numbers listed in parentheses ( ) are metric equivalents in millimeters rounded to the nearest whole number.

ATTENTION: Specifications and technical data are subject to change without notice.

Ultimate Lift and Slide Assembly Kit

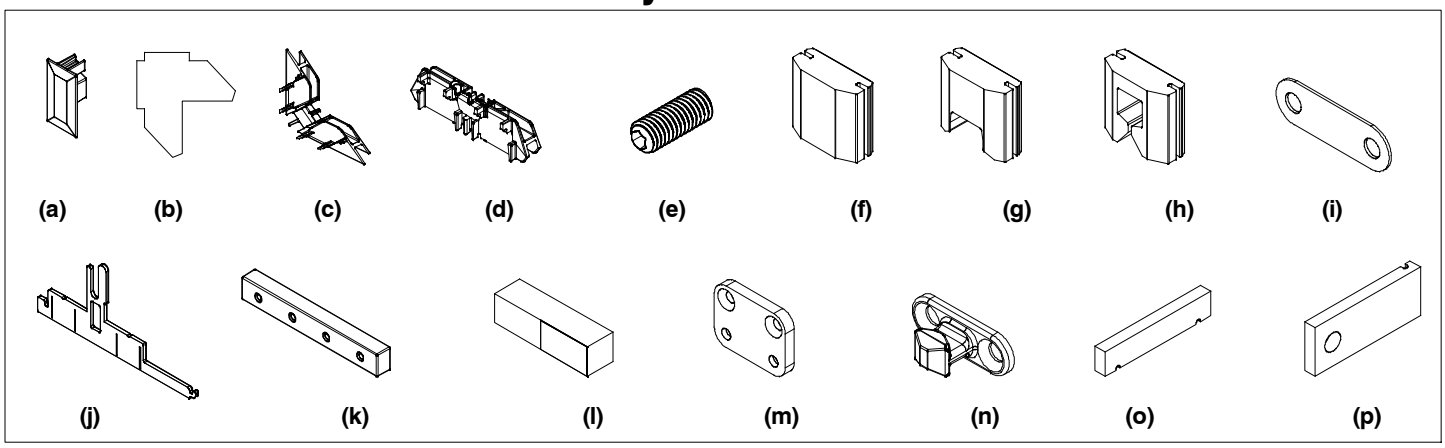

ID.	Description	Part Number	Usage
(a)	**Header Guide End Cap**	02102119	Quantity based on number of open end header guides (1/open end header guide)
(b)	**Nailing Fin Corner Gasket Sheet**	11869519	Quantity based on unit configuration (1/stacked unit) clad only
(c)	**Corner Key, Head Jamb**	02102282	Quantity based on unit configuration (1/corner) clad only
(d)	**Frame Splice Key**	02102122	Quantity based on size of unit (1/splice) clad only
(e)	**Jamb Shim Screw**	02102120	Quantity based on size of unit (1/tapped hole in jamb(s))
(f)	**Foam Seal**	10500086	Quantity based on unit configuration (1/jamb bottom)
(g)	**Foam Seal Header Stationary**	10500088	Quantity based on unit configuration (1/stationary jamb)
(h)	**Foam Seal Header Guide Track**	10500087	Quantity based on unit configuration (1/locking jamb)
(i)	**Locking Bolt Shim**	02102127	Quantity based on number of locking bolts (3/locking bolt)
(j)	**Recessed Sill Splice Gasket**	10500055	Quantity based on number of sill splices (1/sill splice) recessed sill only
(k)	**Sill Splice Key**	02102114	Quantity based on number of sill splices (2/sill splice) recessed sill only
(l)	**XX Meeting Stile Foam**	10500057	Quantity based on unit configuration (2/bi-parting unit)
(m)	**Stationary Bracket**	02102124	Quantity based on unit height (used only on stacked units)
(n)	**Locking Bolt**	02102244	Quantity based on unit configuration and height (1/pre-drilled rout)
(o)	**Sill Track Gauge**	02102386	Used for sill track spacing (order separately)
(p)	**Stationary Retainer Placement Guide**	02102385	Used for stationary retainer placement (order separately)
	#8 X 1/2″ Flat Head Self Tapping Screw	02100325	Quantity based on number of recessed sill splices (8/sill splice)
	#7 X 2″ Screw	11800720	Quantity based on unit configuration wood BMC (1/corner), pocket cover (1/pre-drilled hole)
	#8 X 1″ Screw	11800645	Quantity based on number of frame cladding splices (2/splice)
	#8 X 1 1/2″ Screw	11881120	Quantity based on number of jamb corners (1/corner) and stationary brackets (2/bracket)
	#8 X 1 1/4″ Screw	11808114	Quantity based on number of head jamb splice brackets (8/bracket)
	#8 X 3″ Screw	11800830	Quantity based on number of jamb corners and unit size, wood BMC (1/corner)
	#8 X 3″ Screw (SS)	11800858	Quantity based on number of locking bolts (2/locking bolt)
	#10 X 1″ Screw	02050526	Quantity based on size of unit (used when header guide is spliced)
	#8 X 1 1/2″ Screw	11865175	Quantity based on unit height (used on locking jamb keeper guide and stationary jamb keeper guide) (1/pre-drilled hole)
	#10 X 3″ Screw	02100427	Quantity based on number of jamb shim screws (1/jamb shim screw)
	#8 X 3/4″ Screw	11808340	Quantity based on unit configuration part stop (1/pre-drilled hole) clad only
	5/16″ x 3/4″ Sill leveling screw, Allen head	02100326	Used to level recessed sill (2 per 16″ of sill track) (order separately)
	5/16″ x 1 1/4″ Sill leveling screw, Allen head	02100327	Used to level recessed sill (2 per 16″ of sill track) (order separately)
	5/16″ x 1 1/2″ Sill leveling screw, Allen head	02100328	Used to level recessed sill (2 per 16″ of sill track) (order separately)
	Story Pole	N/A	Used to set height of head jamb (1/order)

NOTE: Assembly kit may include extra components since kits cover a range of sizes and configurations.

Slot Depth and Recess Specifications

Reference field calculations and drawings for unit specifications. For the drainage sill option make sure that the sill drainage tube(s) can be integrated with the structures drainage system. The recessed sill requires an overall slot recess of 2 5/8″(67) measured from the top of the finished floor. The sub-floor slot recess is determined by subtracting the finished flooring thickness from 2 5/8″(67). This dimension allows for one inch of adjustment space below the bottom of the sill track.

Slot Recess Chart

Finished Flooring Thickness	Sub-Floor Slot Recess
1/2″ (13)	2 1/8″ (54)
3/4″ (19)	1 7/8″ (48)
1″ (25) Maximum	1 5/8″ (41)

NOTE: Standard finished flooring thickness for determining the sub-floor slot recess. The maximum finished floor thickness above sub-floor is 1″(25).

Slot Depth Chart (2″ (51) deeper than sill depth)

Number of Tracks	Pocket Slot Depth	Stacked Slot Depth
1	6″ (152)	N/A
2	9 13/16″ (249)	8 13/16″ (224)
3	13 5/8″ (346)	12 5/8″ (321)
4	17 1/2″ (445)	16 1/2″ (419)

2 Tracks Wide, Recessed Sill with Drainage - Pocket Unit

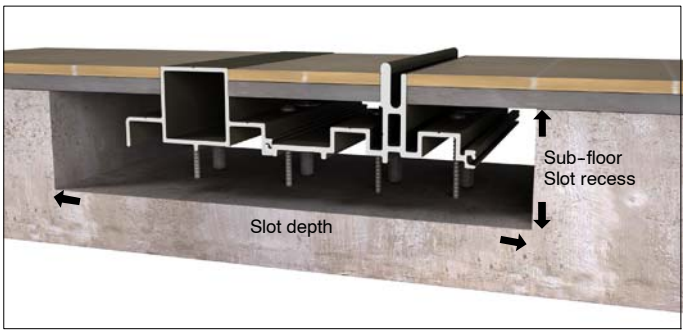

2 Tracks Wide, Recessed Sill with Drainage - Stacked Unit

Sill System

The Marvin Lift and Slide door has several sill options. The recessed sill requires assembly prior to positioning in the opening. The flush mount sill is inlaid directly into the finished floor and does not require assembly. Regardless of sill type, after complete installation, the sill track should protrude 3/16″ (5) above the finished floor and be level across the entire length within 1/32″ (1).

Ultimate Lift and Slide Sill System Installation

- Determine the finished floor height location, taking into account any anticipated floating of the flooring material. Mark that location near the opening for future reference.
- The Marvin recessed sill system features integrated sill leveling screws.

Recessed Sill Assembly

1. Lay out the recessed sill in the correct configuration on a flat surface next to the recessed sub-floor slot. Sills should be spliced together prior to connecting in parallel. It is important that this be done prior to connecting sills together.

   NOTE: For units with spliced recessed sill sections, assemble the sill sections at the splice using supplied splice brackets, gasket, and screws. See figure 1.

2. Starting from the interior and with the longest track, connect the tracks together and install appropriate length leveling screws in each rivet nut. See figure 2.

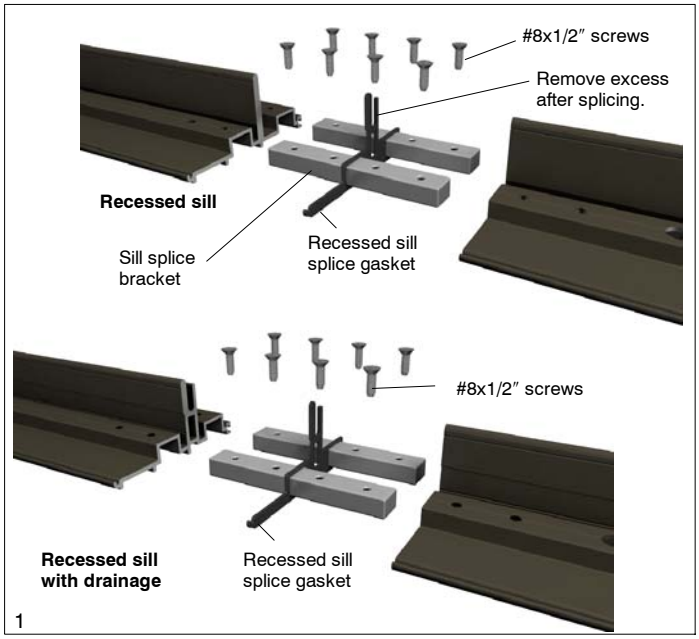

3. If using recessed drainage sill option, install appropriate length flexible 3/8″ (10) inside diameter (ID) tubing and necessary fittings in order to access foundation drainage system. See figure 3.

NOTE TO INSTALLER: Place a section of an aquarium filter over the weep hole of the sill and also into the exhaust end of the drainage tube.

Position Sill in the Opening

1. **Pocket systems at Interlock**: The distance from the center of the exterior track to the finished inside surface of the exterior pocket wall is 2 11/16″(68). See figure 4.

Note: The 2 11/16″ (68) dimension is applicable for all sill options. Recessed sill with drainage is shown.

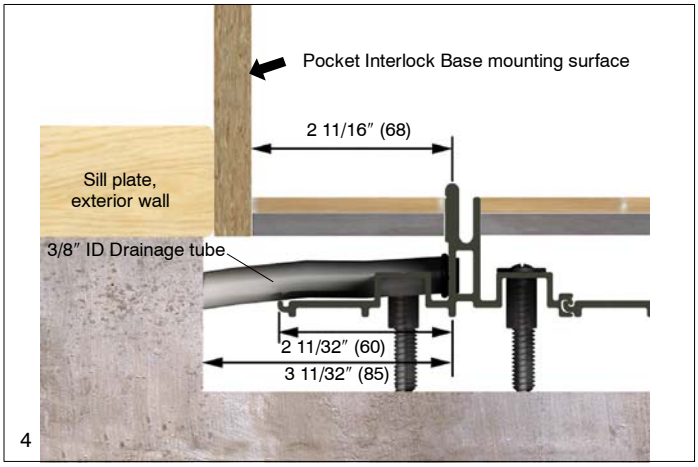

2. **Systems with side jambs**: Insert the side jamb(s) into the rough opening (RO) and position in desired location. Position the interior sill track 1 9/16″ (40) in from the interior side of the door jamb. See figure 5. Position the end of the track 1/2″ (13) in from the edge of the rough opening.

Note: The 1 9/16″(40) dimension is applicable for all sill options. Recessed sill is shown.

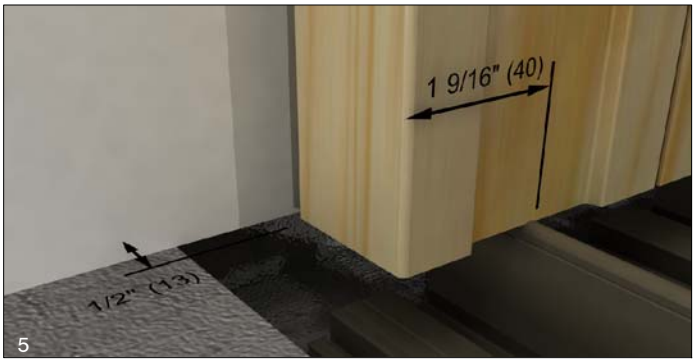

3. For recessed sills, start at side jamb end, level sill until the finished floor alignment groove on the sill track is at the finished floor height mark established earlier. With a laser level as a guide use a 5/32″ Allen wrench to adjust the sill leveling screws on both sides of the track. At the pre-drilled holes next to the sill leveling screws insert anchor screws and tighten. See figure 6.

4. Continue this process until the sill track finished floor alignment groove is at the correct height and the recessed sill is within 1/32″ (1) of level across the entire length of the track. Recommend using the Sill Track Gauge on units with multiple sill tracks, item (o) on page 2, to ensure that the distance between the tracks is exact.

5. For flush mount sills, position the sill in the opening 2 11/16″ (68) from the center of the exterior track to the finished inside surface of the exterior pocket wall (reference step 1) and/or 1 9/16″ (40) in from the interior side of the door jamb for the interior track (reference step 2). Recommend using the Sill Track Gauge to position multiple tracks, item (o) on page 2. Mark sill position and rout the finish floor to accept the flush mount sill such that the sill is level within 1/32″(1) across the entire length. Secure with flat head screws through each pre-drilled hole in the sill. See figure 7.

Frame Assembly with Pocket

NOTE: Assemble to the interior of the opening.

NOTE: For units with multiple head jamb sections, assemble the head jamb sections at the splice using supplied screws, brackets, and keys. Apply 3/16″(5) bead of sealant on all wood joints prior to assembly. For clad units, notch a 1/8″ (3) deep groove at the head jamb for proper sealant flow prior to injecting sealant into clad splice key. See figure 8.

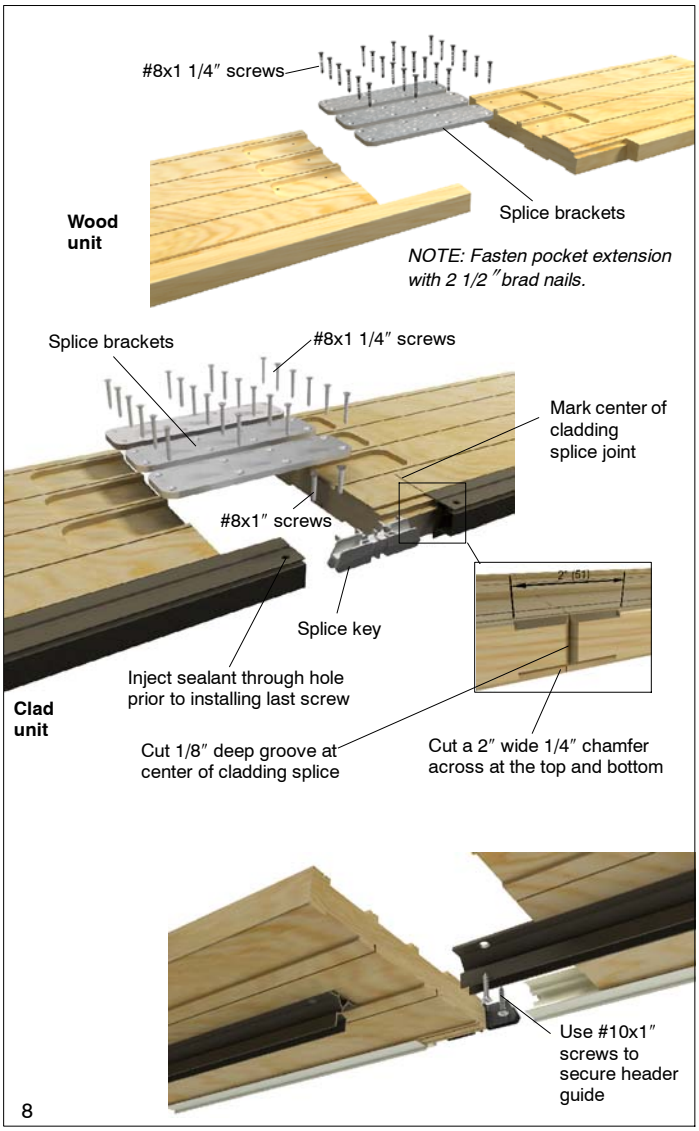

8

1. Place head jamb and side jamb, interior side down, on a clean flat surface to the interior side of the opening in the correct configuration. Make a small mark on the bottom of the interior face of the side jamb 1 9/16″ (40) from the interior edge the jamb. This mark will be placed directly on top of the interior track. See figure 9.

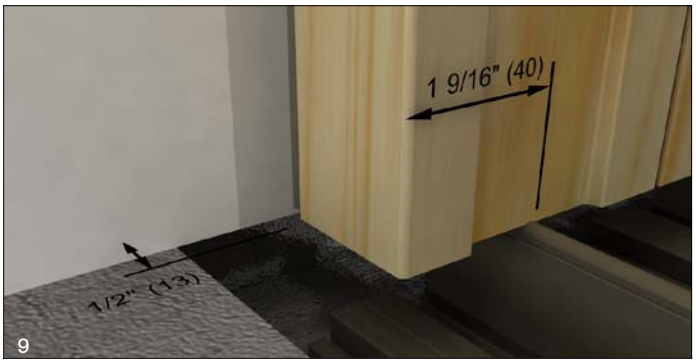

9

2. Install adjustable shim screws into the head jamb and side jamb with 1/4″ Allen wrench. See figure 10.

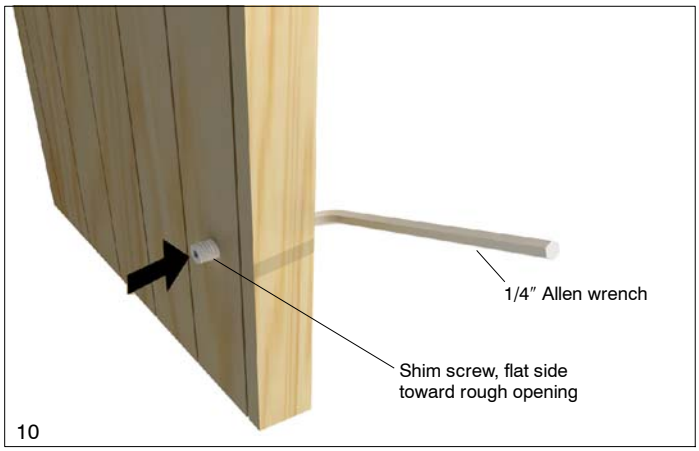

10

HINT: To assist in unit alignment place side jamb in the opening with mark on top of the sill track and adjust shim screws to align back of jamb with the end of the sill. Adjust shim screws until jamb is plumb.

3. Run a 3/16″ (5) bead of sealant on all wood joints prior to assembly. Assemble the corner and fasten with the supplied screws through all of the pre-drilled holes. See figure 11 for clad and wood.
4. On clad units, before installing the screw into the clad corner joint, inject sealant into the screw hole until you can see squeeze out. See figure 11.

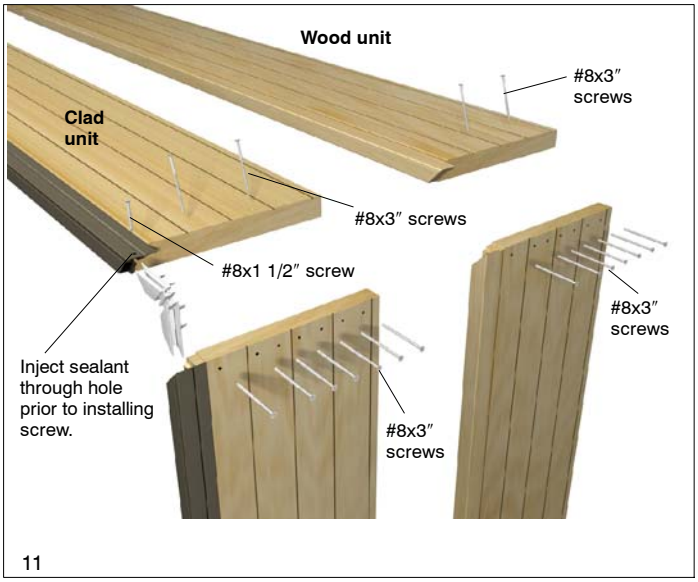

11

Frame Assembly Stacked

NOTE: Assemble to the exterior of the opening

NOTE: For units with multiple head jamb sections assemble the head jamb sections at the splices with the supplied screws, brackets, and keys. Apply 3/16″ (5) bead of sealant on all wood joints prior to assembly. For clad units, notch a 1/8″ (3) deep groove at the head jamb for proper sealant flow prior to injecting sealant into clad splice key.
See figure 12.

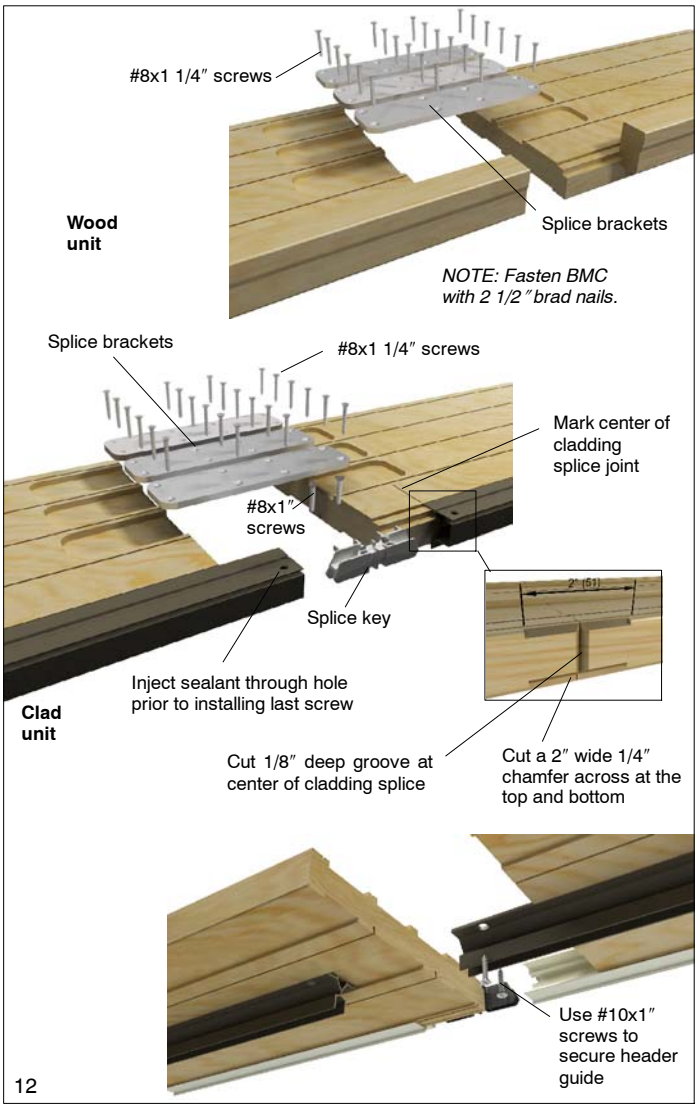

1. Place head jamb and side jambs, interior side down, on a clean flat surface to the exterior side of the opening in the correct configuration. Make a small mark on the bottom of the interior face of the side jambs 1 9/16″ (40) from the interior edge the jamb. This mark will be placed directly on top of the interior sill track. See Figure 13.

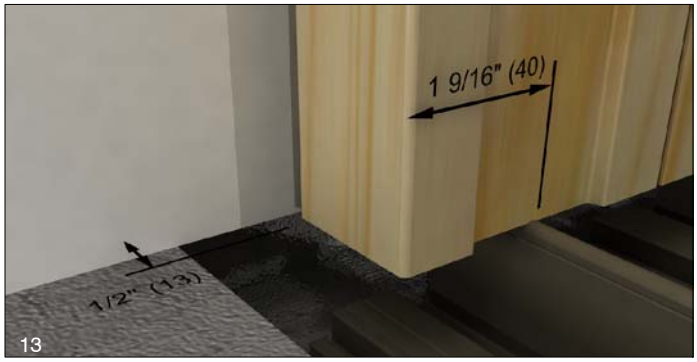

2. Install adjustable shim screws into the head jamb and side jamb with 1/4″ Allen wrench. See figure 14.

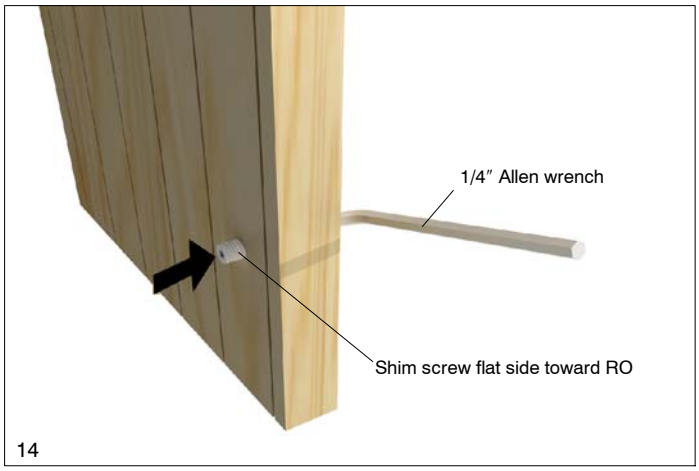

HINT: To assist in unit alignment place side jamb in the opening with mark on top of the sill track and adjust shim screws to align back of jamb with the end of the sill. Adjust shim screws until jamb is plumb.

3. Run a 3/16″ (5) bead of sealant on all wood joints prior to assembly. Assemble the corner and fasten with the supplied screws through all of the pre-drilled holes. See figure 15 for clad and wood.
4. On clad units, before installing screw into the clad corner joint, inject sealant into the screw hole until you can see squeeze out. See figure 15.

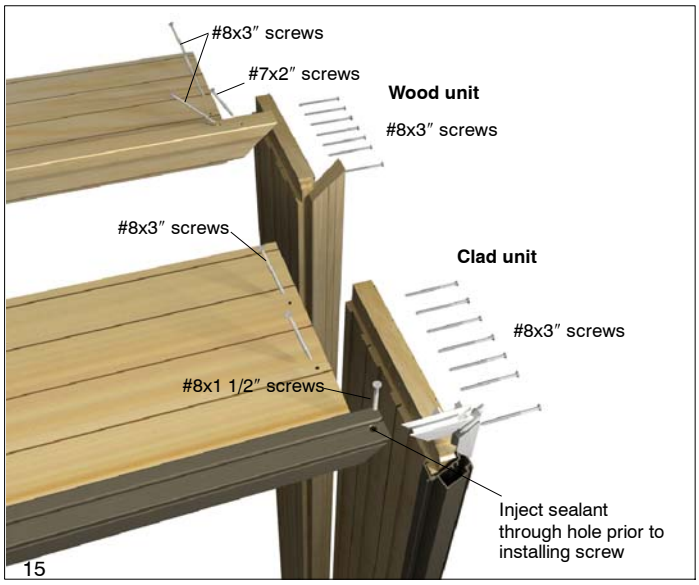

Place the Frame and/or Head Jamb into the Opening

The necessary precautions must be considered and applied to safely support the frame within the opening during installation.

Pocket Units without Side Jamb

1. Raise and position header guide directly over bottom sill track using laser to align. See figure 16.
2. Support the head jamb in position with the story pole(s) at the center and appropriate intervals thereafter. See figure 17.
3. Adjust head jamb shim screws so that the header guide bottom edge is just touching the story pole and fasten with installation screws. See figure 20.

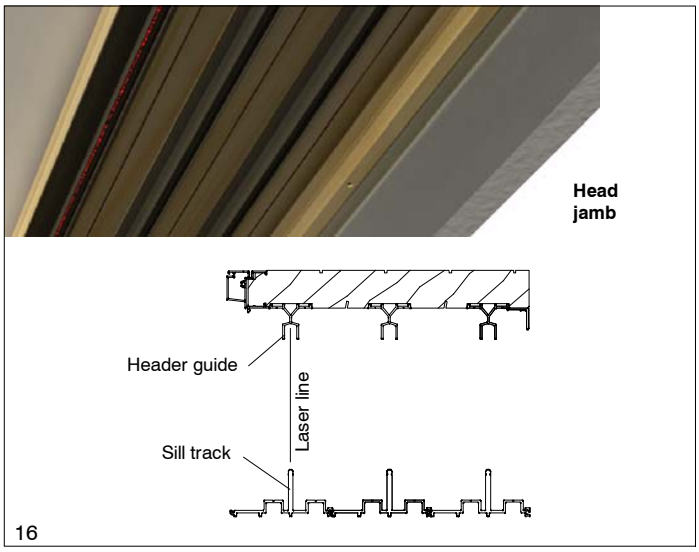

HINT: Additional story poles of greater width can be cut to sit over two or more sill tracks to assist in ease of installation.

Units with Side Jamb(s)

1. Raise and position the frame assembly within the opening on top of the sill track.
2. Support the head jamb in position with the story pole(s) at the center and appropriate intervals thereafter. See figure 17.

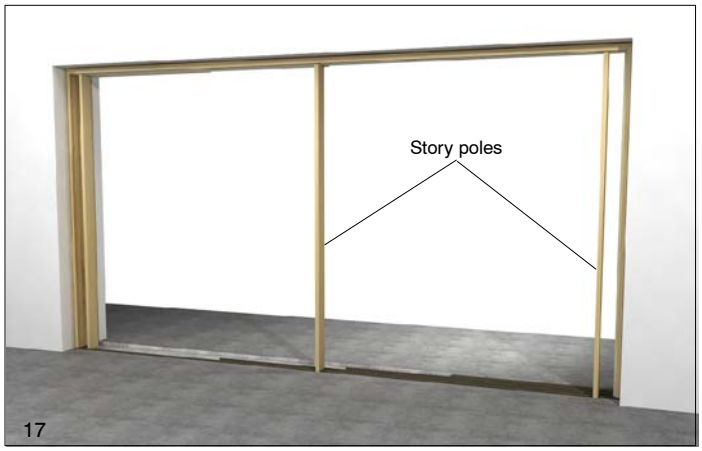

3. Start at the bottom of the locking side jamb and align center mark on the jamb with the center of the interior sill track. See figure 18.

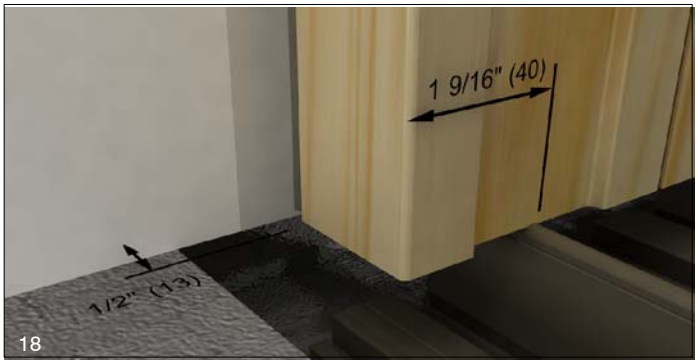

4. Adjust bottom jamb shim screw using a 1/4″ Allen wrench until the back side of the jamb is flush with the end of the sill track. Anchor bottom of the jamb in place with an installation screw. See figure 19.

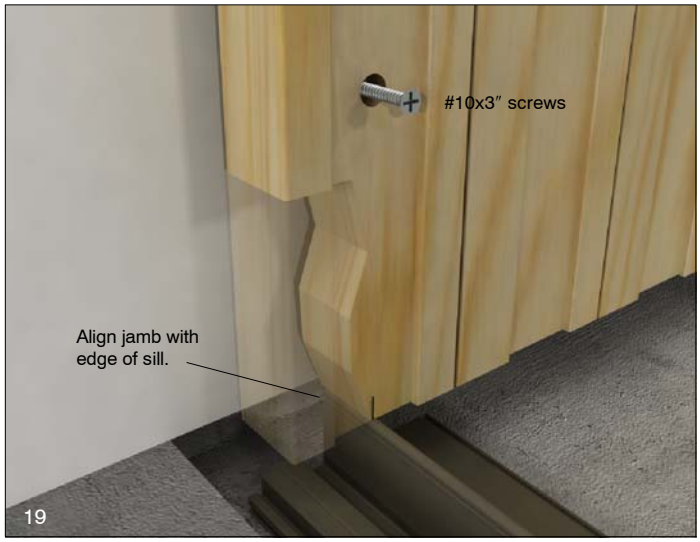

5. Position header guide directly over bottom sill track using laser to align. Plumb and true the side jambs, adjusting shim screws as needed, and anchor the top corner. See figure 20. For stacked units follow the same procedure for the other side jamb.
6. Adjust head jamb shim screws so that the header guide bottom edge is just touching the story pole and fasten with installation screws. See figure 20.
7. Install all remaining installation screws in side jambs.

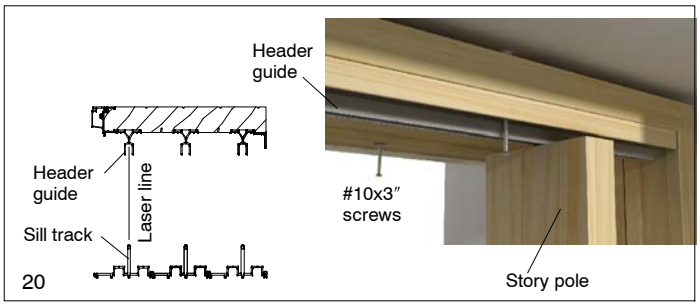

Pocket Doors – Installation of Interlock Base

1. Place interlock base into position on exterior wall frame member with the gasket to the bottom. Push up on the interlock base until it is tight up against the head jamb and flush with exterior edge of the rough opening framing member. Drill pilot holes in the center of the narrow slot at the top, center and bottom of the interlock base with a 1/8″ drill bit. See figure 21. Insert #8x1 1/2″ pan head screws and loosely tighten.

21

2. Check the interlock base for plumb and adjust location to conform to exterior frame width specification provided in the field calculations. See figure 22. After alignment tighten interlock base screws.

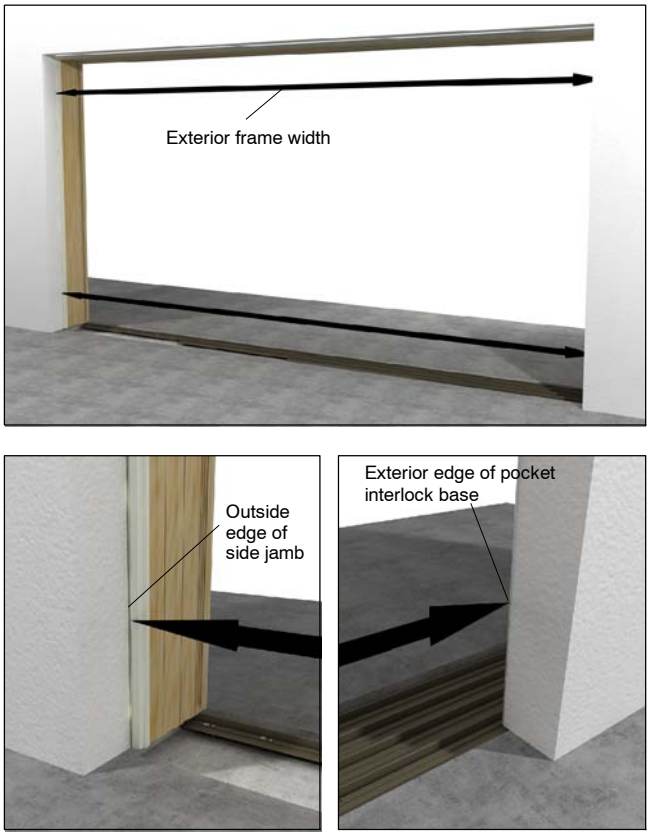

22

Pocket Doors – Installation of Pocket Interlock

1. Adjust all of the pocket interlock set screws to the same reveal. See figure 23.

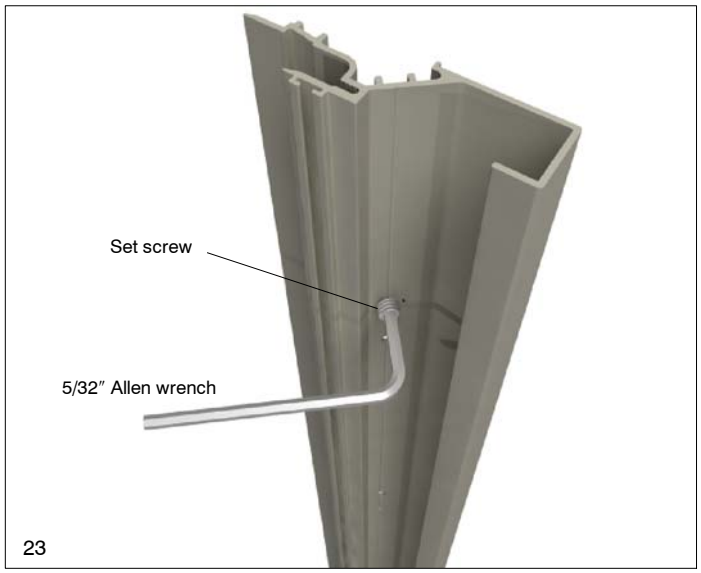

23

2. Orient the pocket interlock with the stepped side up over the top of the interlock base and slide it up against the head jamb. See figure 24. Fasten in several locations to hold in place while adjusting set screws.

24

3. Adjust interlock set screws until the interlock is plumb, true and parallel to the track and head jamb. Secure using #8x3″ pan head screws. See figure 25.

25

Installation of the Panels

1. From the field calculations and drawings, determine which panel goes on which sill track. The panels are set in the same manner as any conventional sliding door system, stationary or pocket to the exterior (first) and primary to the interior (last).

2. For pocket door systems proceed to step 5. For stacked units install stationary jamb keeper guide over the stationary jamb adjustable shim screws and secure with #8x1 1/2″ screws. See figure 26.

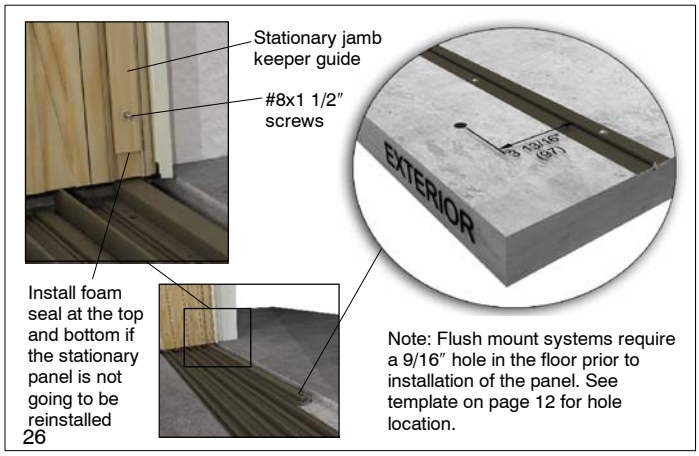

3. Install stationary panel from the exterior. Tilt top into place and slide bottom of panel onto stationary track or floor. Slide stationary panel back tight against the side jamb and fasten stationary bracket to jamb with #8x1 1/2″ screws. See figure 27.

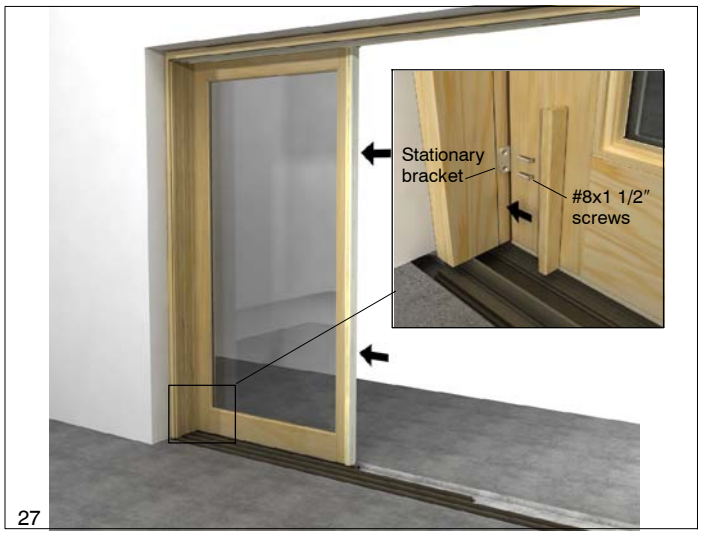

4. Adjust and secure head and sill stationary retainers to engage with head jamb and sill/floor. See figure 28.

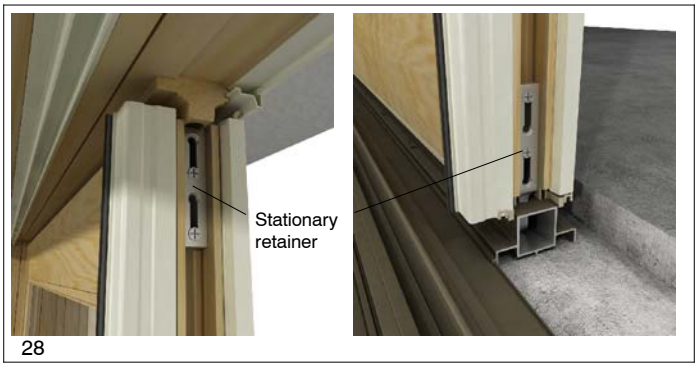

5. Install operator panel top rail weather strip prior to installing the panels. For XX configuration install meeting stile foam on bottom of astragal assembly. See figure 29.

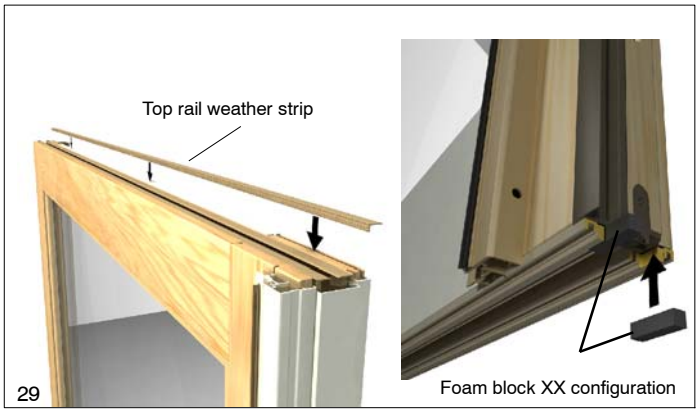

6. For pocket units install the panel that engages with the pocket interlock first. Tilt top into place and slide bottom of panel onto center of track. Engage operating hardware and test door panel to see if the rollers are on the track. Install pocket cover with #7 x 2″ screws. See figure 30. The flush mount handle may not fully engage until the finished floor has been installed.

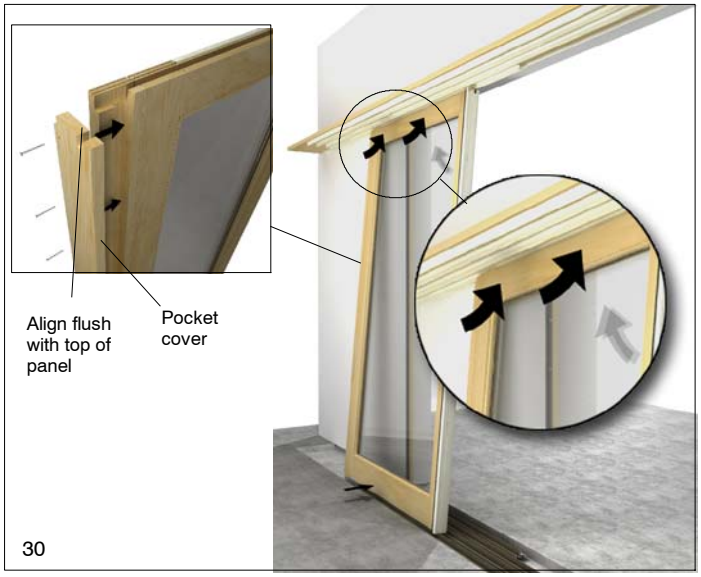

7. Test operation of the panel to see that it is engaging with the pocket interlock properly. If adjustments are necessary remove stile edge cover and header guide with insert. Slide panel back into the pocket to adjust the interlock. See figure 31.

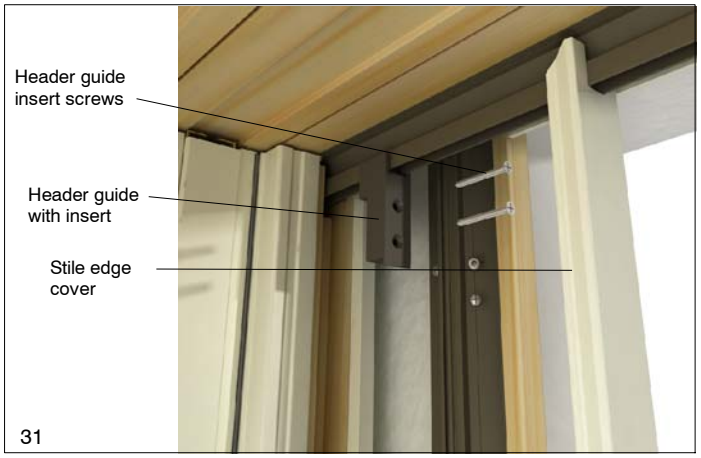

8. All operating panels are installed from the interior. Slide the top of the panel in over the header guide, center the bottom of the panel over the sill track and set down. Engage operating hardware and test door panel to see if the rollers are on the track. If not repeat procedure. Each door should interlock the next panel in the proper sequence. See figure 32.

32

9. Once all of the panels are installed operate the doors to ensure smooth movement and correct positioning of the pocket interlocks, head jamb, and side jambs. Install header guide end caps. See figure 33.

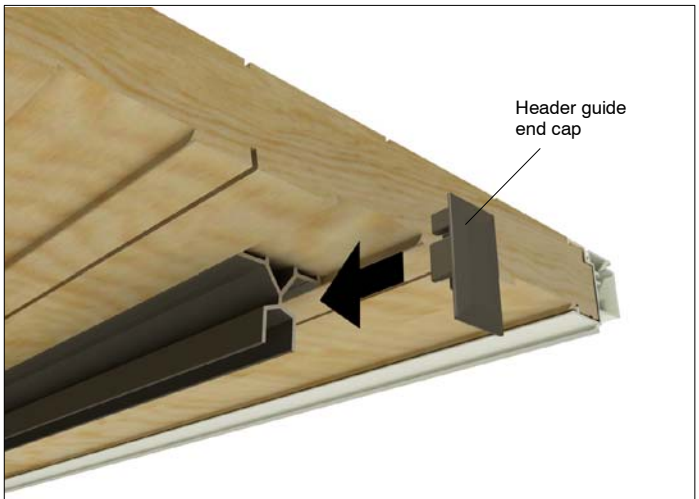

33

10. Install head jamb exterior stops by pressing or tapping them into place with a rubber mallet. Secure clad stops into place with #8x3/4″ truss head screws in pre drilled holes and wood stops with finish nails . See figure 34.

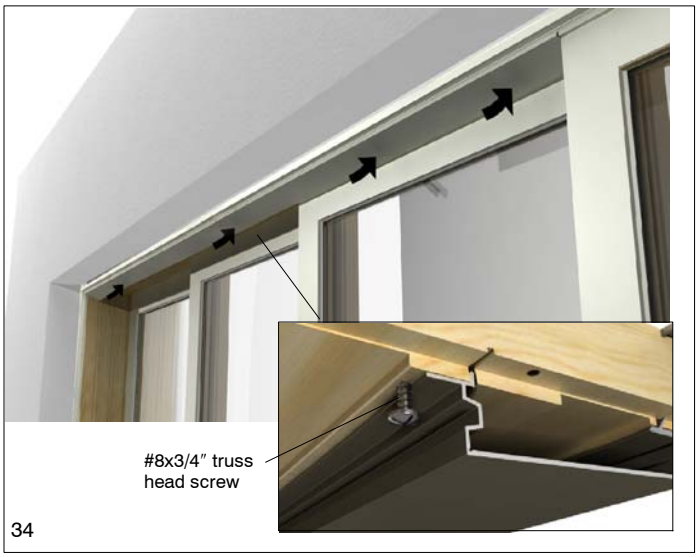

34

11. Install side jamb exterior stops by pressing or tapping them into place with a rubber mallet. Secure clad stops into place with #8x3/4″ truss head screws in pre drilled holes and wood stops with finish nails. See figure 35.

35

12. Install locking jamb keeper guide over the side jamb adjustable shim screws and secure with #8 x 1 1/2″ screws. See figure 36. Position and fasten locking bolts with #8 x 3″ screws. Adjust locking bolts with shims provided if necessary.

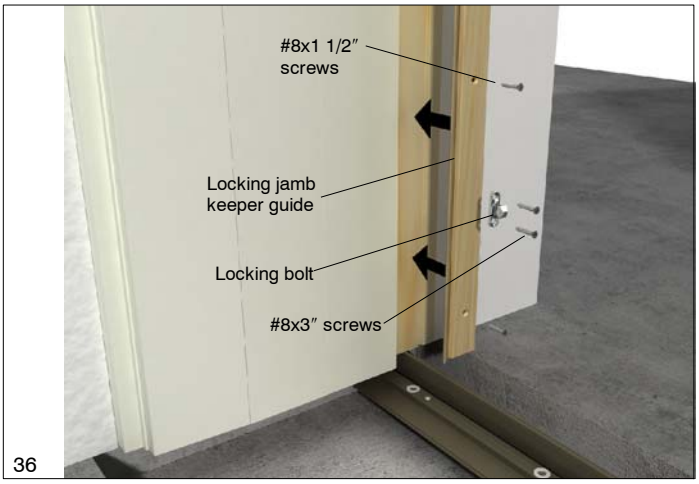

36

13. Install foam seal at header guide track(s). See figure 37.

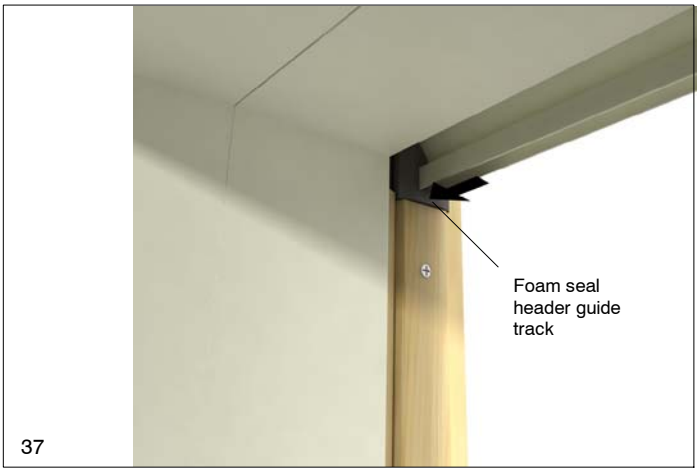

37

Flooring

1. Explain to the flooring contractor the operation and sill requirements of the lift and slide door system prior to flooring installation. The flooring needs to be installed in such a manner as to leave exactly 3/16″ (5) of the track exposed above the finished floor. Proper drainage requires the following: See figure 38.
   a. The exterior floor should be sloped 1/4″ (6) per foot starting at the exterior of the sill track.
   b. If installing a recessed sill with drainage, the drainage system should be plumbed to the exterior of the structure prior to filling the sub-floor slot recess with self leveling concrete free of chlorinated additives.
   c. The sill track must be protected from damage and contamination prior to filling the sub-floor slot recess with self leveling concrete. Extra care should be taken to protect the drainage system.
   d. Moisture sensitive flooring, such as wood, should not be located any closer than a minimum of 24″(610) to the interior side of the sill system.

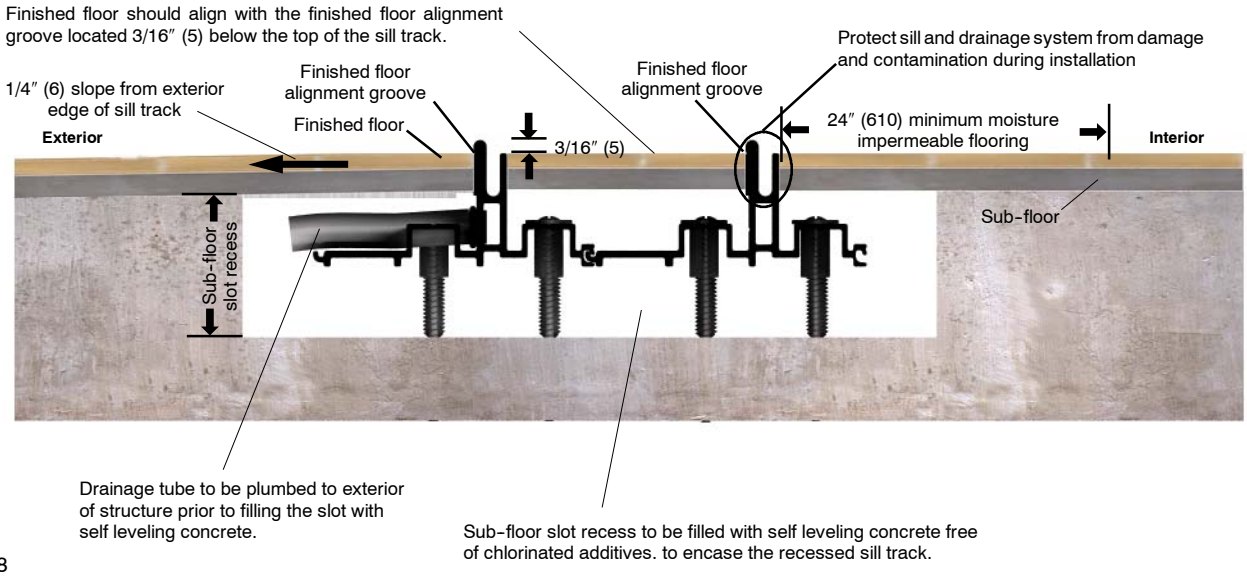

38

Use a self leveling concrete free of chlorinated additives to fill the sub-floor slot recess and encase the sill track to the height level with the sub-floor. Installation of the flooring may proceed after the self leveling concrete has cured adequately according to the manufacturer's specifications. The finished floor surface must align with the finished floor alignment groove located on the sill to ensure the required 3/16″ (5) clearance.

System Sealing and Caulking

1. Once the floor is installed, apply caulk at the gap between the finished floor and the side jambs. See figure 39.
2. Weatherproofing and integrating the jambs and interlocks to the building can be addressed in most cases by using backer rod and sealant in recessed openings. Weatherproofing such as a butyl flashing material may be appropriate for doors installed with a nailing fin.
3. Units with side jamb(s) require installation of a foam seal under the bottom of the jamb keeper guide. See illustration 39.

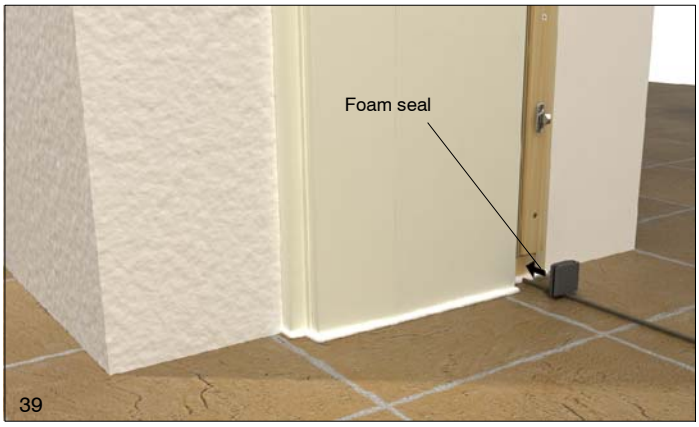

Your Marvin Ultimate Lift and Slide system is now installed. Minor adjustments of the system are limited to the shim screws located in the head and/or side jambs. The opening trim and perimeter insulation must allow for minor adjustments that may be necessary in the future. A compressible insulation material should fill the perimeter space between the frame and rough opening. The interior or exterior trim, such as a “J” channel, should be installed 1/4″– 3/8″ (6–10) from the jamb. The joints between the exterior trim and top guide track/side jambs should be sealed properly to allow for minor adjustments.

Stationary Retainer Placement Template

NOTE: The Stationary Retainer Placement Guide, item (p)on page 2, can be used instead of the template.

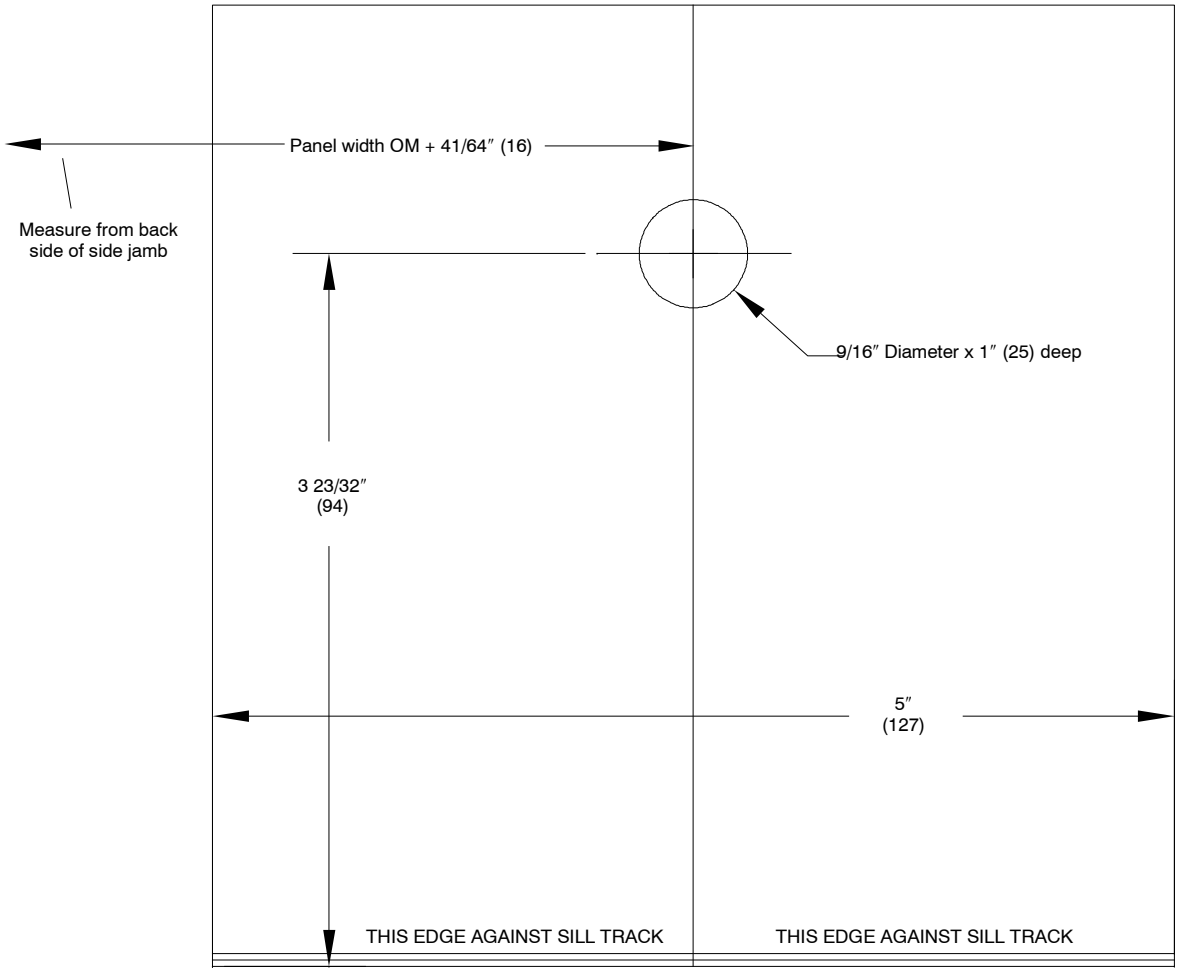

Installation Completion Checklist

Inspected	Inspection Item	Initial
	Are the panels operating smoothly? No rubbing or interference at the head jamb?	
	Is the exterior wall interlock on pocket units adjusted properly; no sticking or interference with the smooth operation of the panels?	
	Is the panel making contact evenly across the entire length of the jamb(s)?	
	Has the unit been properly integrated with the structures water management system? Water should always be directed to the exterior.	
	If inspecting the unit after the flooring has been installed is the track exactly 3/16″ (5) above the floor surface?	
	Does the exterior floor slope away from the door?	
	If there is a wood interior floor is it at least 2′ (610) from the interior side of the track?	
	Has the final sealant been applied between the floor and jambs of the unit?	
	For units with keyed handle, install per instructions supplied with the handle.	