Ultimate Double Hung and Ultimate Double Hung Magnum Picture and Transom Supplemental Installation Instruction

These instructions contain important installation, finishing, and homeowner information. Please keep these instructions with the window, to be removed only by the homeowner. Use this supplemental instruction in conjunction with the enclosed installation instruction.

NOTE: Numbers listed in parentheses ( ) are metric equivalents in millimeters rounded to the nearest whole number.

Picture Unit Installation

Picture Unit Standard Parts Shipped		
Quantity	Description	Part/Profile Number
1 each	Picture unit with sash	Per order
1 set	Sash stops	Per order
Sheet of 4	Corner gasket	11869519
1 package (Magnum unit only)	40-#8 x 2 1/2" Torx™ head screws 1- T15 Torx™ bit 40- #6 x 1 1/4" square drive trim screws	11860981
1 each	Clad or wood installation instructions	19970017 or 19970018

You Will Need to Supply	
Safety glasses	Cordless drill
Square head bit	Sealant
F16 x 1 1/8" brad nails and nail gun	

1. Remove packaging materials, staples, and shipping blocks, if any, attached to the exterior frame of the unit. See figure 1.

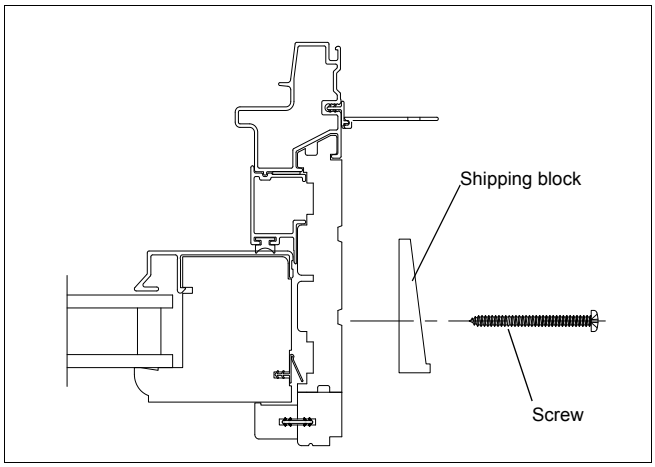

Figure 1

2. For unit with sash installed, install the units per the supplied installation instructions. If supplied, use jamb installation screws and predrilled holes in jamb. See figure 2. Proceed to step 6.

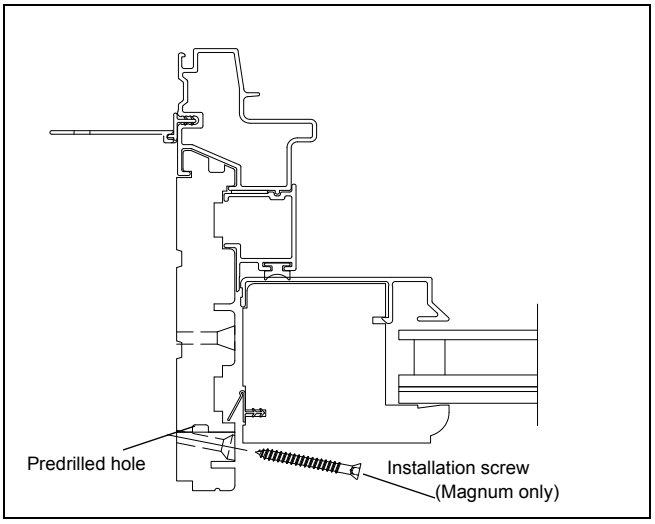

Figure 2

3. For units with sash shipped separately, secure the frame into the opening per the supplied installation instructions. If supplied, use jamb installation screws through the center of jamb. See figure 3.

4. Apply a nickel sized dollop of sealant at the corner of the sill and a bead of sealant along the sill as shown below in figure 3.

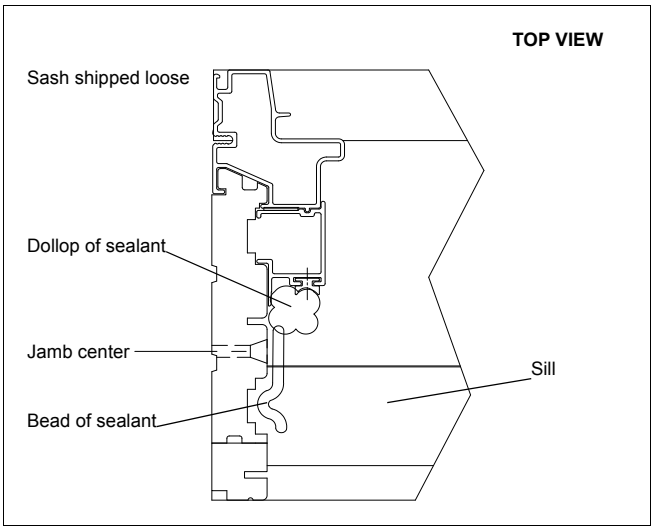

Figure 3

5. Place the bottom of the sash into the frame and tip up into place until sash is seated against the exterior stop and sash retainer fin has snapped into place. See figure 4.

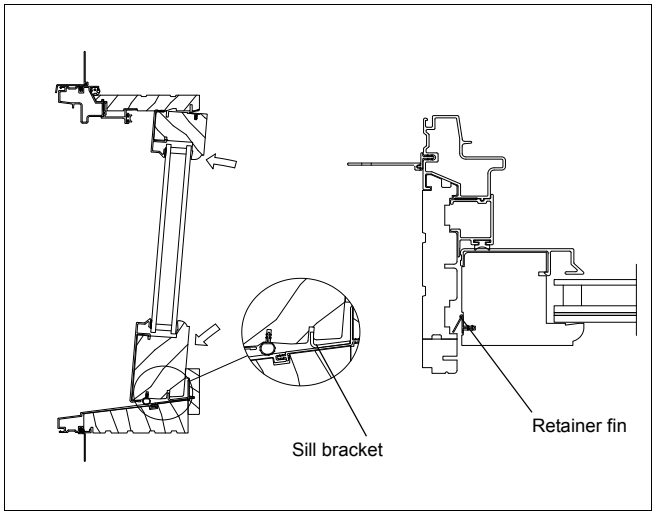

Figure 4

6. After the unit has been secured into the opening, install the supplied wood stops. On UDHMP units, use included trim head screws. See figure 5. WUDHP stops are installed with 1 1/8" (29) brad nails spaced 6"(152) from each end and 6"(152) on center.

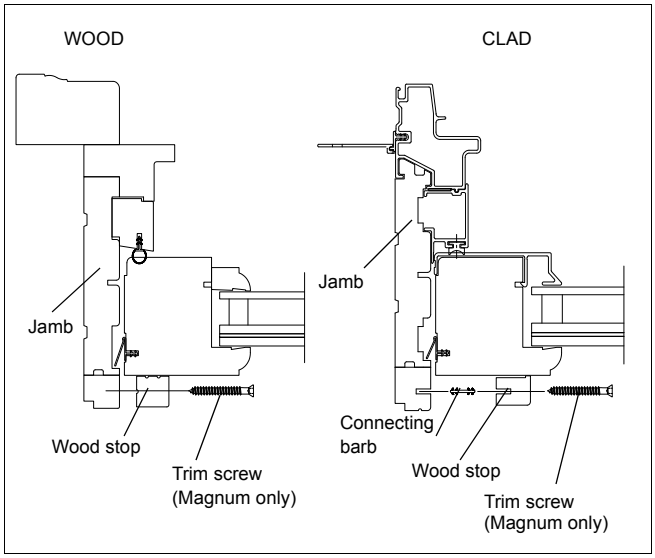

Figure 5

NOTE: Clad unit wood stops are secured with barb fasteners and wood screws. Wood unit wood stops are secured with wood screws only.

Transom Unit Installation

Transom Unit Standard Parts Shipped		
Quantity	Description	Part/Profile Number
1 each	Transom unit with sash	Per order
Sheet of 4	Corner gasket	11869519
1 package (Magnum unit only)	20-#8 x 2 1/2" Torx™ head screws 1- T15 Torx™ bit	11860971
20 each (Magnum unit only)	Wood plugs	0207845
1 each	Clad or wood installation instructions	19970017 or 19970018

You Will Need to Supply	
Safety Glasses	Cordless drill

1. Remove packaging materials, staples, and shipping blocks, if any, attached to the exterior frame of the unit.

2. Install the units per the supplied installation instruction. If supplied, use the supplied jamb installation screws and predrilled holes in the jamb. See figure 6.

3. After the unit has been secured into the opening, use the supplied wood plug to cover the installation screws on Magnum units. See figure 6.

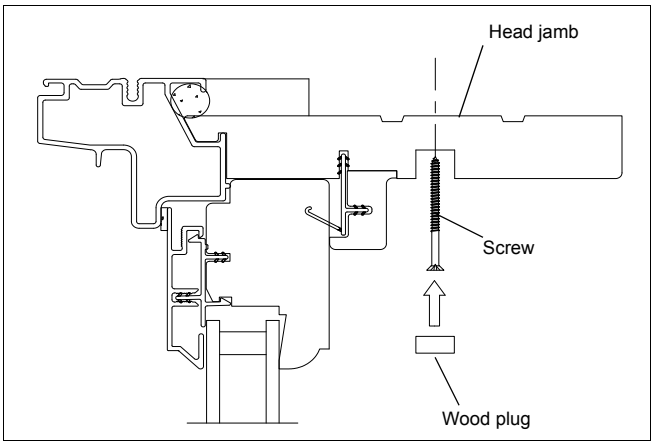

Figure 6

Hint

To secure the wood plug in place, apply a small dab of glue on one side of the plug before insertion.