Marvin Windows and Doors

Trim Set Mounting Instructions

MARVIN Windows and Doors
Built around you.®

HANDLE TO ESCUTCHEON PLATE ASSEMBLY

Attach handles to the escutcheon plates using *M5 x 12 mm Phillips head screws.* The curve of the handle should be pointed towards the glass. Interior escutcheon has a notch on the side of the plate for the *lock lever*. The notch side of the escutcheon plate is pointed toward the glass. Exterior escutcheon has a weep slot which must be located at the bottom. Tighten securely to prevent loosening during operation.

GASKET INSTALLATION

NOTE: If you are installing a keyed handle set you must remove the knock−out on the gasket for the keyed cylinder.

Install one lug seal gasket on the bottom post of the exterior escutcheon and fit the full escutcheon plate gasket over the remaining mounting posts of the exterior escutcheon.

INSTALLING EXTERIOR ESCUTCHEON PLATE

Keyed Handle Set:
Align the posts with predrilled holes and the keyed cylinder tail piece with the lockset receiver. Push tail piece through receiver until the exterior escutcheon plate is tight against exterior face of door panel. Curved portion of handle should be pointed towards glass.

Non−keyed Handle Set:
Place escutcheon plate tightly against door panel, aligning posts with predrilled holes on door panel. Curved portion of the handle should be pointed towards glass.

TEST LOCK LEVER

Test lock assembly by activating lever and key cylinder. If lock does not operate properly, remove escutcheon, rotate the lock cylinder tailpiece 180 degrees, and reinstall.

INTERIOR LEVER HANDLE/THROUGH PIN

Holding the exterior escutcheon in place, install both interior *lever handle* and *through pin* through door panel and lockset. Lever handle position should angle toward the glass.

INTERIOR ESCUTCHEON PLATE

Position interior escutcheon plate against interior panel of door panel, mounting posts aligning with holes on door panel, secure using *M5 x 55mm screws* provided. Curved portion of handle should be pointed towards glass.

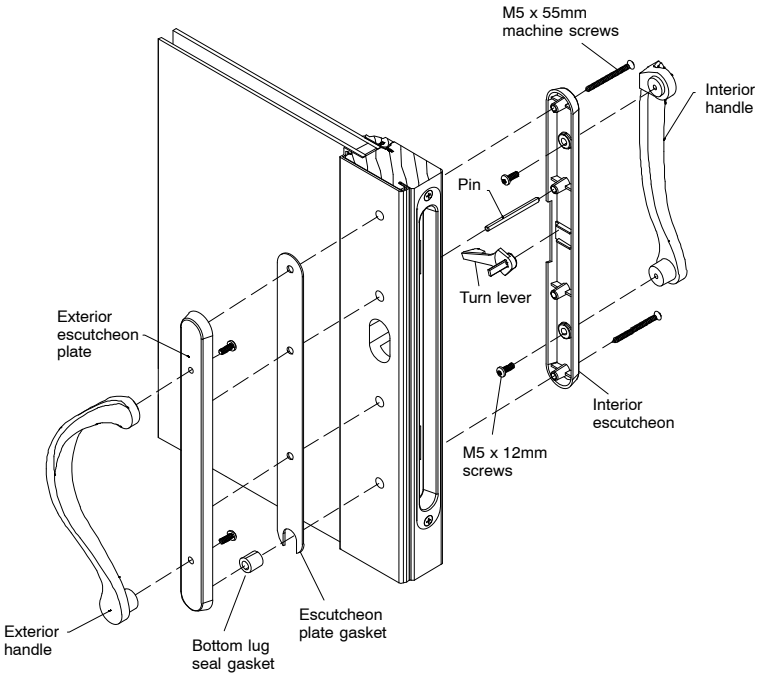

Non−keyed Handle Set

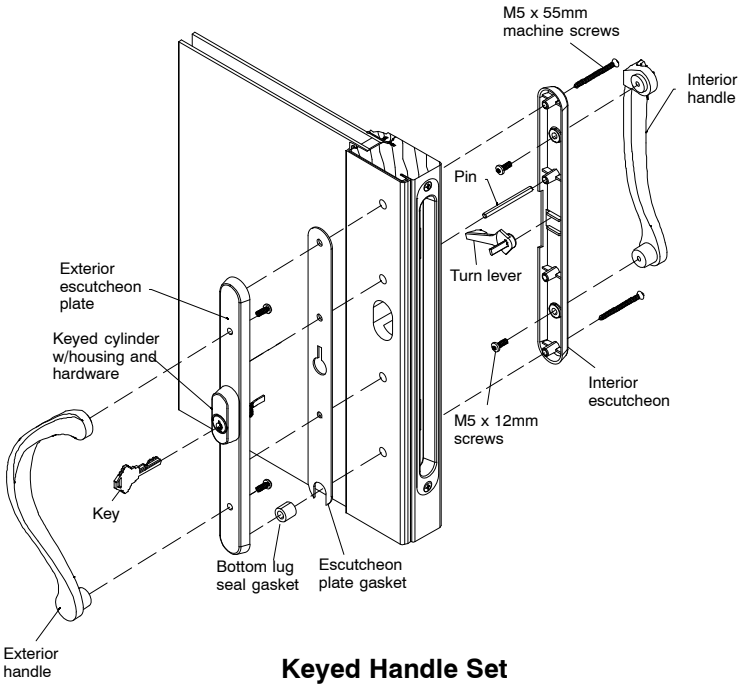

Keyed Handle Set

19970670
2014−01−21