Sliding Doors
Sliding Screen Installation Instruction

YOU WILL NEED TO SUPPLY

Tape measure	Drill/driver
3/32″ drill bit	Phillips head bit
Stiff putty knife	

Installing the Screen Panel

1. From the exterior, hold the screen with the rollers facing you while tilting the bottom of the screen panel away from the door. Lift the rollers into the screen track and pull the panel toward your body to engage the rollers in the track. See illustration 1. Make sure the rollers are seated in the screen track by moving the panel back and forth.

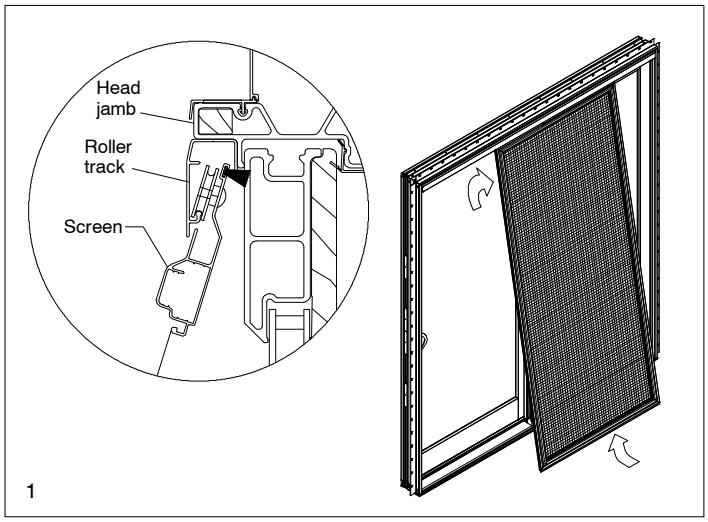

2. Once you are sure the rollers are fully seated in the screen track, pivot the screen panel into position toward the sill and place the bottom screen panel guide into the sill track by lifting it with your fingers or by lifting with a stiff putty knife. See illustration 2.

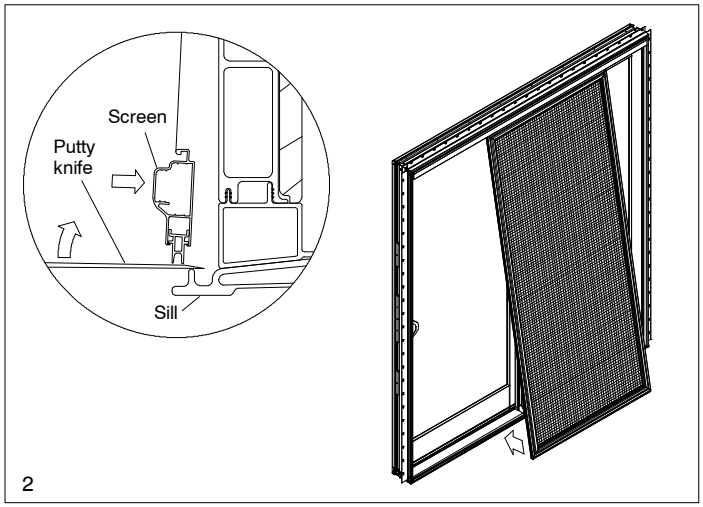

19970070
2008-10-28

Screen Adjustment

3. Adjustment is possible from the interior by loosening or tightening the top roller screw nearest the locking jamb. Adjust the screen so that it is parallel to the locking jamb or casing to achieve an even reveal along the entire height of the jamb. See illustration 3.

NOTE: If more adjustment is necessary, the other roller adjustment screw can be used but the screen panel may need to be removed for access.

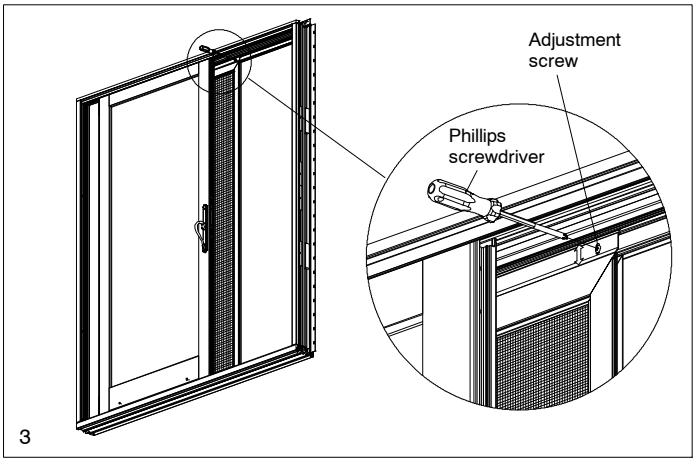

Screen Lock Installation

4. To install the screen lock on side (or center) jamb, raise (unlock) the screen latch. Open the screen and lightly mark the bottom location of the latch with a pencil on the exterior face of the screen. Close the screen against the jamb. Transfer latch location from the screen frame to the jamb. See illustration 4.

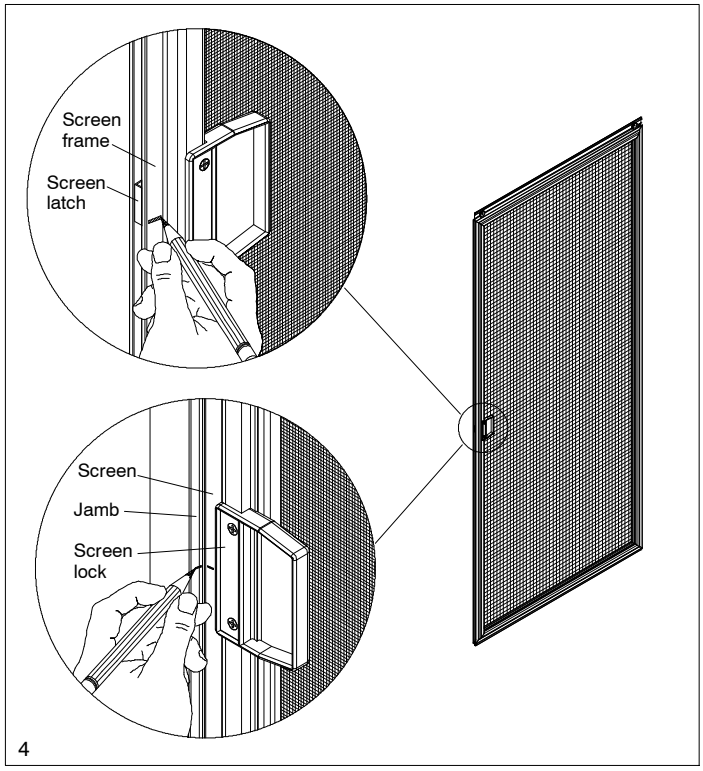

5. Open and slide the screen to the open position. Position strike on the jamb 1/8″ below the latch reference mark. Center the strike on the jamb between the interior and exterior of the screen. See illustrations 5. Mark the center of each screw slot on the jamb. Drill pilot holes with a 3/32″ drill bit. Position strike on jamb and fasten with the two provided #6 x 1/2″ pan head screws. Ser strike screws at the center of the adjustment slots. Close screen and check latch operation. Raise or lower strike as needed.

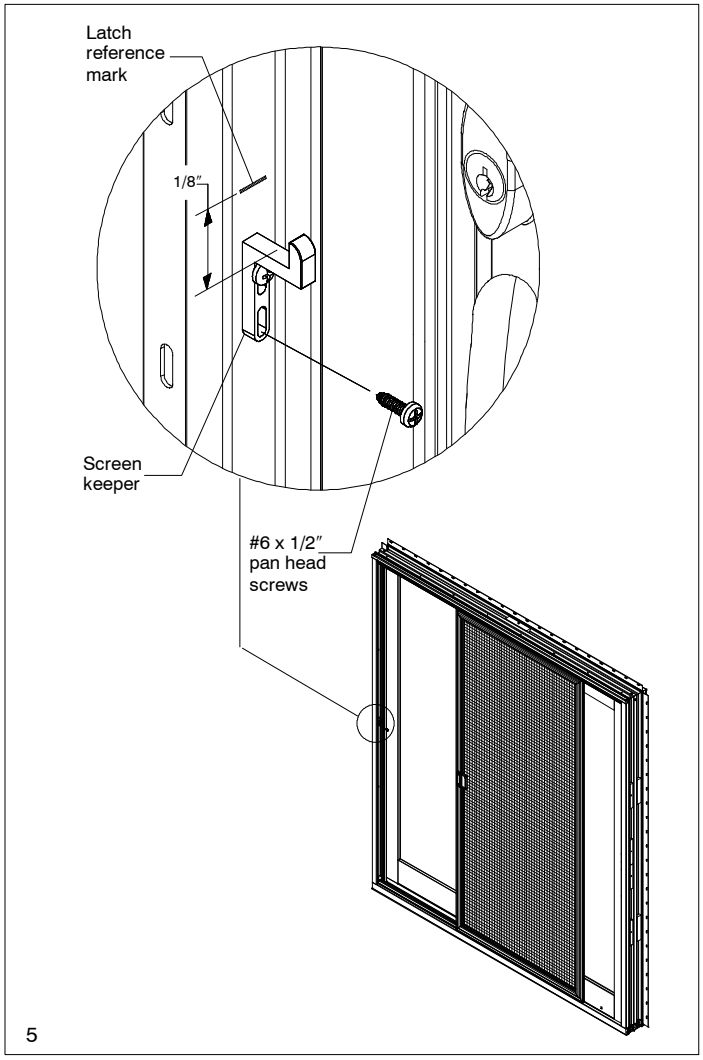

5

Removing the Screen Panel

6. To remove the screen panel, start at the bottom corner and pry the screen panel guide up with a putty knife. Pull the guide off the screen sill track and work your way to the other end. See illustration 6.

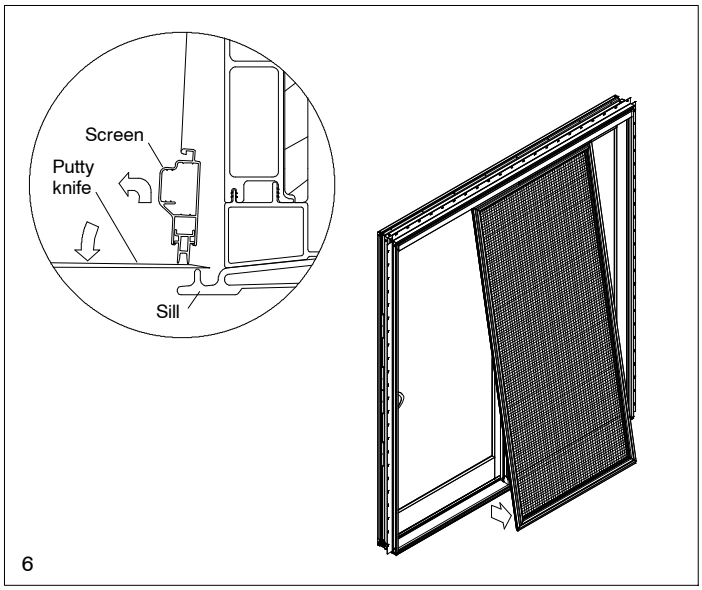

6

7. Once the sill end of the screen panel is completely released from the sill track, pivot the bottom of the screen out and push the panel toward the head jamb. This will release the screen panel rollers from the head jamb screen track. Remove the panel from the door. See illustration 7.

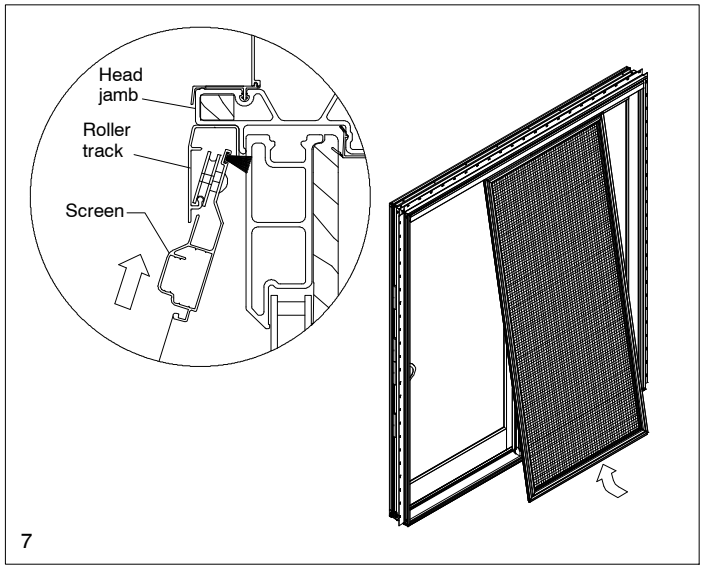

7