Marvin Door Ultimate Sliding Screen Installation Instruction

MARVIN Windows and Doors Built around you.

YOU WILL NEED TO SUPPLY

Tape measure Power driver/drill with #1 Phillips bit 3/32″ drill bit
Flat bladed standard screwdriver

Installing the Screen Track

1. Center the screen track at the unit head jamb. Align fhe front of the screen track with the front edge of the cladding or BMC. Pre-drill pilot holes through the screw holes in the screen track with the 3/32″ drill bit. Secure the screen track to the head jamb with the supplied screws. See illustration 1.

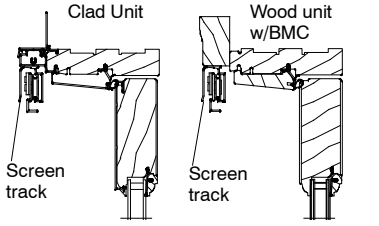

1

Installing the Screen Panel

1. From the exterior, lift the screen panel onto the sill screen guide. See illustration 2.
2. Tip the screen panel up to the roller bar assembly and align screen holes with holes in roller bar. Attach the panel to the roller bar assembly with the 1/2″ screws provided. See illustration 2.

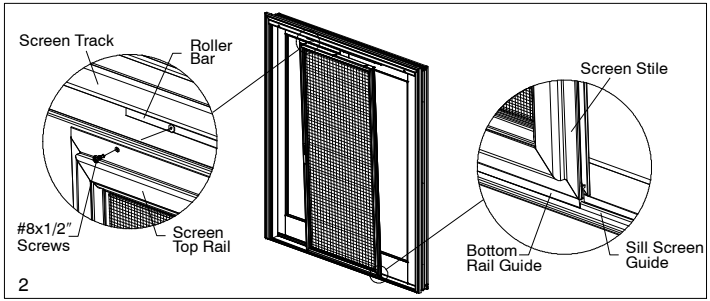

2

Screen Adjustment

1. Close the screen panel within 1/4″ of the jamb. Adjust the screen up or down so that an even reveal is attained along the entire height of the screen panel. Adjustment is possible by loosening or tightening the adjustment screw found in the roller bar assembly. Remove plugs from the screen track to reveal access hole. Slide screen panel so that adjustment screw lines up with access hole and adjust as necessary. See illustration 3.

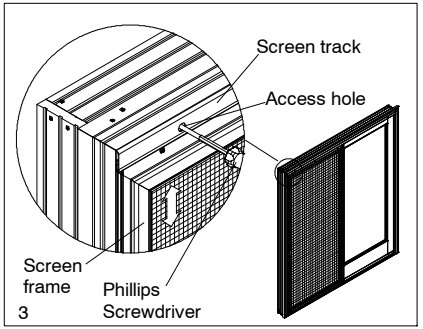

3

Install Strike Plate

1. To mount strike plate on casing, cut out template below. Place bottom edge of template 34 3/16, (868) from the exterior top edge of the sill. With template at this measurement, mark screw location. Attach strike with #4 x 3/4, screws. See illustration 4. Template on back.

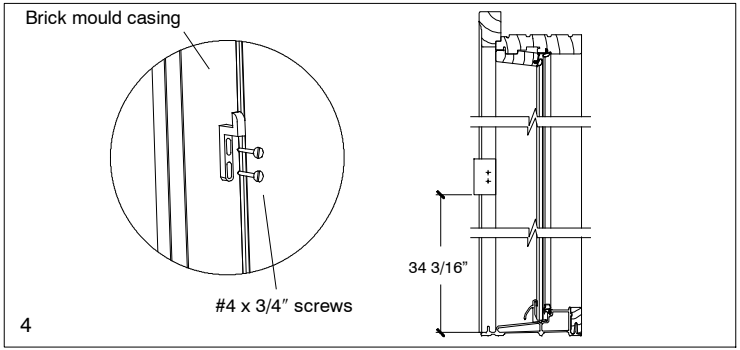

4

Note: This instruction can be used for both sliding and swinging doors

11708610
2011-02-28

Screen Lock Installation

1. To install the screen lock on side, center, or astragal jamb, raise (unlock) the screen latch. Open the screen and lightly mark the location of bottom of latch with a pencil on the exterior face of the screen. Close the screen against the jamb or astragal. Transfer latch location from the screen frame to the jamb. See illustration 5.

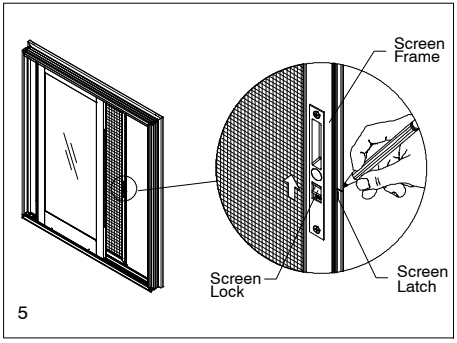

2. Open and slide the screen out of the way. Position strike on the jamb 1/8″ below the latch reference mark. Center the strike on the jamb so that it will fall between the interior and exterior of the screen. See illustration 6. Mark the center of each screw slot on jamb. Drill pilot holes with a 3/32″ drill bit. Place the strike on jamb and fasten with the 2–#4 x 5/8″ pan head screws at the center of the adjustment slots. Close screen and check latch operation. Raise or lower the strike as needed.

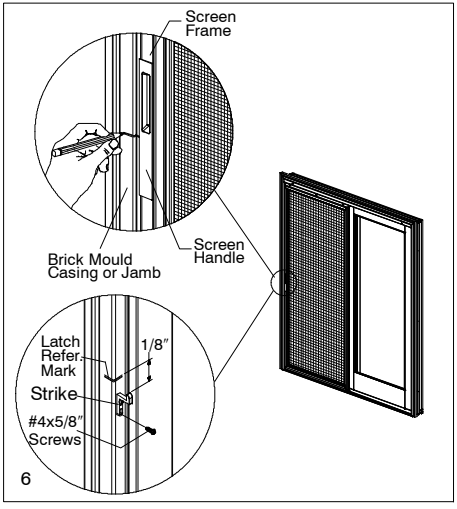

Remove Sliding Screen

1. To remove screen, simply remove screws attaching screen to roller bar and lift off guide. See illustration 7.

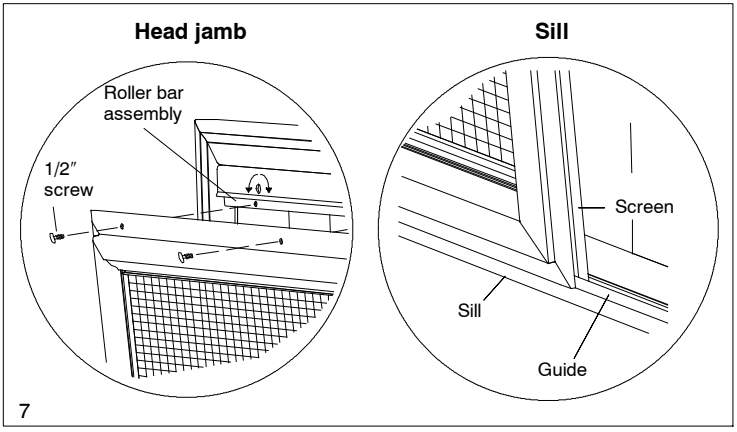

MEASURE UP FROM BOTTOM OF SILL 34 3/16” (868) TO BOTTOM EDGE

THIS EDGE AGAINST SIDE JAMB

CUT OUT TEMPLATE