Simulated Divided Lites (SDL) Field Service Guide

Field Applied Installation Instructions

Field application of simulated divided lites is not recommended. Whenever possible, the entire sash or panel should be replaced with factory installed SDLs. Only Marvin approved replacement SDL field applications by authorized personnel will be warranted. Units that were not factory applied initially will not be warranted as to the SDLs adhering to the glass surface. The replacement of SDLs in the field should only be attempted by trained and knowledgeable personnel. Carefully read all the directions before you start the project. For questions regarding field application of SDLs, contact your Marvin customer service representative.

ATTENTION: Ambient air and glass surface temperature at installation and 24 hours after must be a minimum of 60 degrees Fahrenheit for proper SDL tape adhesion. DO NOT attempt to install field applied SDL bars in environments with temperatures less than 60 degrees F.

STANDARD PARTS SHIPPED

Replacement SDL bars (adhesive tape will be factory applied when practical)
Adhesive tape (will be provided if not factory applied to bars)
One bottle of 5cc Silane with mixing instructions

YOU WILL NEED TO SUPPLY

Safety glasses	Paper towels or soft cloth
Gloves	Safety scraper with razor blade
Plastic head mallet	Nylon wedge
Two empty spray containers	Isopropyl alcohol
Mineral spirits	Laminate roller
Pencil	

NOTE: The following illustrations are provided for identification of various interior and exterior applications of SDL bars. Please match your existing SDLs to these illustrations and ensure they are applied to the proper surface of each product.

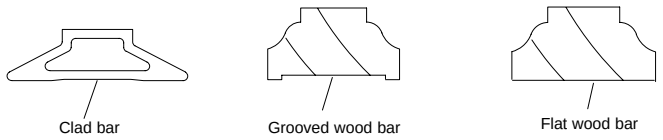

Examine your unit to ensure it has the appropriate glazing bead for SDL applications. If necessary, change the standard glazing bead to an SDL glazing bead. Direct glaze and most single glaze units will not require SDL glazing bead to be used.

NOTE: Whenever practical, mark the location of the old SDL bars to be used as a reference point when installing new bars.

1. If you are not replacing the glass, skip to Step 2. If your unit requires the glass to be replaced, do so before applying the SDLs. Follow the necessary reglazing recommendations for your particular unit. It is generally not necessary to remove the entire SDLs from the broken glass except for a small portion along the edge of the interior and exterior daylight openings. After reglazing, clean glass of any silicone squeeze out using the safety scraper with razor blade. Be careful not to score or scratch the glass surface. See illustration 1.

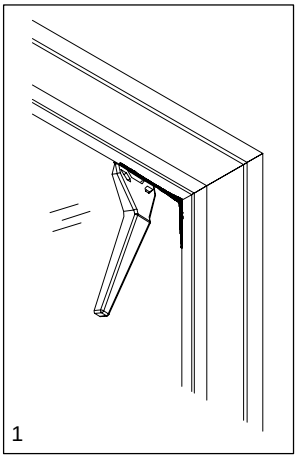
1

2. If your unit's glass is serviceable and only the SDLs need replacing, it will be necessary to remove the interior and or exterior SDL bars from the glass using the method listed in the next step.

3. Spray the area on either side of the SDL bar with mineral spirits as shown in illustration 2. This will aid in the removal of the bars from the glass surface.

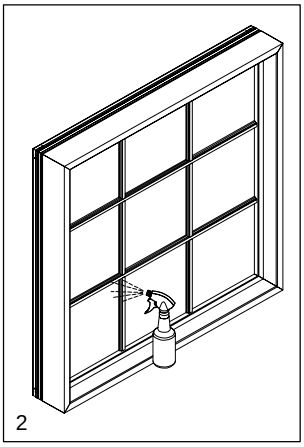
2

4. Place the nylon wedge between the glass and SDL tape. Use the plastic headed mallet to tap the wedge along the length of the bar on both sides. Use patience and caution when removing the bars from the glass. Repeat this procedure until all components are removed from the glass. See illustration 3.

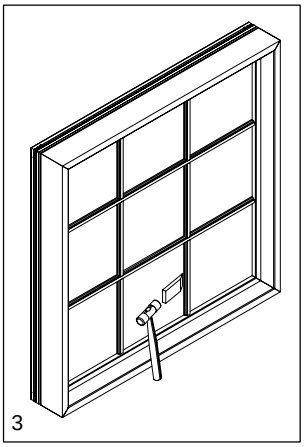
3

5. After removing SDL bars, inspect glass to ensure it is still serviceable. Scrape excess tape residue from glass surface. Using paper towels or a soft cloth, clean the surface of the glass with isopropyl alcohol.

19970074
1/23/2001

NOTE: When applying varying dimensioned flat surfaced wood SDL bars on both the exterior and interior surface examine the SDL bar for an interior/exterior indication. Ensure they are placed on the proper surface. As a general rule, the thicker dimensioned bar is applied to the interior surface.

6. Assemble your bars (if necessary) and dry fit to the interior and exterior glass surface. When assembling bars you may encounter a bar that appears to be off, if so simply reverse that bar and dry fit the assembly again.

7. While every effort is used to provide the correct length SDL bars, variations do occur. In the event the reverse coped ends are too long, simply use a rotary tool such as a Dremel to modify the cope to fit. If SDL bars have square ends, you will be responsible for trimming them to fit your unit. It is important when trimming these bars that they are cut short enough so that the bars are not forced into unit.

8. Temporarily apply the interior SDL to the glass surface and measure and adjust the bars until the desired locations are obtained. Simply mark the locations of the SDLs if not done earlier. See illustration 4.

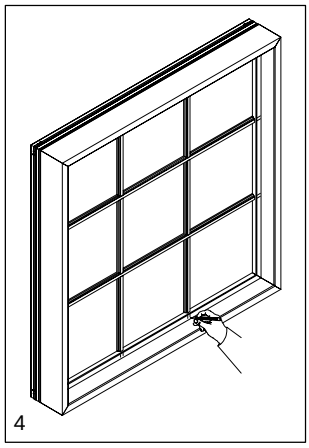

9. Apply adhesive tape to the back side of both the interior and exterior SDL bars in accordance with examples shown in illustrations 5, 6 and 7. Do not remove backing from the adhesive tape at this time, except for certain radius applications. When applying tape to the SDL bar surface make sure the tape is flush with both edges of the bar.

10. Vertical bars should have the tape applied full length, while horizontal bars will have tape applied horizontally in sections between the vertical bars. See illustration 5 sequence. Apply tape to full length radius bars. As you affix tape to a radius bar, it may be necessary to remove the backing from the tape during the application process in order to correctly follow the contour of the bar. See illustration 6 sequence. Dogleg SDL bars will have the dogleg sequence applied first followed by the radius and finally the vertical portion. See illustration 7 sequence.

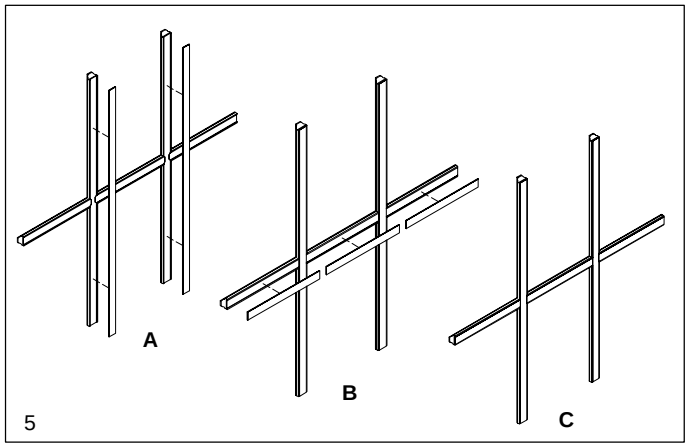

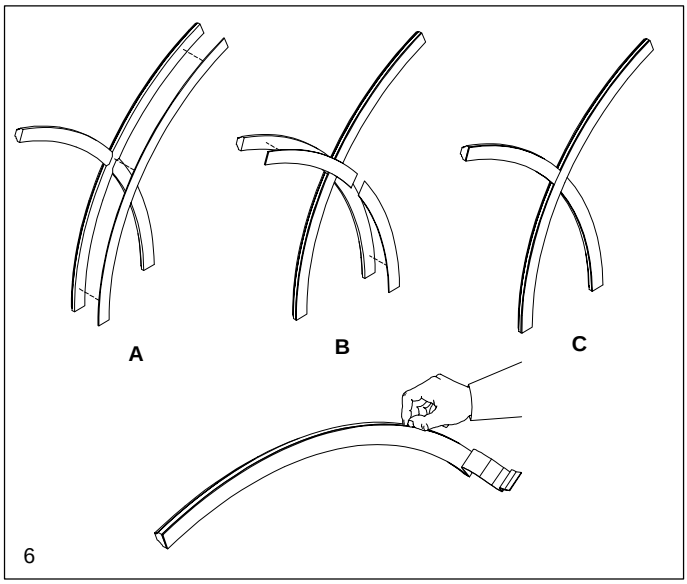

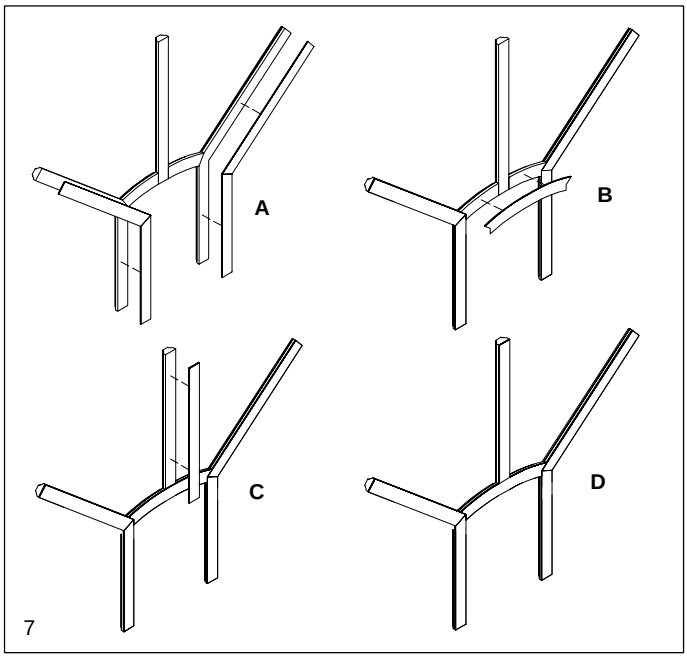

11. Make sure intersections of tape are cut as shown in illustration 8. Avoid open ends on cuts. See correct and incorrect examples. Note: If the tape backing was previously removed from a radius bar application, ensure the taped surface remains upward until you are ready to apply to the glass surface. Do not lay face down. This will eliminate foreign objects adhering to the tape.

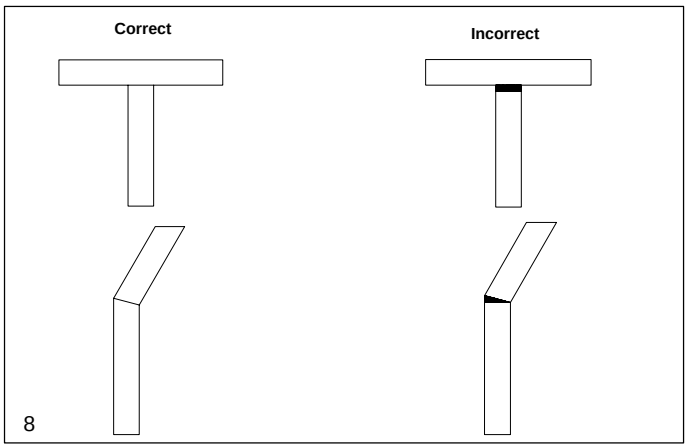

12. Follow the enclosed instructions to mix the glass primer. Before applying glass primer, clean glass surfaces again, if necessary, using isopropyl alcohol. Read the instructions and Material Safety Data Sheet thoroughly before mixing and using.

13. Prepare the glass with the provided glass primer. Never apply glass primer if the unit is in direct sunlight. Primer must be applied in a shaded area. Apply primer by either spraying a fine mist to the glass surface or by moistening a cloth with the primer. See illustration 9. After the primer is applied, wipe if off completely. This only needs to be applied to the area where the SDL bars are actually applied. Never spray more than a two foot area before wiping.

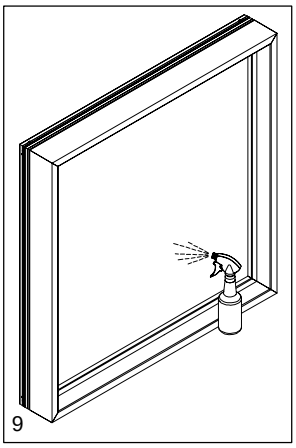
9

14. Remove the paper backing from the tape. Very carefully, place the interior SDL on the glass surface, being sure that all bars are exactly where they need to be positioned as indicated by pencil marks. See illustration 10. Note: If the insulating glass has spacer bars, ensure the SDL assembly is centered over the spacer bars. See illustration 11.

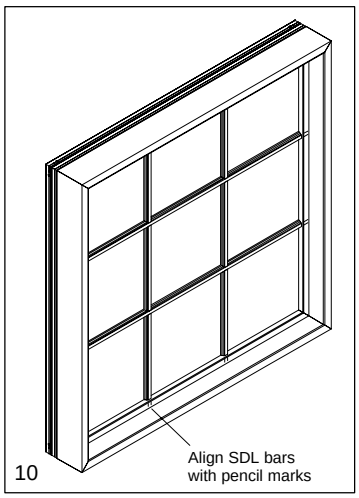

10

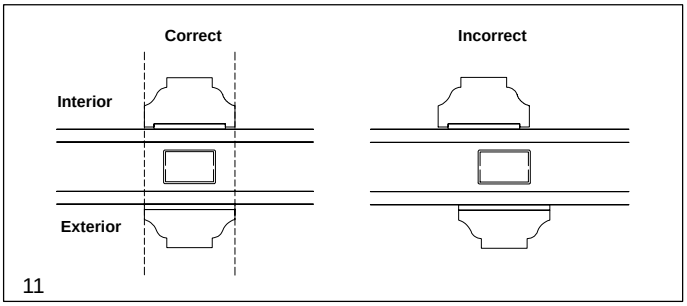

11

15. Firmly press down. Once tape has been placed on the glass, it will be extremely difficult to reposition it. Use a laminate roller or the heel of your hand to press down on the SDL bar. Look from the exterior to make sure that there is at least a 70 percent adhesion to the glass surface. See illustration 12.

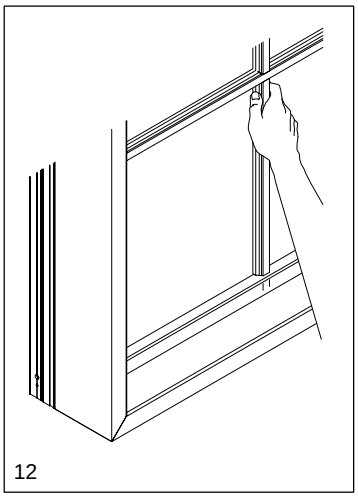
12

16. Repeat the procedure for the exterior bar surface. Align the exterior bars to the interior bars.