Retractable Screen Pull Bar Replacement
Field Applied Instruction

ABSTRACT: The following instruction is for replacing the pull bar on an existing retractable screen, adjusting the reveal on the retractable screen, and locking insert removal and replacement.

NOTE: Numbers listed in parentheses ( ) are metric equivalents in millimeters rounded to the nearest whole number.

WARNING

Always practice safety! Wear the appropriate eye, ear and hand protection, especially when working with power tools.

NOTE: If the video does not play you may need an updated version of Adobe Reader.

Retrofitting Retractable Screen Pull Bar

You Will Need to Supply	
Safety glasses	Flat screwdriver
Small pry bar	
7/64" (3) Ball hex allen wrench	
Parts Included in Kit	
Pull bar	2-Glider blocks
Screws	

1. Retract the screen.
2. Unlock and open the sash. See figure 1.
3. Using a small flat screwdriver, remove the operating handle and handle cover. Grasp the lock handle and pull firmly outward to remove. Detach the top of the lock escutcheon first then the bottom should be carefully removed. See figure 1.

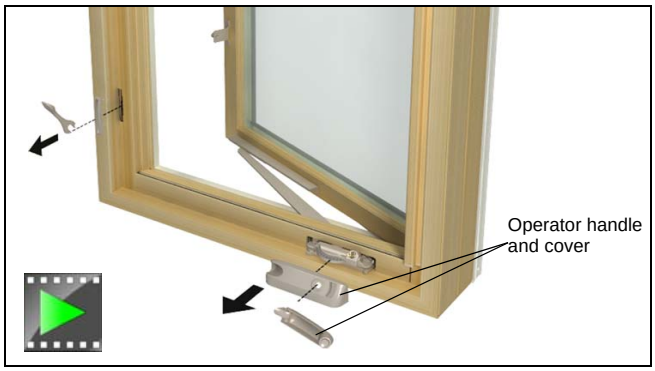

Figure 1

4. Remove head jamb stop cover and sill cover. You can use a small pry bar and small wood block to ease removal if necessary. Slowly slide covers off by working pry bar down the cover for removal.
5. Remove the pull bar from the track (gently pull the pull bar out of the track by rotating pull bar towards you).

Tip

Use a 3/8" (10) backer rod or small clamps to secure screen 4"-6" (102-152) outside of track.

6. Remove the glider block from one end of the pull bar by removing screw. See figure 2.

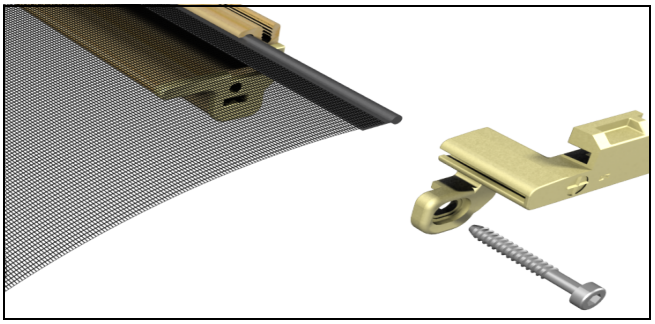

Figure 2

7. Slide mesh out of pull bar, discard old pull bar and glider block.

Tip

For ease of installation, file or sand the screen slot on the edge of the pull bar. This will ensure a smooth installation of the screen mesh.

8. Slide the new pull bar onto the screen mesh. See figure 3.

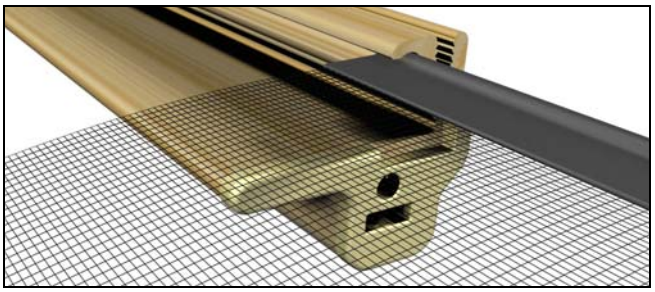

Figure 3

9. Apply new glider block to end of pull bar assembly. Ensure the screen spline is engaged in gliding block. Using provided screw, attach glider block to end of pull bar.

10. Insert the pull bar into the track.

11. Reinstall head jamb stop cover and sill cover.

Glider Block Adjustment

1. Use a credit card or a thin feeler gauge inserted between pull bar and side stop to ensure that you won't over tighten glider block. See figure 4.

Figure 4

Tip

You will want to allow for some clearance for movement, a credit card or thin feeler gauge will ensure that you don't over tighten the glider block.

2. Push pull bar gently towards lock jamb. Turn glider block 1/4 turn on top and bottom until desired revel is reached using 7/64" (3) allen wrench. Turn clockwise to tighten, counterclockwise to loosen. See figure 5.

Figure 5

Locking Insert Replacement

1. Retract the screen.

2. Unlock and open the sash. See figure 6.

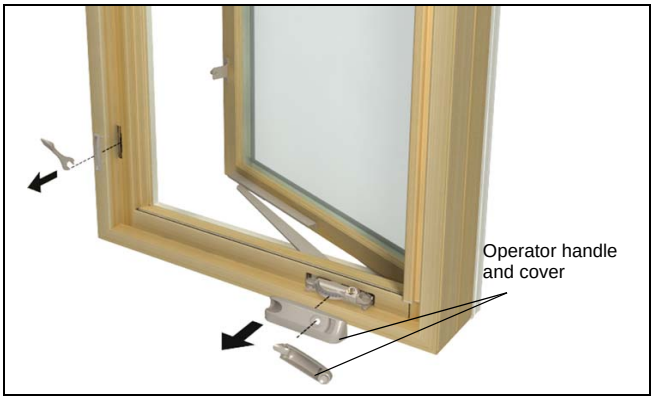

Figure 6

3. Using a small flat screwdriver, remove the operating handle and handle cover. Grasp the lock handle and pull firmly outward to remove. Detach the top of the lock escutcheon first then the bottom should be carefully removed. See figure 6.

4. Remove head jamb stop cover and sill cover. You can use a small pry bar and small wood block to ease removal if necessary. Slowly slide covers off by working pry bar down the cover for removal.

*NOTE: For **Ultimate Casement** windows: Locking inserts are installed inside the side jamb stop. For **Awning** windows: Locking insert is located on bottom track.*

5. Snap insert out of side jamb stop/bottom track.

6. Discard old locking insert if replacing.

7. Snap insert into notch. See figure 7.

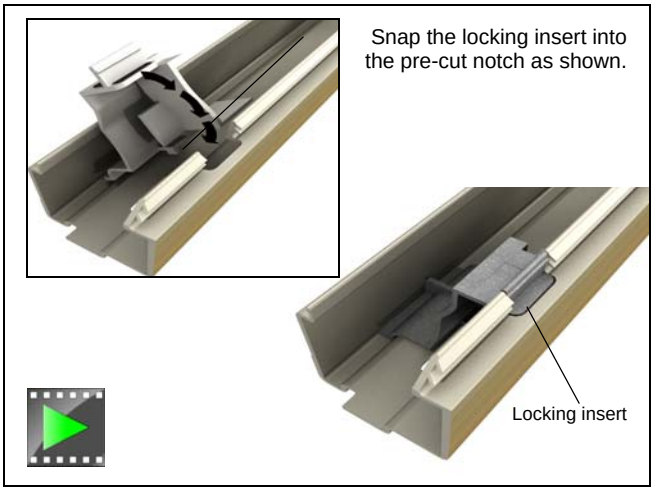

Figure 7