CLAD ULTIMATE DOUBLE HUNG – NEXT GENERATION

Table of Contents

	PAGE
History	2
Ultimate Double Hung and Single Hung – Next Generation	
Part Identification – Clad Ultimate Double Hung – NG	3
Part Identification – Clad Ultimate Double Hung – NG IZ3	4
Part Identification – Clad Ultimate Double Hung Picture – NG	5
Part Identification – Clad Ultimate Double Hung Transom – NG	6
Part Identification – Clad Ultimate Single Hung – NG	7
Ultimate Double Hung and Single Hung Round Top – Next Generation	
Part Identification – Clad Ultimate Double Hung Round Top – NG	8
Part Identification – Clad Ultimate Double Hung Round Top Picture– NG	9
Part Identification – Clad Ultimate Double Hung Round Top Transom – NG	10
Part Identification – Clad Ultimate Singe Hung Round Top – NG	11
Ultimate Double Hung, Single Hung and Round Top – Next Generation	
Hardware Parts – Clad Ultimate Double/Single Hung – NG	12
Hardware Parts – Clad Ultimate Double/Single Hung Round Top – NG	17
Balances – Clad Ultimate Double Hung/Single Hung – NG – Block and Tackle	18
Balances – Clad Ultimate Double Hung/Single Hung – NG – Spiral	19
Wood Parts	27
Vinyl Parts	28
Aluminum Parts	29
Hardware Parts – Retractable Screen	30
Retractable Screen Cartridge	31
Screen Parts – Retractable Screen	32
Obsolete Parts – Pre 9/29/2014 and Pre 10/20/2014	33
Obsolete Balance Tubes– Block and Tackle – Pre 1/26/2015	34
Obsolete Vinyl Parts – Pre 9/29/2014	35

ATTENTION:

- Specification and technical data are subject to change without notice.
- Numbers listed in parentheses ( ) are metric equivalents in millimeters rounded to the nearest whole number.

HISTORY

PRODUCED	UNIT TYPE	FEATURES OR CHANGES	STATUS
April 2014	Clad Ultimate Double Hung – NG	4/28/14 Introduced the Clad Ultimate Double Hung – Next Generation product family. It's a vertical sliding hung window platform that has an overall jamb depth of 4 9/16″. Available in a variety of sizes and products including: CUDH–NG, CUDHP–NG, CUDHT–NG, and CUSH–NG. Operators include a multi–point locking hardware system that locks into the jambs with a tilt–mode feature. 4/28/14 Introduced Retractable Screen for the CUDH–NG. The screen deploys from the top in a pull down operation. It may be used separately or in conjunction with an interior shade system.	Present
October 2014	Clad Ultimate Double Hung – NG	10/27/14 Redesigned balances for even better operating performance. Also introducing Certified mull for CUDH–NG, CUDHP–NG, CUDHT–NG, and CUSH–NG. Implemented the new performance brackets. Also there was 0.121″ added to the checkrail interlock.	Present
February 2015	Clad Ultimate Double Hung – NG Clad Ultimate Double Hung Round Top – NG	02/23/2015 Introduce factory installed Window Opening Control Device (WOCD) Field Service Only. Available in all 9 hardware colors. CUDH– NG is now available in IZ3 Also introducing the Clad Ultimate Double Hung Round Top – Next Generation (CUDHRT–NG). Including Picture units (CUDHRTP–NG) and Transoms (CUDHRTT–NG.	Present
August 2015	Clad Ultimate Double Hung – NG Clad Ultimate Double Hung Round Top – NG	08/31/2015 Introduced Sash Limiters and exterior sash lug, ogee profile.	Present
December 2015	Clad Ultimate Double Hung – NG Clad Ultimate Double Hung Round Top – NG	12/21/2015 Introduced new colors to our standard color palette; Clay (CL), Gunmetal (GM), Liberty Bronze (MLB), and Suede (SE). Obsoleted Arctic White, Cumulus Gray, Desert Beige, and French Vanilla from the color palette.	Present
April 2016	Clad Ultimate Double Hung – NG Clad Ultimate Double Hung Round Top – NG	04/25/2016 Redesigned jamb weather strip and vinyl jamb liners for improved performance. Discontinued use of EZE balances tube. Replaced with Block and Tackle or UL Hybrid Spiral balance tube, based upon sash weight.	Present

PART IDENTIFICATION

CUDH – NG
OPERATOR

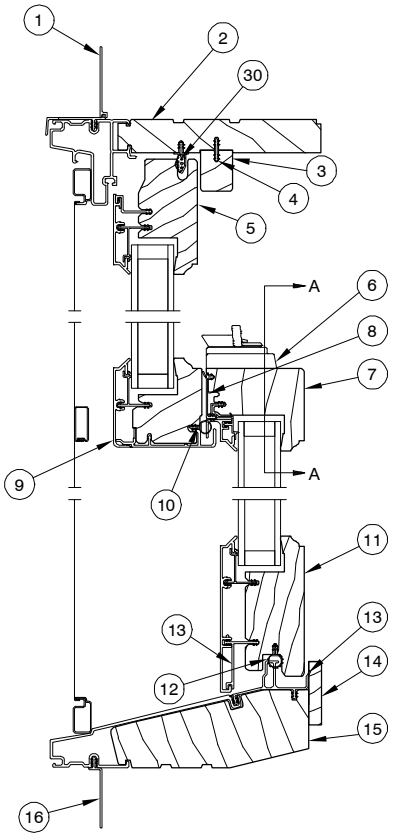

Head Jamb and Sill Vertical Detail

1. Head Jamb Nailing Fin/Drip Cap, V119
2. Head Jamb
3. Parting Stop, W11578
4. Connecting Barb, V803
5. Top Rail
6. Sash Lock
7. Bottom Check Rail
8. Bottom Check Rail Hardware Cover, V2478
9. Top Check Rail
10. Top Check Rail Weather Strip, V113
11. Bottom Rail
12. Bottom Rail Weather Strip, V147
13. Sill Thermal Break, V2191
14. Sill Liner, W11576
15. Sill
16. Sill Nailing Fin, V084
17. Bottom Sash Latch Assembly
18. Cord Guide Assembly
19. Operation Cord
20. Jamb Nailing Fin, V104
21. Jamb
22. Vinyl Jamb Liner, V2655
23. Jamb Liner, W12679
24. Stile Bottom Sash
25. Clad Mid Exterior Cover, A2460
26. Mid Cover Base, V2432
27. Frame Weather Strip, V2682
28. Interior Jamb Cover, W11581
29. Exterior Hardware Cover, V2338
30. Head Jamb Weather Strip, V2392
31. Bottom Sash Balance Tube
32. Top Sash Balance Tube
33. Exterior Clad Cover, A2615
34. Exterior Sash Stop, V2257
35. Stile Top Sash

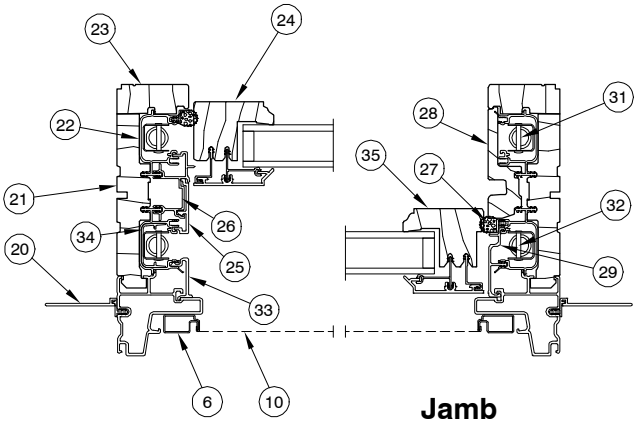

Jamb Horizontal Detail

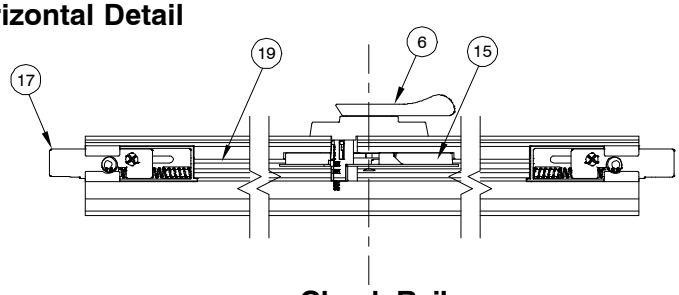

Check Rail

PART IDENTIFICATION

CUDH – NG
IZ3 OPERATOR

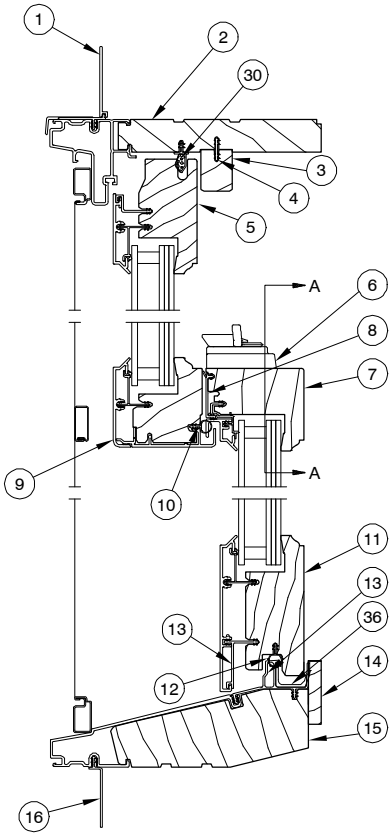

1. Head Jamb Nailing Fin/Drip Cap, V119
2. Head Jamb
3. Parting Stop, W11578
4. Connecting Barb, V803
5. Top Rail
6. Sash Lock
7. Bottom Check Rail
8. Bottom Check Rail Hardware Cover, V2478
9. Top Check Rail
10. Top Check Rail Weather Strip, V113
11. Bottom Rail
12. Bottom Rail Weather Strip, V147
13. Sill Thermal Break, V2191
14. Sill Liner, W11576
15. Sill
16. Sill Nailing Fin, V084
17. Bottom Sash Latch Assembly
18. Cord Guide Assembly
19. Operation Cord
20. Jamb Nailing Fin, V104
21. Jamb
22. Vinyl Jamb Liner, V2655
23. Jamb Liner, W12679
24. Stile Bottom Sash
25. Clad Mid Exterior Cover, A2460
26. Mid Cover Base, V2432
27. Frame Weather Strip, V2682
28. Interior Jamb Cover, W11581
29. Exterior Hardware Cover, V2338
30. Head Jamb Weather Strip, V2392
31. Bottom Sash Balance Tube
32. Top Sash Balance Tube
33. Exterior Clad Cover, A2615
34. Exterior Sash Stop, V2257
35. Stile Top Sash
36. IZ3 Sill Reinforcement, A2766

Head Jamb and Sill Vertical Detail

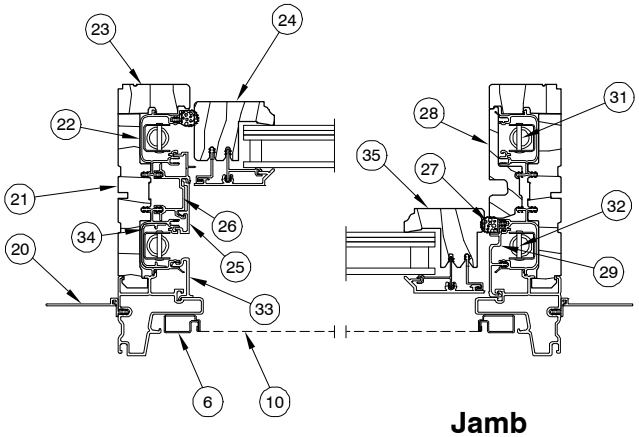

Jamb Horizontal Detail

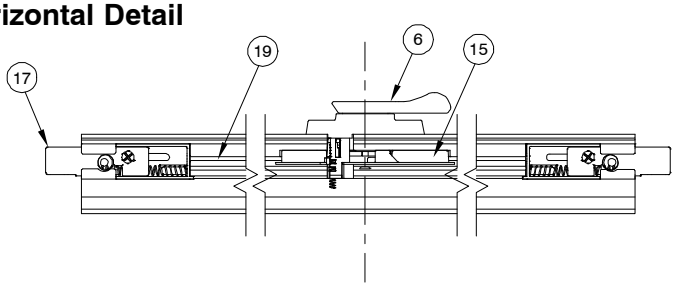

Check Rail

PART IDENTIFICATION

CUDH – NG
PICTURE

1. Head Jamb Nailing Fin/Drip Cap, V119
2. Head Jamb
3. Interior Sash Stop, W12407
   IZ3 Interior Sash Stop, W11836
4. Connecting Barb, V803
5. Exterior Clad Cover
6. Jamb Nailing Fin, V104
7. Header Weather Strip, V147
8. Top Rail
9. Bottom Rail
10. Bottom Rail Weather Strip, V147
11. Sill Liner, W11825
12. Sill
13. Sill Nailing Fin, V084
14. Sill Thermal Break/Liner, V2191
15. Jamb Liner, W12279
16. Jamb
17. Jamb Stop, W12407
18. Stile
19. Jamb Filler Foam
20. IZ3 Sill Bracket

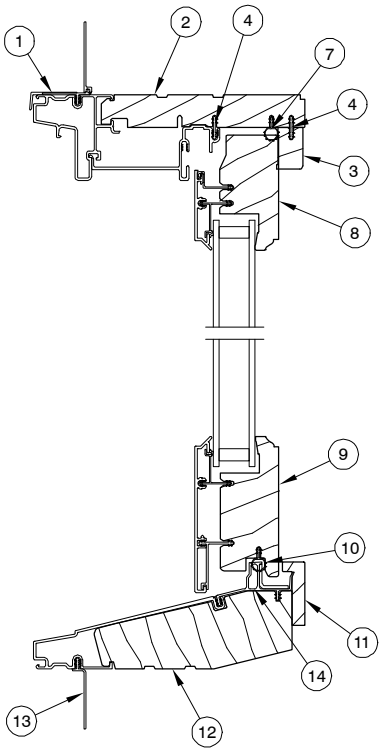

Head Jamb and Sill Vertical Details

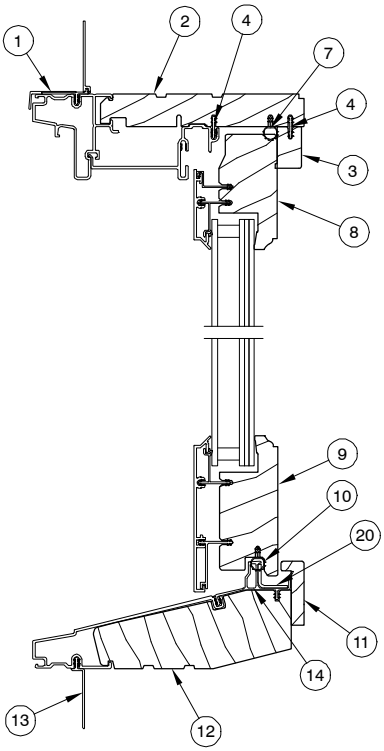

IZ3 Head Jamb and Sill Vertical Details

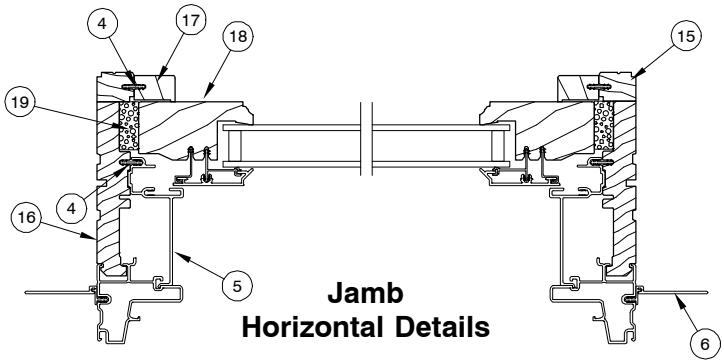

Jamb Horizontal Details

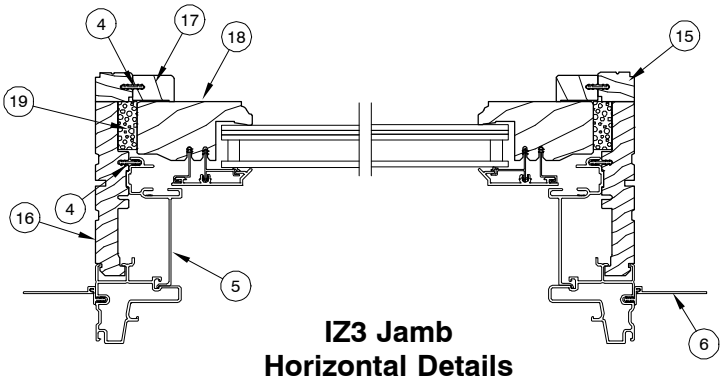

IZ3 Jamb Horizontal Details

PART IDENTIFICATION

CUDH – NG
TRANSOM

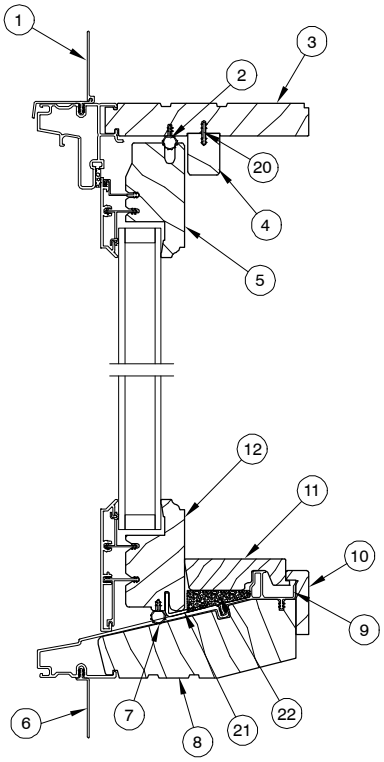

1. Head Jamb Nailing Fin/Drip Cap, V119
2. Head Jamb Weather Strip, V147
3. Head Jamb
4. Head Jamb Parting Stop, W11578
5. Top Rail
6. Sill Nailing Fin, V084
7. Bottom Rail Weather Strip. V147
8. Sill
9. Sill Thermal Break. V2191
10. Sill Liner, W11825
11. Sill Filler, W12061
12. Bottom Rail
13. Jamb Nailing Fin, V104
14. Jamb
15. Interior Jamb Liner, W12679
16. Vinyl Jamb Liner, V2655
17. Stile
18. Interior Cover Transom, W11906
19. Jamb Weather Strip, V2682
20. Connecting Barb, V803
21. Transom Bracket
22. Transom Sill Filler Foam

Head Jamb and Sill
Vertical Details

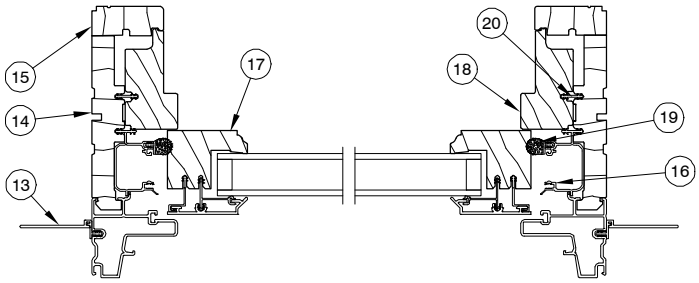

Jamb
Horizontal Details

PART IDENTIFICATION

CUSH – NG OPERATOR

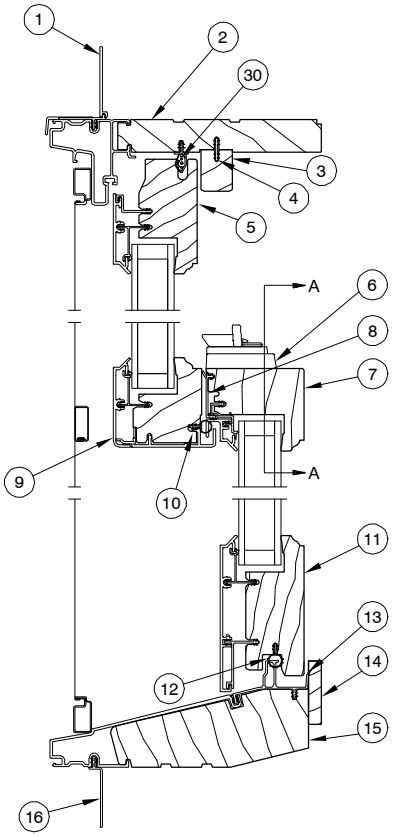

Head Jamb and Sill Vertical Details

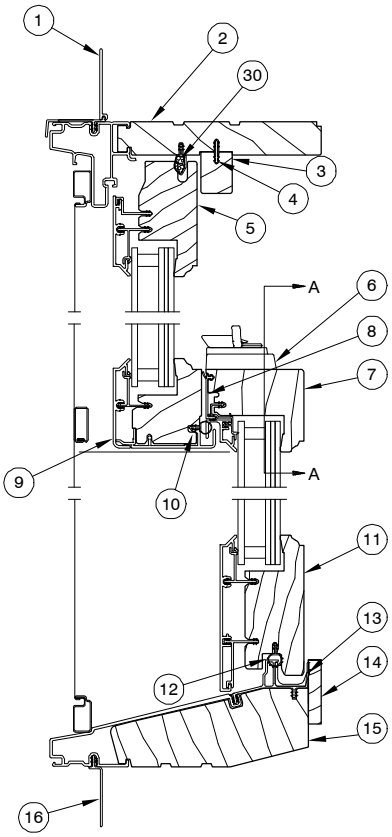

IZ3 Head Jamb and Sill Vertical Detail

1. Head Jamb Nailing Fin/Drip Cap, V119
2. Head Jamb
3. Parting Stop, W11578
4. Connecting Barb, V803
5. Top Rail
6. Sash Lock
7. Bottom Check Rail
8. Bottom Check Rail Hardware Cover, V2478
9. Top Check Rail
10. Top Check Rail Weather Strip, V113
11. Bottom Rail
12. Bottom Rail Weather Strip, V147
13. Sill Thermal Break, V2191
14. Sill Liner, W11576
15. Sill
16. Sill Nailing Fin, V084
17. Bottom Sash Latch Assembly
18. Cord Guide Assembly
19. Operation Cord
20. Jamb Nailing Fin, V104
21. Jamb
22. Vinyl Jamb Liner, V2655
23. Jamb Liner, W12679
24. Stile Bottom Sash
25. Single Hung Exterior Cover, A2700
26. Mid Cover Base, V2432
27. Frame Weather Strip, V2682
28. Interior Jamb Cover, W11581
29. Exterior Hardware Cover, V2338
30. Head Jamb Weather Strip, V2392
31. Bottom Sash Balance Tube
32. Top Sash Balance Tube
33. Stile Top Sash
34. IZ3 Sill Reinforcement, A2766

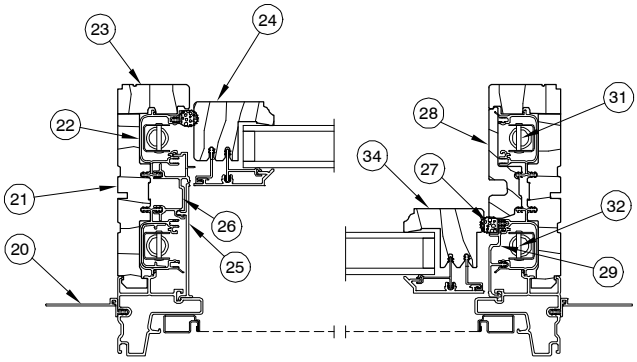

Jamb Horizontal Details

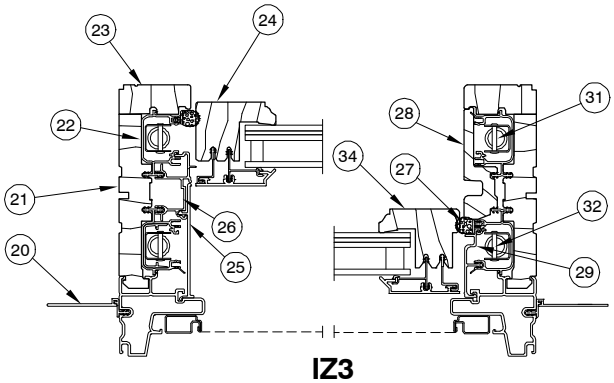

IZ3 Jamb Horizontal Details

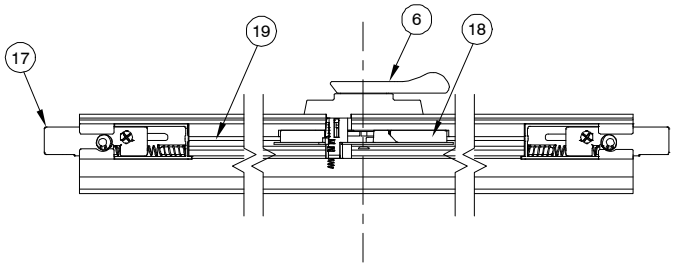

Check Rail

PART IDENTIFICATION

CUDHRT – NG OPERATOR

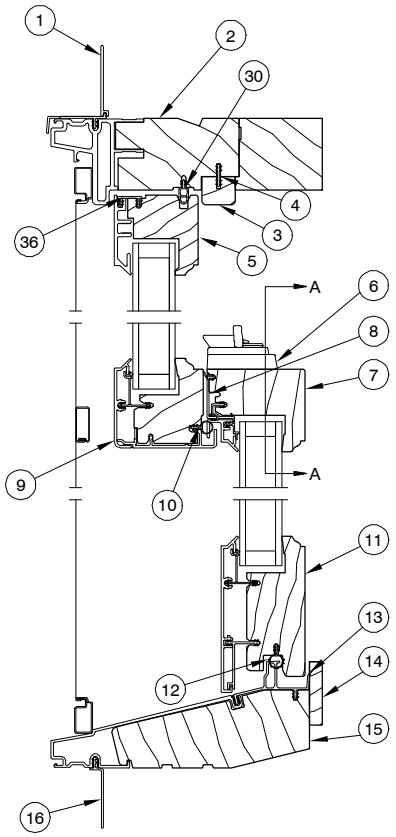

Head Jamb and Sill Vertical Detail

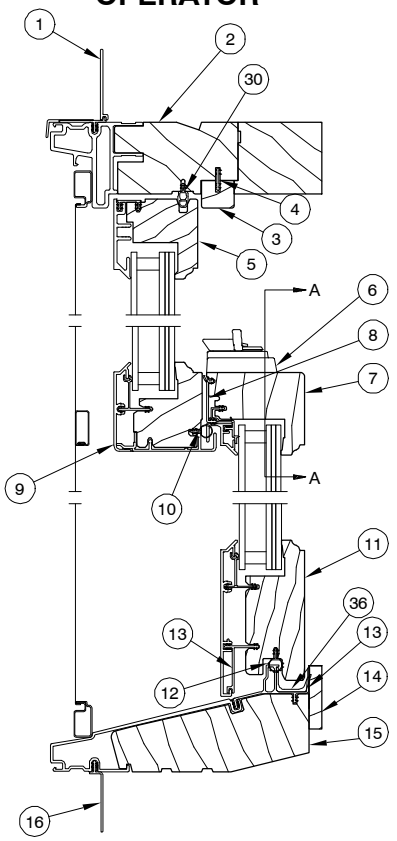

IZ3 Head Jamb and Sill Vertical Detail

1. Head Jamb Nailing Fin/Drip Cap, V119
2. Head Jamb
3. Parting Stop, W12224
4. Connecting Barb, V803
5. Top Rail
6. Sash Lock
7. Bottom Check Rail
8. Bottom Check Rail Hardware Cover, V2478
9. Top Check Rail
10. Top Check Rail Weather Strip, V113
11. Bottom Rail
12. Bottom Rail Weather Strip, V147
13. Sill Thermal Break, V2191
14. Sill Liner, W11576
15. Sill
16. Sill Nailing Fin, V084
17. Bottom Sash Latch Assembly
18. Cord Guide Assembly
19. Operation Cord
20. Jamb Nailing Fin, V104
21. Jamb
22. Vinyl Jamb Liner, V2655
23. Jamb Liner, W12679
24. Stile Bottom Sash
25. Clad Mid Exterior Cover, A2460
26. Mid Cover Base, V2432
27. Frame Weather Strip, V2682
28. Interior Jamb Cover, W11581
29. Exterior Hardware Cover, V2338
30. Head Jamb Weather Strip, V2419
31. Bottom Sash Balance Tube
32. Top Sash Balance Tube
33. Exterior Clad Cover, A2615
34. Exterior Sash Stop, V2257
35. Stile Top Sash
36. Sash Connector, V2401
37. IZ3 Sill Reinforcement, A2766

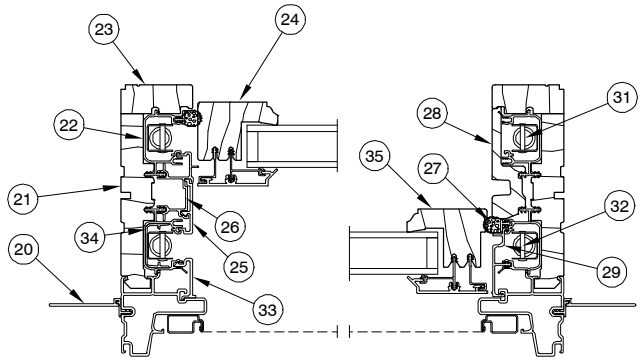

Jamb Horizontal Detail

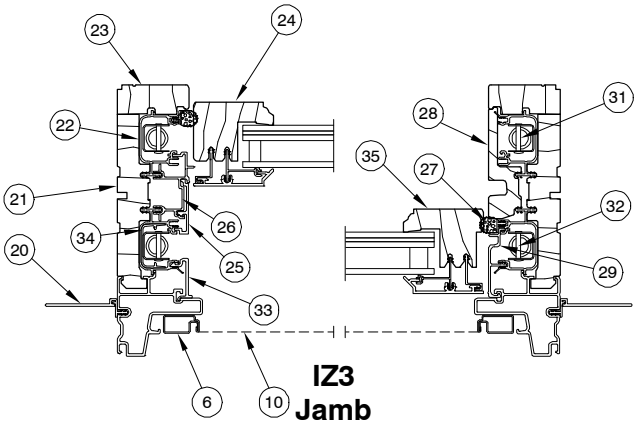

IZ3 Jamb Horizontal Detail

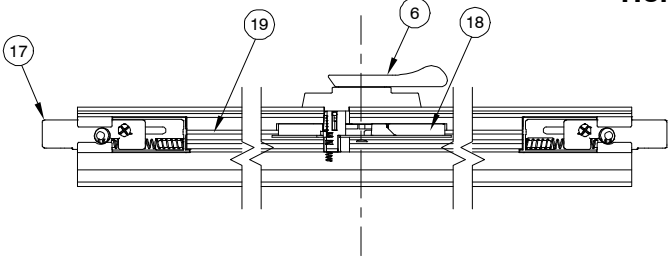

Check Rail

PART IDENTIFICATION

CUDHRT – NG

PICTURE

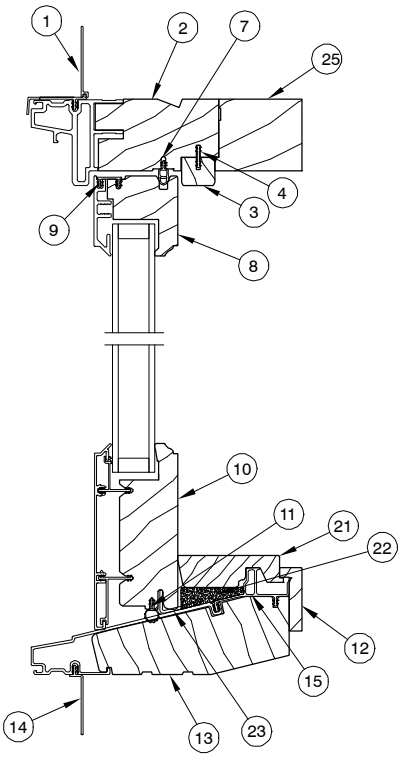

Head Jamb and Sill Vertical Details

1. Head Jamb Nailing Fin/Drip Cap, V119
2. Head Jamb
3. Parting Stop, W12224
4. Connecting Barb, V803
5. Sash Retainer Cover, V2509
6. Jamb Nailing Fin, V104
7. Head Jamb Weather Strip, V2419
8. Top Rail
9. Sash Connector, V2401
10. Bottom Rail
11. Bottom Rail Weather Strip, V147
12. Sill Liner, W11825
13. Sill
14. Sill Nailing Fin, V084
15. Sill Thermal Break/Liner, V2191
16. Jamb Liner, W12679
17. Jamb
18. Vinyl Jamb Liner, V2655
19. Jamb Weather Strip, V2682
20. Stile
21. Sill Filler, W12061
22. Sill Filler Foam
23. Bracket
24. Interior Cover, W11906
25. Head Jamb, Interior Component

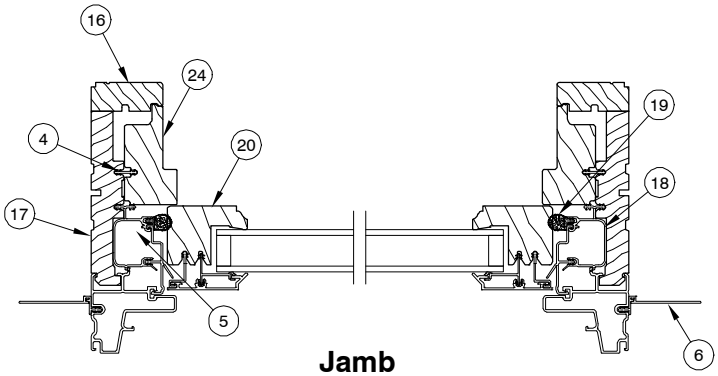

Jamb Horizontal Details

PART IDENTIFICATION

CUDHRT – NG
TRANSOM

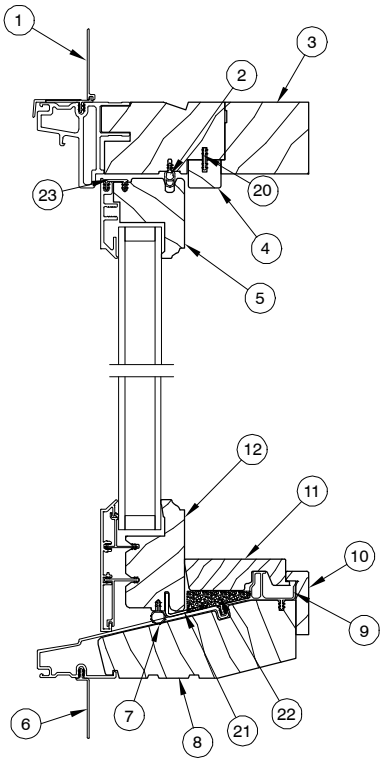

Head Jamb and Sill Vertical Details

1. Head Jamb Nailing Fin/Drip Cap, V119
2. Head Jamb Weather Strip, V2419
3. Head Jamb
4. Parting Stop, W12224
5. Top Rail
6. Sill Nailing Fin, V084
7. Bottom Rail Weather Strip. V147
8. Sill
9. Sill Thermal Break. V2191
10. Sill Liner, W11825
11. Sill Filler, W12061
12. Bottom Rail
13. Jamb Nailing Fin, V104
14. Jamb
15. Interior Jamb Liner, W12278
16. Vinyl Jamb Liner, V2385
17. Stile
18. Interior Cover Transom, W11906
19. Jamb Weather Strip, V2336
20. Connecting Barb, V803
21. Transom Bracket
22. Transom Sill Filler Foam
23. Sash Connector, V2401
24. Sash Retainer Cover, V2509

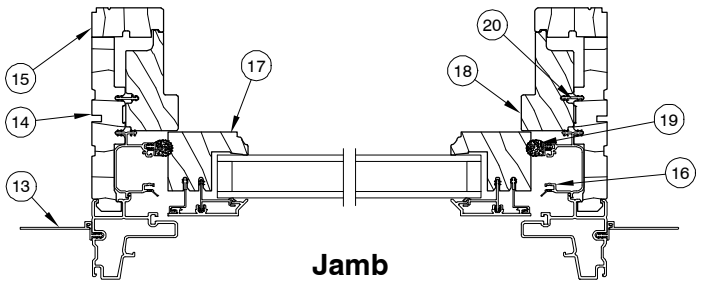

Jamb Horizontal Details

PART IDENTIFICATION

CUSHRT – NG
OPERATOR

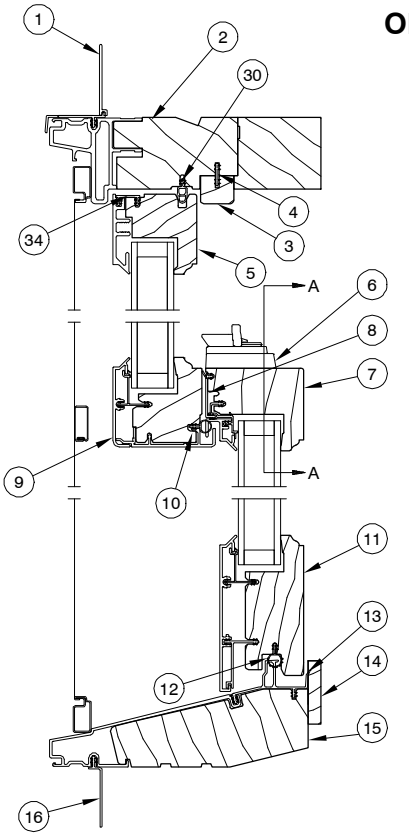

Head Jamb and Sill
Vertical Details

1. Head Jamb Nailing Fin/Drip Cap, V119
2. Head Jamb
3. Parting Stop, W12224
4. Connecting Barb, V803
5. Top Rail
6. Sash Lock
7. Bottom Check Rail
8. Bottom Check Rail Hardware Cover, V2478
9. Top Check Rail
10. Top Check Rail Weather Strip, V113
11. Bottom Rail
12. Bottom Rail Weather Strip, V147
13. Sill Thermal Break, V2191
14. Sill Liner, W11576
15. Sill
16. Sill Nailing Fin, V084
17. Bottom Sash Latch Assembly
18. Cord Guide Assembly
19. Operation Cord
20. Jamb Nailing Fin, V104
21. Jamb
22. Vinyl Jamb Liner, V2655
23. Jamb Liner, W12679
24. Stile Bottom Sash
25. Single Hung Exterior Cover, A2700
26. Mid Cover Base, V2432
27. Frame Weather Strip, V2682
28. Interior Jamb Cover, W11581
29. Exterior Hardware Cover, V2338
30. Head Jamb Weather Strip, V2419
31. Bottom Sash Balance Tube
32. Top Sash Balance Tube
33. Stile Top Sash
34. Sash Connector, V2401

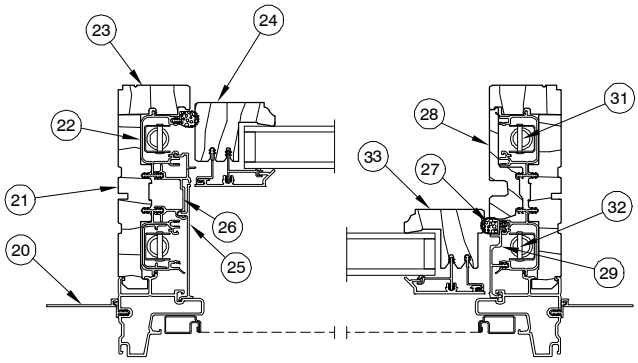

Jamb
Horizontal Details

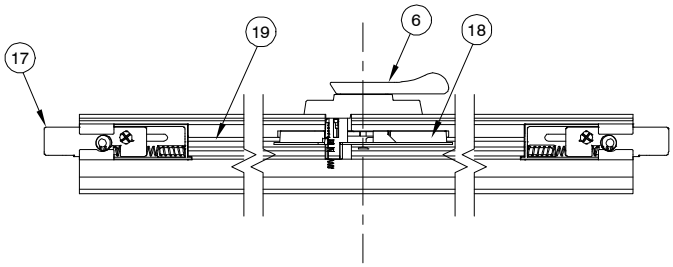

Check Rail

HARDWARE PARTS

When ordering replacement parts specify:

1. original order number;
2. type of unit;
3. part number;
4. description.

ILLUSTRATION *NOT TO SCALE*	DESCRIPTION	OPER./ COLOR	PART NO.
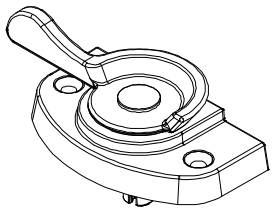	**Lock Handle Assembly** *Uses:* *2 – #7x1 1/4″ Phillips flat head screws*	BZ TP WH AB BS ORBZ PC SC SN	10501082 10501083 10501084 10501085 10501086 10501087 10501088 10501089 10501090
	Lock Handle Assembly – Non Tilt *Uses:* *2 – #7x1 1/4″ Phillips flat head screws*	BZ TP WH AB BS ORBZ PC SC SN	10501073 10501074 10501075 10501076 10501077 10501078 10501079 10501080 10501081
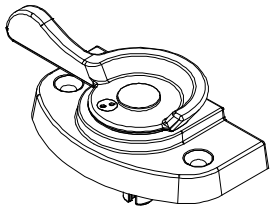	**Lock Handle Kit – Custodial** *Includes:* *1 – Custodial Tilt Lock Handle Assembly* *(TP – 10501071, WH – 10501072, BZ – 10501070)* *2 – #7–19x1 1/4″ Phillips flat head screws* *(TP – 11807122, WH – 11807115, BZ – 11807118)* *1 – Tamper Resistant Screw Kits* *(TP – 11800428, WH – 11800429, BZ – 11800430)*	TP WH BZ	11869262 11869263 11869264
	Lock Handle Kit – Custodial Non Tilt *Includes:* *1 – Custodial Non Tilt Lock Handle Assembly* *(TP – 10501211, WH – 10501212, BZ – 10501210)* *2 – #7–19x1 1/4″ Phillips flat head screws* *(TP – 11807122, WH – 11807115, BZ – 11807118)* *1 – Tamper Resistant Screw Kits* *(TP – 11800428, WH – 11800429, BZ – 11800430)*	TP WH BZ	11869265 11869266 11869267
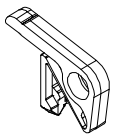	**Catch**		10501213
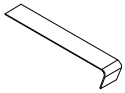	**Catch Spring**		10501214
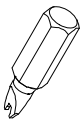	**Tool Bit – Tampered Resistant Screw**		10500543

HARDWARE PARTS

ILLUSTRATION *NOT TO SCALE*	DESCRIPTION	OPER./ COLOR	PART NO.
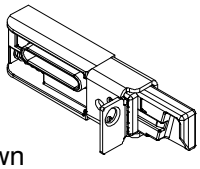 LH Shown	**Bottom Sash Latch Assembly** *Uses:* *1 – #6x1″ Phillips flat head screw* *1 – #8x1 1/4″ Phillips pan head screw* NOTE: Right hand screw in Left hand assembly and Left hand screw in Right hand assembly.	LH RH	10501407 10501406
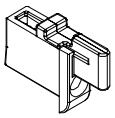	**Top Sash Tilt Latch Assembly** *Uses:* *1 – #6x1 1/2″ Phillips flat head screw*		10500738
	Lock Plunger Cap		10500868
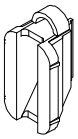	**Vent Receiver**	BG WH BK	10501377 10501379 10501378
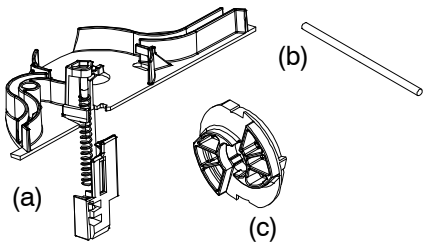	**Cord Guide Assembly Kit** *Includes:* *1 – Cord Guide Assembly (a)* *1 – Operating Cord (b)* *1 – Large Spool (c)*		11851052
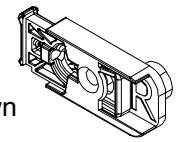 RH Shown	**Top Sash Latch Assembly** *Uses:* *1 – #7x7/8″ Phillips flathead wood screw*	LH RH	10501395 10501396
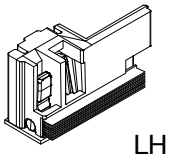 LH Shown	**Jamb Receiver Assembly**	LH RH	10500755 10500754
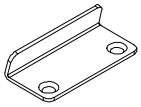	**Transom Sill Bracket** *Uses:* *2 – #7x3/4″ Phillips flathead wood screw*	SS	10500768
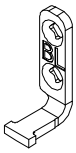 LH Shown	**Bottom Sash Tilt Pin** *Uses:* *2 – #7x1 1/4″ Phillips flathead wood screw*	LH RH	10500762 10500763
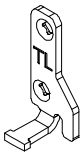 LH Shown	**Top Sash Tilt Pin** *Uses:* *2 – #7x3/4″ Phillips flathead wood screw*	LH RH	10500775 10500776
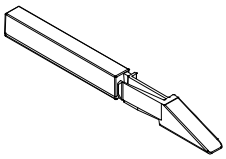	**Non–Tilt Sash Removal Tool Kit** *For UDH–NG, USH–NG, UDHRT–NG, and USHRT–NG Non–tilt units only* *Includes:* *2 – Non–Tilt Sash Removal Tool*	BK	11860094

HARDWARE PARTS

ILLUSTRATION *NOT TO SCALE*	DESCRIPTION	OPER./ COLOR	PART NO.
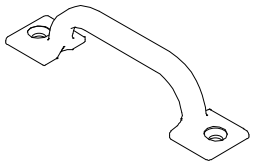	**Sash Lift** *Note: Screws are included with part numbers listed on right.* *1 – Sash lift* *2 – #8 x 1″ Slotted ovalhead sheet metal screws* *Part number listed below are for screws only.* *WH–11800887 AB–11800890* *BZ–11800888 SC–11800891* *TP –11800886 ORBZ–11800893* *BS–11800889 SN–11800894* *NOTE: Can not be used with retractable screen.*	TP BZ WH BS AB SC SN ORBZ	10500598 10500557 10500556 10500558 10500597 10500596 10500602 10500601
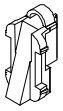	**Bottom Sash Limiter** *For UDH–NG, USH–NG, UDHRT–NG, and USHRT–NG* NOTE: Sold individually, 2 needed per unit.	BG BK WH	10501470 10501471 10501472
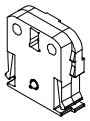	**Exterior Sash Lug Retainer** *For UDH–NG, USH–NG, UDHRT–NG, and USHRT–NG* *Uses:* *1 – #8–15x3/4″ Full thread 410 SS screw (11800208) not included*	BK	10500769
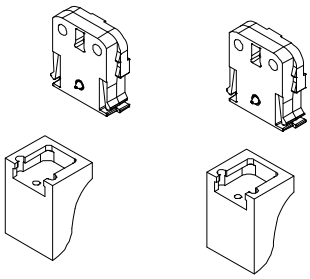	**Exterior Sash Lug Kit – Ogee Profile** *For UDH–NG, USH–NG, UDHRT–NG, and USHRT–NG* *Includes:* *2 – Exterior Sash Lugs – Ogee Profile* *2 – Exterior Sash Lug Retainers* *2 – #8–15x3/4″ Full thread 410 SS screw (11800208)*	SA HS CC CO CS EB WB FB SW EG BZ PB BN MSL MCP MLB CY GM SE	11894166 11894165 11894164 11894162 11894160 11894159 11894157 11894156 11894155 11894154 11894153 11894152 11894151 11894168 11894167 11894171 11894174 18894172 11894173
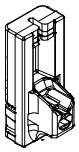	**Clutch Assembly**	BK	10501430
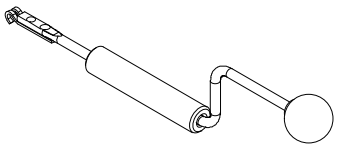	**Balance Tube Tensioning Tool**		05570910

HARDWARE PARTS

ILLUSTRATION *NOT TO SCALE*	DESCRIPTION	OPER./ COLOR	PART NO.
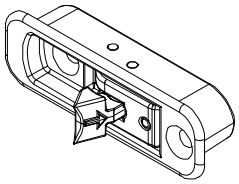	**Window Opening Control Device (WOCD) Installation Kit– Field Service Only** *Includes:* *2 – #8 x 1″ PH FH screws* *TP–11800910, WH–11800904, BZ–11800911, BS–11800912, AB–11800909, PC–11800907, SC–11800905, ORBZ–11800908, SN–11800906*	TP SW BZ BS AB PC SC ORBZ SN	11863001 11863002 11863003 11863004 11863005 11863006 11863007 11863008 11863009
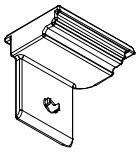	**WOCD Bumper, Stile – Field Service Only** *Includes:* *1 – #8–18 x 1″ PH FH screw SS–11805150*	 WH BG BK WH BG BK	**Right** 15709414 15709416 15709418 **Left** 15709413 15709415 15709417
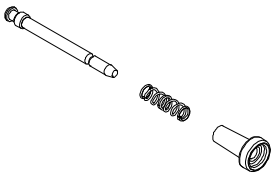	**Screen Plunger Kit – 3 Pc** *Base Screen* *Includes: 1 – Plunger Bolt (10500875)* *1 – Plunger Spring (05070421)* *1 – Plunger Cap (05070308 – BK)*		11851053
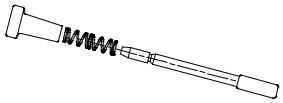	**Magnum Plunger and Spring Assembly** *Extruded Screen* *Includes: 1 – Plunger Bolt (05070309)* *1 – Plunger Spring (05070421)* *1 – Plunger Cap (05070308 – BK)*		10500706
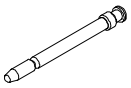	**Screen Plunger Bolt** *Base Screen*	Mill Finish	10500875
	Spring, Plunger		05070421
	Screen Plunger Cap	Black	05070308
	Screen Header Pin *Base Screen*		10500876

HARDWARE PARTS

ILLUSTRATION *NOT TO SCALE*	DESCRIPTION	OPER./ COLOR	PART NO.
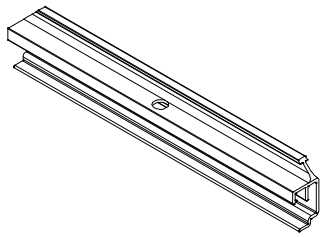	**Upper Jamb Performance Bracket** *A2771 – 6″ (152)* *Uses:* *1 – #8x1/2″ Phillips flathead screw*	WH AL BK	18869006 18869106 18869206
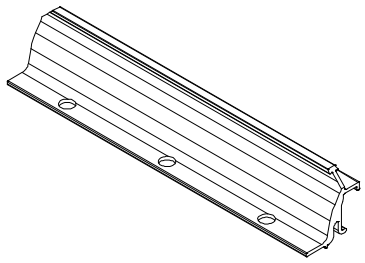	**Lower Jamb Performance Bracket** *A2791 – 6″ (152)* *Uses:* *3 – #8x3/4″ Phillips truss head screw*	WH AL BK	18866306 18866406 18866506
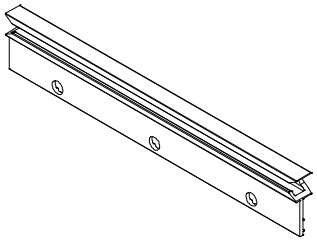	**Sash Performance Bracket** *A2805* *Uses:* *3 – #7x3/4″ Flathead screw*	BK	18866206
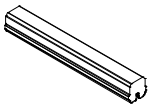	**Interior Sash Stop** *V2399*	WH BG BK	15709400 15709402 15709401
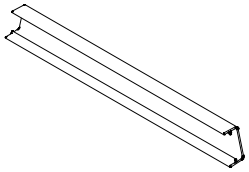	**Exterior Sash Stop** *V2257 – 8″ (203)* NOTE: For V2257 Top Sash Limiter see Aluminum and Vinyl Replacement parts page.	WH BG BK	15366608 15366708 15366508
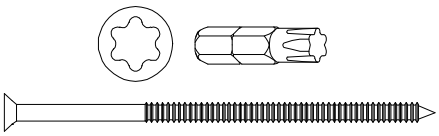	**Sash Installation Kit** *For CUDHP–NG* *Includes:* *24 – #9x3″ Torx flathead screws(11893125)* *1 – T–25 Insert Bit* *1 – Instruction (19915487)*		11869261
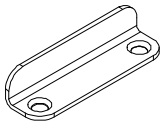	**IZ3/RT Picture/Transom Sill Bracket** *Uses:* *2 – #7x3/4″ Phillips flathead wood screw*	SS	10500764
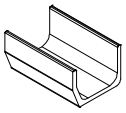	**Sill Reinforcement, IZ3** *A2766 – Lineal 144″ (3658)* *Uses:* *#8x1″ Phillips flathead screw*	**Lineal** WH AL BK	18865299 18865399 18865499

HARDWARE PARTS

ILLUSTRATION *NOT TO SCALE*	DESCRIPTION	OPER./ COLOR	PART NO.
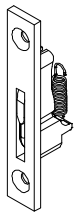	**Top Sash Tilt Latch Assembly – UDHRT–NG** *Uses:* *2 – #7 – 19 x 5/8″ PH FH screws (11800736)*		10500713
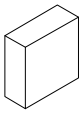	**Spacer – RT for Picture/Transom**		15350023
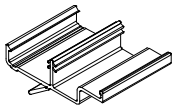	**Sash Retainer Cover** *V2509 – Lineal 120″ (3048)*		15708199
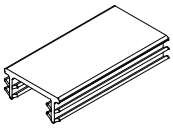	**Sash Connector** *V2401– Lineal 150″ (3810)*		15368999
	Jamb Weather Strip *V2682– Lineal 96″ (2438)*	**Lineal** WH BG BK	 15262896 15363096 15262996

BALANCE TUBES – BLOCK AND TACKLE

MARVIN Windows and Doors
Built around you.

ULTIMATE DOUBLE HUNG – NG
TO ORDER:

Block and Tackle balance tubes with ID Code can be ordered by part number (see chart below).

1. Provide the original order number when possible. The ID code is imprinted on the tube (see illustration below).
2. Specify top or bottom sash.
3. Specify quantity. Do **NOT** specify as pairs or sets. If one tube is needed, specify:quantity 1. If four tubes are needed, specify:quantity 4.

If experiencing operational difficulties please contact your Marvin Representative.

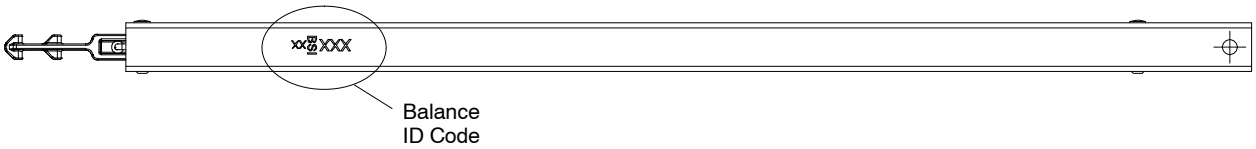

Balance Tube Assembly Part Numbers – Block and Tackle – Post 1/26/2015											
Balance ID Code		Balance ID Code		Balance ID Code		Balance ID Code		Balance ID Code		Balance ID Code	
A	Part #	AN	Part #	B	Part #	BN	Part #	C	Part #	CN	Part #
8A	10705008	8AN		8B	10705108	8BN		8C	10705208	8CN	
12A		12AN	10709012	12B	10705112	12BN		12C	10705212	12CN	
16A		16AN	10709016	16B	10705116	16BN	10709116	16C	10705216	16CN	
20A		20AN	10709020	20B		20BN	10709120	20C		20CN	10711220
24A		24AN	10709024	24B		24BN	10709124	24C		24CN	10711224
28A		28AN	10709028	28B	10705128	28BN	10709128	28C		28CN	10711228
32A		32AN	10709032	32B	10705132	32BN	10709132	32C	10710232	32CN	10711232
36A		36AN	10709036	36B		36BN	10709136	36C		36CN	10709236
40A		40AN	10709040	40B		40BN	10709140	40C		40CN	10709240
44A		44AN	10709044	44B		44BN	10709144	44C		44CN	10709244
48A		48AN	10709048	48B		48BN	10709148	48C	10710248	48CN	10709248
52A	10705052	52AN		52B	10705152	52BN		52C	10705252	52CN	
54A	10705054	54AN	10711054	54B	10705154	54BN	10711154	54C	10705254	54CN	

Balance Tube Assembly Part Numbers – Block and Tackle – Post 1/26/2015											
Balance ID Code		Balance ID Code		Balance ID Code		Balance ID Code		Balance ID Code		Balance ID Code	
D	Part #	DN	Part #	E	Part #	EN	Part #	F	Part #	G	Part #
8D	10705308	8DN		8E	10705408	8EN		8F	10705508	8G	
12D		12DN	10709312	12E		12EN	10709412	12F		12G	
16D	10710316	16DN		16E	10705416	16EN		16F	10705516	16G	10705616
20D	10710320	20DN		20E	10710420	20EN		20F	10705520	20G	
24D		24DN	10711324	24E	10710424	24EN		24F	10710524	24G	10710624
28D		28DN	10711328	28E	10710428	28EN		28F	10710528		
32D	10710332	32DN		32E	10710432	32EN					
36D	10710336	36DN		36E	10710436	36EN		Balance ID Code			
40D	10710340	40DN		40E	10710440	40EN					
44D	10710344	44DN		44E	10710444	44EN		FN	Part #		
48D	10710348	48DN		48E	10710448	48EN		12FN	10709512		
52D	10705352	52DN		52E		52EN		16FN			
54D	10705354	54DN		54E		54EN					

BALANCE TUBES – SPIRAL

ULTIMATE DOUBLE HUNG – NG
TO ORDER:

Spiral balance tubes can be ordered with the information that comes on the label adhered to the balance tube: Sales order line number, Marvin part number, and number of turns.

If the label is missing, follow instructions below to order your Spiral balance tube.

1. Provide the original order number when possible (note if it's top or bottom sash).
2. Balance type and Balance ID code, they are imprinted on balance tube (see illustration below).
3. Weight of sash.
4. Specify top or bottom sash.
5. Specify quantity. Do **NOT** specify as pairs or sets. If one tube is needed, specify:quantity 1. If four tubes are needed, specify:quantity 4.

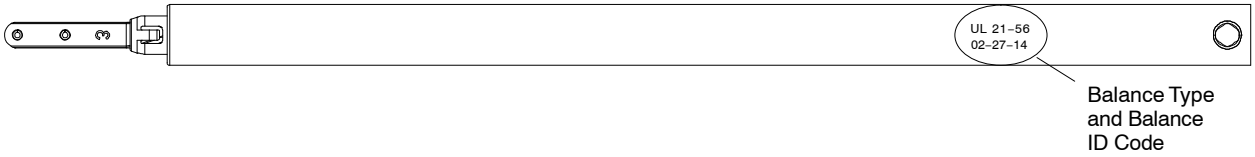

BALANCE TUBES – SPIRAL

ULTIMATE DOUBLE HUNG – NG
UL SERIES

Part Number	Balance ID Code	Length (in)	Part Number	Balance ID Code	Length (in)	Part Number	Balance ID Code	Length (in)
UL Series								
10715008	8–24	8	10715614	14–51	14	10715718	18–56	18
10715108	8–28	8	10715014	14–24	14	10715818	18–61	18
10715208	8–32	8	10715114	14–28	14	10715918	18–66	18
10715009	9–24	9	10715214	14–32	14	10715018	18–24	18
10715109	9–28	9	10715315	15–37	15	10715118	18–28	18
10715209	9–32	9	10715415	15–42	15	10715218	18–32	18
10715309	9–37	9	10715515	15–47	15	10715318	18–37	18
10715310	10–37	10	10715615	15–51	15	10715419	19–42	19
10715410	10–42	10	10715715	15–56	15	10715519	19–47	19
10715010	10–24	10	10715015	15–24	15	10715619	19–51	19
10715110	10–28	10	10715115	15–28	15	10715719	19–56	19
10715210	10–32	10	10715215	15–32	15	10715819	19–61	19
10715311	11–37	11	10715416	16–42	16	10715919	19–66	19
10715411	11–42	11	10715516	16–47	16	10715019	19–24	19
10715011	11–24	11	10715616	16–51	16	10715119	19–28	19
10715111	11–28	11	10715716	16–56	16	10715219	19–32	19
10715211	11–32	11	10715816	16–61	16	10715319	19–37	19
10715312	12–37	12	10715016	16–24	16	10715420	20–42	20
10715412	12–42	12	10715116	16–28	16	10715520	20–47	20
10715512	12–47	12	10715216	16–32	16	10715620	20–51	20
10715612	12–51	12	10715316	16–37	16	10715720	20–56	20
10715012	12–24	12	10715417	17–42	17	10715820	20–61	20
10715112	12–28	12	10715517	17–47	17	10715920	20–66	20
10715212	12–32	12	10715617	17–51	17	10716020	20–71	20
10715313	13–37	13	10715717	17–56	17	10715020	20–24	20
10715413	13–42	13	10715817	17–61	17	10715120	20–28	20
10715513	13–47	13	10715917	17–66	17	10715220	20–32	20
10715613	13–51	13	10715017	17–24	17	10715320	20–37	20
10715013	13–24	13	10715117	17–28	17	10706721	21–61	21
10715113	13–28	13	10715217	17–32	17	10706821	21–66	21
10715213	13–32	13	10715317	17–37	17	10706722	22–61	22
10715314	14–37	14	10715418	18–42	18	10706723	23–61	23
10715414	14–42	14	10715518	18–47	18	10706724	24–61	24
10715514	14–47	14	10715618	18–51	18	10706725	25–61	25

BALANCE TUBES – SPIRAL

ULTIMATE DOUBLE HUNG – NG
UL SERIES

Part Number	Balance ID Code	Length (in)	Part Number	Balance ID Code	Length (in)	Part Number	Balance ID Code	Length (in)
UL Series								
10706726	26–61	26	10706760	60–61	60	10706854	54–66	54
10706727	27–61	27	10706821	21–66	21	10706855	55–66	55
10706728	28–61	28	10706822	22–66	22	10706856	56–66	56
10706729	29–61	29	10706823	23–66	23	10706857	57–66	57
10706730	30–61	30	10706824	24–66	24	10706858	58–66	58
10706731	31–61	31	10706825	25–66	25	10706859	59–66	59
10706732	32–61	32	10706826	26–66	26	10706860	60–66	60
10706733	33–61	33	10706827	27–66	27	10706921	21–71	21
10706734	34–61	34	10706828	28–66	28	10706922	22–71	22
10706735	35–61	35	10706829	29–66	29	10706923	23–71	23
10706736	36–61	36	10706830	30–66	30	10706924	24–71	24
10706737	37–61	37	10706831	31–66	31	10706925	25–71	25
10706738	38–61	38	10706832	32–66	32	10706926	26–71	26
10706739	39–61	39	10706833	33–66	33	10706927	27–71	27
10706740	40–61	40	10706834	34–66	34	10706928	28–71	28
10706741	41–61	41	10706835	35–66	35	10706929	29–71	29
10706742	42–61	42	10706836	36–66	36	10706930	30–71	30
10706743	43–61	43	10706837	37–66	37	10706931	31–71	31
10706744	44–61	44	10706838	38–66	38	10706932	32–71	32
10706745	45–61	45	10706839	39–66	39	10706933	33–71	33
10706746	46–61	46	10706840	40–66	40	10706934	34–71	34
10706747	47–61	47	10706841	41–66	41	10706935	35–71	35
10706748	48–61	48	10706842	42–66	42	10706936	36–71	36
10706749	49–61	49	10706843	43–66	43	10706937	37–71	37
10706750	50–61	50	10706844	44–66	44	10706938	38–71	38
10706751	51–61	51	10706845	45–66	45	10706939	39–71	39
10706752	52–61	52	10706846	46–66	46	10706940	40–71	40
10706753	53–61	53	10706847	47–66	47	10706941	41–71	41
10706754	54–61	54	10706848	48–66	48	10706942	42–71	42
10706755	55–61	55	10706849	49–66	49	10706943	43–71	43
10706756	56–61	56	10706850	50–66	50	10706944	44–71	44
10706757	57–61	57	10706851	51–66	51	10706945	45–71	45
10706758	58–61	58	10706852	52–66	52	10706946	46–71	46
10706759	59–61	59	10706853	53–66	53	10706947	47–71	47

BALANCE TUBES – SPIRAL

ULTIMATE DOUBLE HUNG – NG
UL Series

Part Number	Balance ID Code	Length (in)	Part Number	Balance ID Code	Length (in)	Part Number	Balance ID Code	Length (in)
UL Series								
10706948	48–71	48	10707044	44–78	44	10708339	39–56	39
10706949	49–71	49	10707045	45–78	45	10708340	40–56	40
10706950	50–71	50	10707046	46–78	46	10708341	41–56	41
10706951	51–71	51	10707047	47–78	47	10708342	42–56	42
10706952	52–71	52	10707048	48–78	48	10708343	43–56	43
10706953	53–71	53	10707049	49–78	49	10708344	44–56	44
10706954	54–71	54	10707050	50–78	50	10708345	45–56	45
10706955	55–71	55	10707051	51–78	51	10708346	46–56	46
10706956	56–71	56	10707052	52–78	52	10708347	47–56	47
10706957	57–71	57	10707053	53–78	53	10708348	48–56	48
10706958	58–71	58	10707054	54–78	54	10708349	49–56	49
10706959	59–71	59	10707055	55–78	55	10708350	50–56	50
10706960	60–71	60	10707056	56–78	56	10708351	51–56	51
10707022	22–78	22	10707057	57–78	57	10708352	52–56	52
10707023	23–78	23	10707058	58–78	58	10708353	53–56	53
10707024	24–78	24	10707059	59–78	59	10708354	54–56	54
10707025	25–78	25	10707060	60–78	60	10708355	55–56	55
10707026	26–78	26	10708321	21–56	21	10708356	56–56	56
10707027	27–78	27	10708322	22–56	22	10708357	57–56	57
10707028	28–78	28	10708323	23–56	23	10708358	58–56	58
10707029	29–78	29	10708324	24–56	24	10708359	59–56	59
10707030	30–78	30	10708325	25–56	25	10708360	60–56	60
10707031	31–78	31	10708326	26–56	26	10715008	8–24	8
10707032	32–78	32	10708327	27–56	27	10715009	9–24	9
10707033	33–78	33	10708328	28–56	28	10715108	8–28	8
10707034	34–78	34	10708329	29–56	29	10715109	9–28	9
10707035	35–78	35	10708330	30–56	30	10715208	8–32	8
10707036	36–78	36	10708331	31–56	31	10715209	9–32	9
10707037	37–78	37	10708332	32–56	32	10715309	9–37	9
10707038	38–78	38	10708333	33–56	33	10715310	10–37	10
10707039	39–78	39	10708334	34–56	34	10715311	11–37	11
10707040	40–78	40	10708335	35–56	35	10715312	12–37	12
10707041	41–78	41	10708336	36–56	36	10715313	13–37	13
10707042	42–78	42	10708337	37–56	37	10715314	14–37	14
10707043	43–78	43	10708338	38–56	38	10715315	15–37	15

BALANCE TUBES – SPIRAL

ULTIMATE DOUBLE HUNG – NG
UL Series

Part Number	Balance ID Code	Length (in)	Part Number	Balance ID Code	Length (in)	Part Number	Balance ID Code	Length (in)
UL Series								
10715410	10–42	10	10715444	44–42	44	10715529	29–47	29
10715411	11–42	11	10715445	45–42	45	10715530	30–47	30
10715412	12–42	12	10715446	46–42	46	10715531	31–47	31
10715413	13–42	13	10715447	47–42	47	10715532	32–47	32
10715414	14–42	14	10715448	48–42	48	10715533	33–47	33
10715415	15–42	15	10715449	49–42	49	10715534	34–47	34
10715416	16–42	16	10715450	50–42	50	10715535	35–47	35
10715417	17–42	17	10715451	51–42	51	10715536	36–47	36
10715418	18–42	18	10715452	52–42	52	10715537	37–47	37
10715419	19–42	19	10715453	53–42	53	10715538	38–47	38
10715420	20–42	20	10715454	54–42	54	10715539	39–47	39
10715421	21–42	21	10715455	55–42	55	10715540	40–47	40
10715422	22–42	22	10715456	56–42	56	10715541	41–47	41
10715423	23–42	23	10715457	57–42	57	10715542	42–47	42
10715424	24–42	24	10715458	58–42	58	10715543	43–47	43
10715425	25–42	25	10715459	59–42	59	10715544	44–47	44
10715426	26–42	26	10715460	60–42	60	10715545	45–47	45
10715427	27–42	27	10715512	12–47	12	10715546	46–47	46
10715428	28–42	28	10715513	13–47	13	10715547	47–47	47
10715429	29–42	29	10715514	14–47	14	10715548	48–47	48
10715430	30–42	30	10715515	15–47	15	10715549	49–47	49
10715431	31–42	31	10715516	16–47	16	10715550	50–47	50
10715432	32–42	32	10715517	17–47	17	10715551	51–47	51
10715433	33–42	33	10715518	18–47	18	10715552	52–47	52
10715434	34–42	34	10715519	19–47	19	10715553	53–47	53
10715435	35–42	35	10715520	20–47	20	10715554	54–47	54
10715436	36–42	36	10715521	21–47	21	10715555	55–47	55
10715437	37–42	37	10715522	22–47	22	10715556	56–47	56
10715438	38–42	38	10715523	23–47	23	10715557	57–47	57
10715439	39–42	39	10715524	24–47	24	10715558	58–47	58
10715440	40–42	40	10715525	25–47	25	10715559	59–47	59
10715441	41–42	41	10715526	26–47	26	10715560	60–47	60
10715442	42–42	42	10715527	27–47	27	10715612	12–51	12
10715443	43–42	43	10715528	28–47	28	10715613	13–51	13

BALANCE TUBES – SPIRAL

ULTIMATE DOUBLE HUNG – NG
UL Series

Part Number	Balance ID Code	Length (in)	Part Number	Balance ID Code	Length (in)
UL Series					
10715614	14–51	14	10715646	46–51	46
10715615	15–51	15	10715647	47–51	47
10715616	16–51	16	10715648	48–51	48
10715617	17–51	17	10715649	49–51	49
10715618	18–51	18	10715650	50–51	50
10715619	19–51	19	10715651	51–51	51
10715620	20–51	20	10715652	52–51	52
10715621	21–51	21	10715653	53–51	53
10715622	22–51	22	10715654	54–51	54
10715623	23–51	23	10715655	55–51	55
10715624	24–51	24	10715656	56–51	56
10715625	25–51	25	10715657	57–51	57
10715626	26–51	26	10715658	58–51	58
10715627	27–51	27	10715659	59–51	59
10715628	28–51	28	10715660	60–51	60
10715629	29–51	29	10715715	15–56	15
10715630	30–51	30	10715716	16–56	16
10715631	31–51	31	10715717	17–56	17
10715632	32–51	32	10715718	18–56	18
10715633	33–51	33	10715719	19–56	19
10715634	34–51	34	10715720	20–56	20
10715635	35–51	35	10715816	16–61	16
10715636	36–51	36	10715817	17–61	17
10715637	37–51	37	10715818	18–61	18
10715638	38–51	38	10715819	19–61	19
10715639	39–51	39	10715820	20–61	20
10715640	40–51	40	10715917	17–66	17
10715641	41–51	41	10715918	18–66	18
10715642	42–51	42	10715919	19–66	19
10715643	43–51	43	10715920	20–66	20
10715644	44–51	44	10716020	20–71	20
10715645	45–51	45			

BALANCE TUBES – SPIRAL

ULTIMATE DOUBLE HUNG – NG
ULX Series

Part Number	Balance ID Code	Length (in)	Part Number	Balance ID Code	Length (in)	Part Number	Balance ID Code	Length (in)
ULX Series								
10716129	29–84	29	10716231	31–94	31	10707334	34–105	34
10716130	30–84	30	10716232	32–94	32	10707335	35–105	35
10716131	31–84	31	10707233	33–94	33	10707336	36–105	36
10716132	32–84	32	10707234	34–94	34	10707337	37–105	37
10707133	33–84	33	10707235	35–94	35	10707338	38–105	38
10707134	34–84	34	10707236	36–94	36	10707339	39–105	39
10707135	35–84	35	10707237	37–94	37	10707340	40–105	40
10707136	36–84	36	10707238	38–94	38	10707341	41–105	41
10707137	37–84	37	10707239	39–94	39	10707342	42–105	42
10707138	38–84	38	10707240	40–94	40	10707343	43–105	43
10707139	39–84	39	10707241	41–94	41	10707344	44–105	44
10707140	40–84	40	10707242	42–94	42	10707345	45–105	45
10707141	41–84	41	10707243	43–94	43	10707346	46–105	46
10707142	42–84	42	10707244	44–94	44	10707347	47–105	47
10707143	43–84	43	10707245	45–94	45	10707348	48–105	48
10707144	44–84	44	10707246	46–94	46	10707349	49–105	49
10707145	45–84	45	10707247	47–94	47	10707350	50–105	50
10707146	46–84	46	10707248	48–94	48	10707351	51–105	51
10707147	47–84	47	10707249	49–94	49	10707352	52–105	52
10707148	48–84	48	10707250	50–94	50	10707353	53–105	53
10707149	49–84	49	10707251	51–94	51	10707354	54–105	54
10707150	50–84	50	10707252	52–94	52	10707355	55–105	55
10707151	51–84	51	10707253	53–94	53	10707356	56–105	56
10707152	52–84	52	10707254	54–94	54	10707357	57–105	57
10707153	53–84	53	10707255	55–94	55	10707358	58–105	58
10707154	54–84	54	10707256	56–94	56	10707359	59–105	59
10707155	55–84	55	10707257	57–94	57	10707360	60–105	60
10707156	56–84	56	10707258	58–94	58	10716430	30–117	30
10707157	57–84	57	10707259	59–94	59	10716431	31–117	31
10707158	58–84	58	10707260	60–94	60	10716432	32–117	32
10707159	59–84	59	10716330	30–105	30	10707433	33–117	33
10707160	60–84	60	10716331	31–105	31	10707434	34–117	34
10716229	29–94	29	10716332	32–105	32	10707435	35–117	35
10716230	30–94	30	10707333	33–105	33	10707436	36–117	36

BALANCE TUBES – SPIRAL

ULTIMATE DOUBLE HUNG – NG
ULX Series

Part Number	Balance ID Code	Length (in)	Part Number	Balance ID Code	Length (in)	Part Number	Balance ID Code	Length (in)
ULX Series								
10707437	37–117	37	10716530	30–128	30	10707554	54–128	54
10707438	38–117	38	10716531	31–128	31	10707555	55–128	55
10707439	39–117	39	10716532	32–128	32	10707556	56–128	56
10707440	40–117	40	10707533	33–128	33	10707557	57–128	57
10707441	41–117	41	10707534	34–128	34	10707558	58–128	58
10707442	42–117	42	10707535	35–128	35	10707559	59–128	59
10707443	43–117	43	10707536	36–128	36	10707560	60–128	60
10707444	44–117	44	10707537	37–128	37	10716129	29–84	29
10707445	45–117	45	10707538	38–128	38	10716130	30–84	30
10707446	46–117	46	10707539	39–128	39	10716131	31–84	31
10707447	47–117	47	10707540	40–128	40	10716132	32–84	32
10707448	48–117	48	10707541	41–128	41	10716229	29–94	29
10707449	49–117	49	10707542	42–128	42	10716230	30–94	30
10707450	50–117	50	10707543	43–128	43	10716231	31–94	31
10707451	51–117	51	10707544	44–128	44	10716232	32–94	32
10707452	52–117	52	10707545	45–128	45	10716330	30–105	30
10707453	53–117	53	10707546	46–128	46	10716331	31–105	31
10707454	54–117	54	10707547	47–128	47	10716332	32–105	32
10707455	55–117	55	10707548	48–128	48	10716430	30–117	30
10707456	56–117	56	10707549	49–128	49	10716431	31–117	31
10707457	57–117	57	10707550	50–128	50	10716432	32–117	32
10707458	58–117	58	10707551	51–128	51	10716530	30–128	30
10707459	59–117	59	10707552	52–128	52	10716531	31–128	31
10707460	60–117	60	10707553	53–128	53	10716532	32–128	32

REPLACEMENT WOOD PARTS

ULTIMATE DOUBLE HUNG – NG
TO ORDER:

1. length;

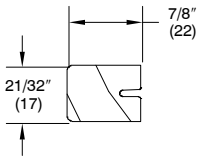

W11578 – Parting Stop

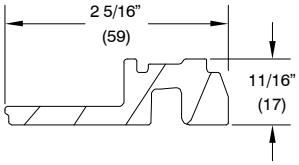

W11581 – Interior Jamb Cover

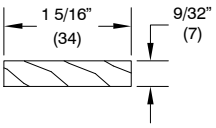

W11576 – Sill Liner

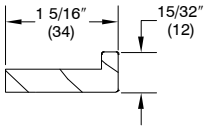

W11825 – Sill Liner UDHP–NG and UDHT–NG

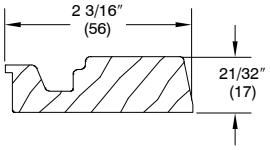

W12061 – Sill Filler UDHT–NG

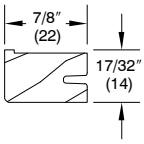

W12407– Head Jamb Stop UDHP–NG and IZ3

NOTE:Any picture units **Pre 1/05/2015** will require all 3 stops to be replaced.

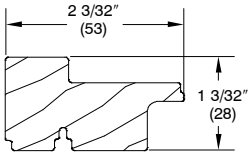

W11906 – Interior Cover UDHT–NG

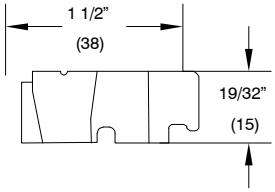

W12679 – Jamb Liner

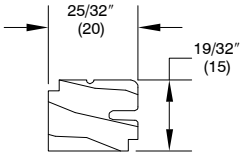

W12279 – Jamb Liner UGHP–NG

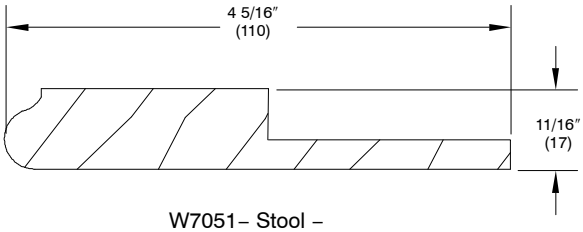

W7051– Stool – Field Applied

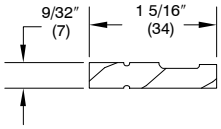

W12392– Sill Liner, IZ3 CUDH–NG

ULTIMATE DOUBLE HUNG ROUND TOP – NG

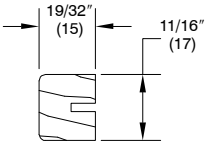

W12224– Stop. Head Jamb, Radius UDHRT–NG

VINYL PARTS

ULTIMATE DOUBLE HUNG – NG TO ORDER:

1. Original order number
2. profile number;
3. call number or rough opening;
4. length;
5. clad color.

Default Exterior Vinyl Component Colors	
Exterior Clad Color	**Component Color**
Stone White, Bright Silver	White
Pebble Grey, Bahama Brown, Evergreen, Hampton Sage, Sierra White, Coconut Cream, Cashmere, Wineberry, Cascade Blue	Beige
Bronze, Ebony, Cadet Grey, Copper, Clay, Gunmetal, Liberty Bronze, Suede	Black

Default Interior Vinyl Component Colors	
Factory Interior Finish	**Component Color**
Prime Interior Pigmented Top Coat (PIF)	White
Bare: Pine, White Oak, Cherry, Douglas Fir, Maple Interior Clear Top Coat: same as Bare Interior Stain: Wheat, Honey	Beige
Bare: Mahogany, Walnut Interior Clear Top Coat: same as Bare Interior Stain: Hazelnut, Leather, Cabernet, Espresso	Black

V147 – Sill Weather Strip Bottom Check Rail (BK only) – UDH–NG, USH–NG, UDHP–NG and UDHT–NG Header – UDHP–NG and UDHT–NG

V2682 – Jamb Interior Weather Strip UDH–NG, USH–NG and UDHT–NG

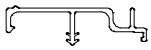

V2338 – Exterior Weather Strip Hardware Cover UDH–NG and USH–NG

V2392 – Header Interior Weather Strip UDH–NG and USH–NG

V2478– Bottom Check Rail Exterior Weather Strip Hardware Cover UDH–NG and USH–NG

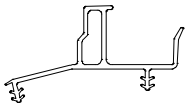

V2191 – Sill Thermal Break/Liner UDH–NG, UDHP–NG, UDHT–NG and USH–NG

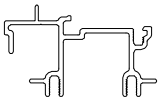

V2432* – Mid Exterior Weather Strip Cover Base UDH–NG and USH–NG

V113– Top Check Rail Exterior Weather Strip UDH–NG and USH–NG

V2257 – Top Sash Limiter Exterior Weather Strip UDH–NG, USH–NG UGHRT–NG and USHRT–NG

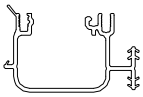

V2655 – Vinyl Jamb Liner Exterior Weather Strip UDH–NG, UDHT–NG and USH–NG

V803 – Connecting Barb

* V2432 – If your original unit had performance bracket then a secondary fabrication is needed to accommodate the brackets.

ULTIMATE DOUBLE HUNG ROUND TOP – NG

V2419– Head Jamb Weather Strip UDHRT–NG, USHRT–NG, UDHRTP–NG and UDHRTT–NG

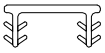

V2401– Sash Connector UDHRT–NG, USHRT–NG, UDHRTP–NG and UDHRTT–NG

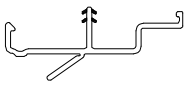

V2509 – Sash Retainer Cover UDHRTP–NG and UDHRTT–NG

ALUMINUM PARTS

ULTIMATE DOUBLE HUNG – NG TO ORDER:

1. Original order number
2. profile number;
3. call number or rough opening;
4. length;
5. clad color.

Default Exterior Vinyl Component Colors	
Exterior Clad Color	**Component Color**
Stone White, Bright Silver	White
Pebble Grey, Bahama Brown, Evergreen, Hampton Sage, Sierra White, Coconut Cream, Cashmere, Wineberry, Cascade Blue	Beige
Bronze, Ebony, Cadet Grey, Copper, Clay, Gunmetal, Liberty Bronze, Suede	Black

Default Interior Vinyl Component Colors	
Factory Interior Finish	**Component Color**
Prime Interior Pigmented Top Coat (PIF)	White
Bare: Pine, White Oak, Cherry, Douglas Fir, Maple Interior Clear Top Coat: same as Bare Interior Stain: Wheat, Honey	Beige
Bare: Mahogany, Walnut Interior Clear Top Coat: same as Bare Interior Stain: Hazelnut, Leather, Cabernet, Espresso	Black

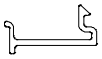

A2615 – Exterior Jamb Cover UDH–NG

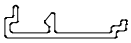

A2460 – Mid Exterior Jamb Cover UDH–NG

A2766 – Sill Reinforcement, IZ3 UDH–NG and USH–NG

A2700 – Exterior Cover USH–NG

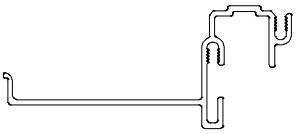

A2681 – Exterior Head Jamb or Jamb Cover UDHP–NG

RETRACTABLE SCREEN PARTS

When ordering replacement parts specify:

1. original order number;
2. type of unit;
3. part number;
4. description.

ILLUSTRATION *NOT TO SCALE*	DESCRIPTION	OPER./ COLOR	PART NO.
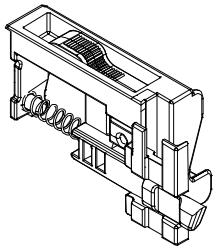	**Carrier Bolt Assembly** *For UDH–NG and USH–NG*	**LH** BG WH BK **RH** BG WH BK	 10501387 10501389 10501391 10501386 10501388 10501390
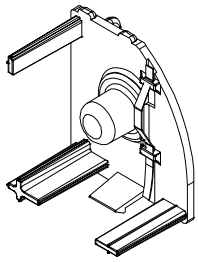	**Free Spin End with Leaf Spring** *Service Only* *For UDH–NG and USH–NG*		10501392
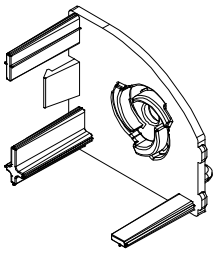	**Ratchet End Cap** *Service Only* *For UDH–NG and USH–NG*		10500867

RETRACTABLE SCREEN CARTRIDGE

WHEN ORDERING REPLACEMENT PARTS:

1. order through configured parts in OMS

Service Only Parts

Screen Cartridge Assembly – Full Assembly

Includes: spring assembly, free spin end cap, ratchet end cap, interior housing, pull bar, pull bar backer, pull bar seal, carrier bolt assemblies, screen mesh, spline tube, 4 interior gaskets, screws, warning label, packaging

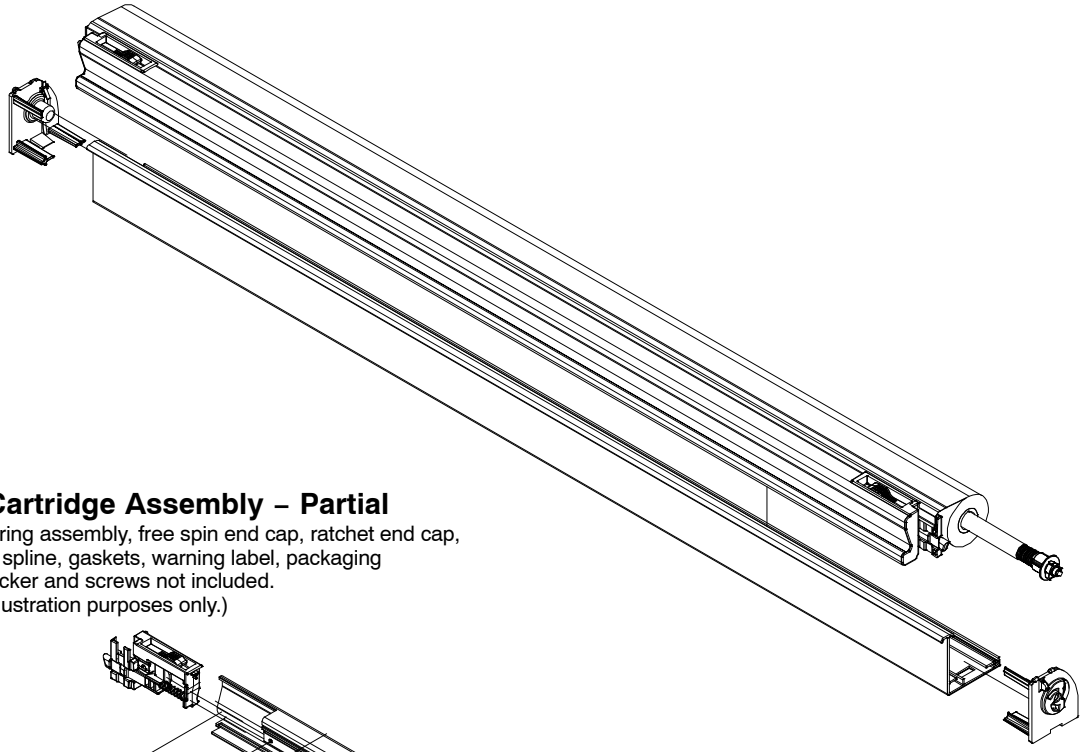

Screen Cartridge Assembly – Partial

Includes: spring assembly, free spin end cap, ratchet end cap, mesh, tube, spline, gaskets, warning label, packaging
(Pull bar, backer and screws not included.
Shown for illustration purposes only.)

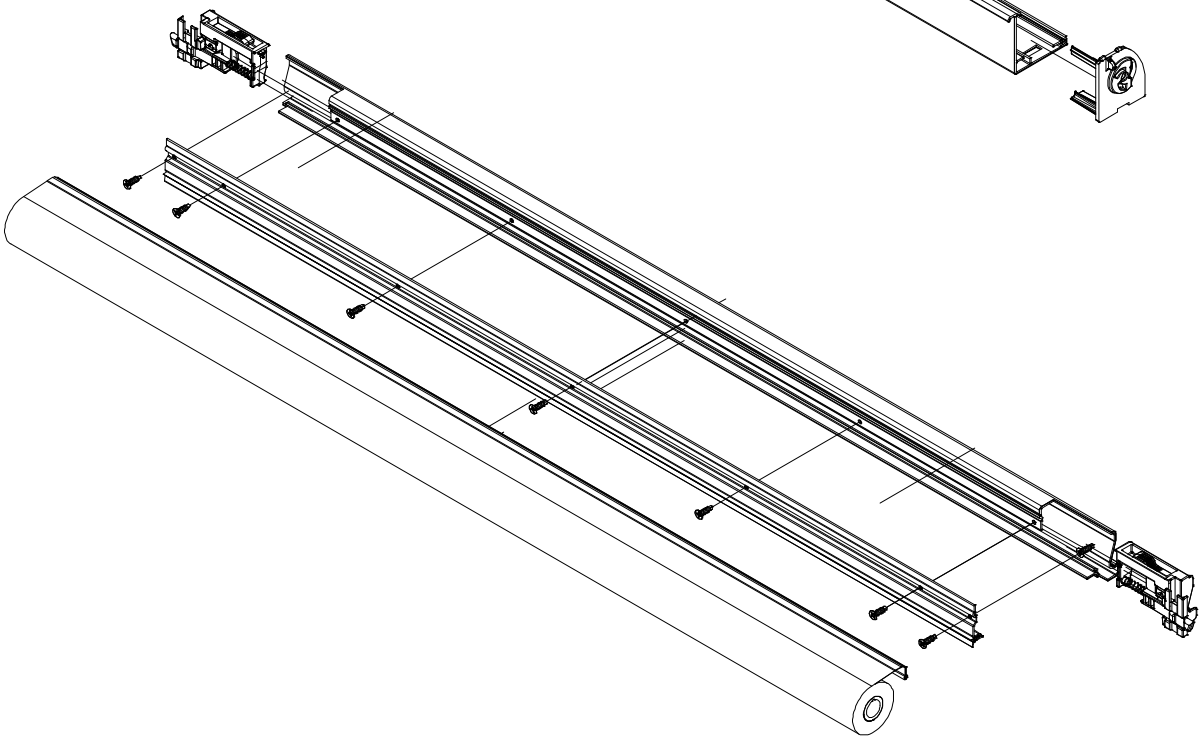

RETRACTABLE SCREEN PARTS

WHEN ORDERING REPLACEMENT PARTS SPECIFY:

1. original order number;
2. type of unit;
3. part number;
4. pull bar seal;
5. description.

V2372 – Pull Bar Fin
(Black or Beige)

Service Only Parts

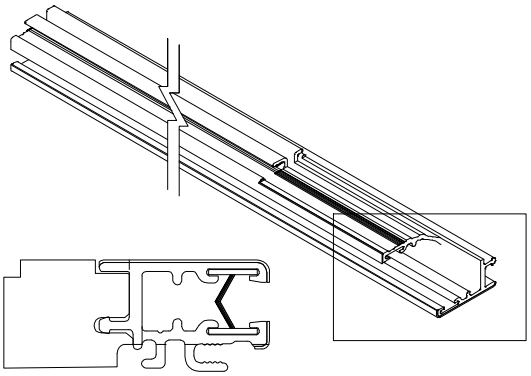

C0135 and V2627 – Screen Track Assembly
Wood Jamb liner not included

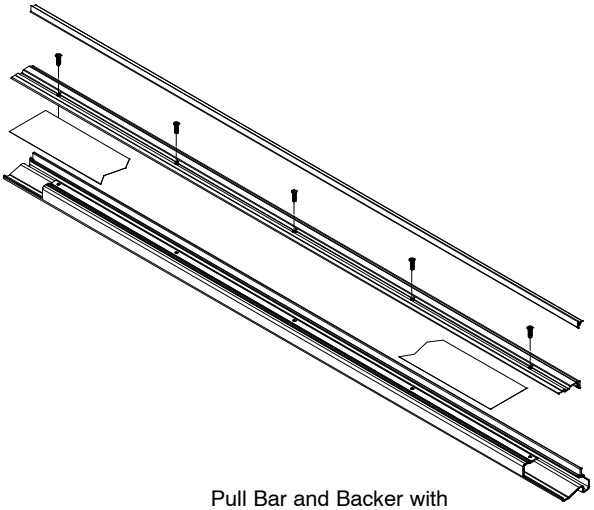

Pull Bar and Backer with
Fin and screws

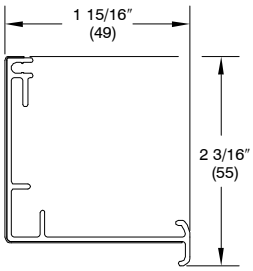

C0117 – Interior Housing

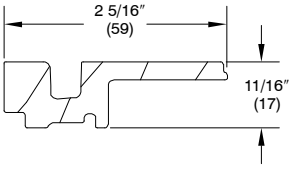

W11581 – Interior
Jamb Cover

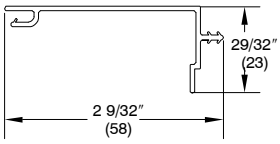

V2366 – Exterior
Housing

OBSOLETE HARDWARE PARTS

ILLUSTRATION *NOT TO SCALE*	DESCRIPTION	OPER./ COLOR	PART NO.
RH Shown 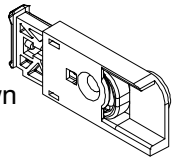	**Top Sash Latch Assembly – Pre 9/29/2014** *Uses:* *1 – #7x7/8″ Phillips flathead wood screw*	LH RH	10500757 10500758
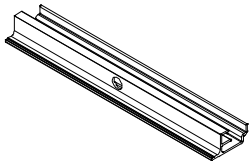	**Upper Jamb Performance Bracket – Pre 10/20/2014** *A2701* *Uses:* *1 – #8x1/2″ Phillips flathead screw*	WH AL BK	18840006 18840106 18840206
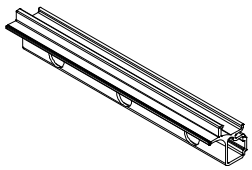	**Lower Jamb Performance Bracket – Pre 10/20/2014** *A2696* *Uses:* *2 – #8x3/4″ Phillips truss head screw*	WH AL BK	18840406 18840506 18840606
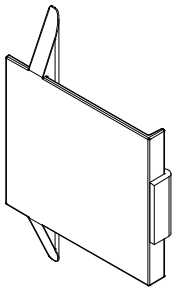	**Sash Removal Tool Kit** *For UDH–NG and USH–NG Non–tilt units only* *Includes: 2 – Non–Tilt Sash Removal Tool Assembly (11860092)*	BK	11860094

OBSOLETE BALANCE TUBES – B & T

ULTIMATE DOUBLE HUNG – NG
TO ORDER:

Block and Tackle balance tubes with ID Code can ONLY be ordered by contacting your Marvin Representative. Use the table below for reference only.

If experiencing operational difficulties please contact your Marvin Representative.

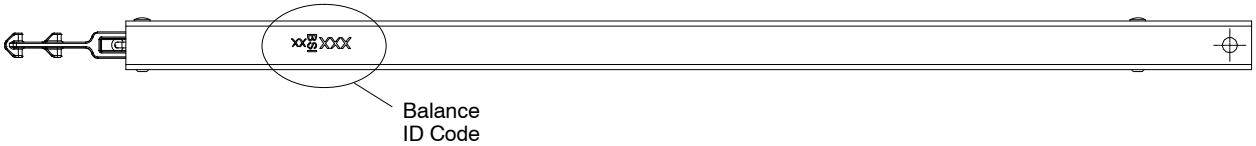

Balance Tube Assembly Part Numbers – Block and Tackle – Pre 1/26/2015 – Obsolete

Balance ID Code		Balance ID Code		Balance ID Code		Balance ID Code		Balance ID Code		Balance ID Code	
A	**Part #**	**B**	**Part #**	**C**	**Part #**	**D**	**Part #**	**E**	**Part #**	**F**	**Part #**
12A	10705012	20B	10705120	20C	10705220	12D	10705312	12E	10705412	16F	10705516
16A	10705016	24B	10705124	24C	10705224	16D	10705316	20E	10705420	24F	10705524
20A	10705020	36B	10705136	28C	10705228	20D	10705320	24E	10705424	**G**	
24A	10705024	40B	10705140	32C	10705232	24D	10705324	28E	10705428	24G	10705624
28A	10705028	44B	10705144	36C	10705236	28D	10705328	**EN**		**H**	
32A	10705032	48B	10705148	40C	10705240	32D	10705332	20EN	10709420	16H	10705716
36A	10705036	**BN**		44C	10705244	36D	10705336	28EN	10709428	**I**	
40A	10705040	12BN	10709112	48C	10705248	40D	10705340			16I	10705816
44A	10705044			**CN**		44D	10705344				
48A	10705048			16CN	10709216	48D	10705348				
				20CN	10709220	54D	10705354				
				24CN	10709224	**DN**					
				28CN	10709228	16DN	10709316				
				32CN	10709232	20DN	10709320				
						28DB	10709328				

OBSOLETE VINYL PARTS

ULTIMATE DOUBLE HUNG – NG
TO ORDER:

1. Original order number
2. profile number;
3. call number or rough opening;
4. length;
5. clad color.

V2403 – Top Check Rail
Weather Strip
Pre 9/29/2014
UDH–NG and USH–NG

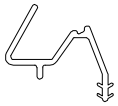

V2386 – Sash Retainer
UDHP–NG