WOOD AND CLAD SLIDING PATIO DOOR

Table of Contents

	PAGE
History – Sliding Patio Door	2
History – Obsolete Trimline Patio Door	3
Part Identification	
Part Identification – Wood Sliding Patio Door – OX or XO	4
Part Identification – Wood Sliding Patio Door Stationary	5
Part Identification – Wood Sliding Patio Door – XOO, OXO or OXXO Jamb Detail	6
Part Identification – Clad Sliding Patio Door – OX or XO	7
Part Identification – Clad Sliding Patio Door Stationary	8
Part Identification – Clad Sliding Patio Door – XOO, OXO or OXXO Jamb Detail	9
Parts	
Hardware and Miscellaneous	10
Replacement Wood Parts	15
Replacement Vinyl, Fiberglass or Aluminum Parts	16
Panel Replacement	17
Weather Strip	18
Obsolete Parts – Sliding Patio Door	20
Obsolete Weather Strip	21
Obsolete Parts – Trimline Patio Door	22
Obsolete Replacement Wood Parts – Trimline Patio Door	25
Obsolete Replacement Vinyl, Fiberglass or Aluminum – Trimline Patio Door	26
Obsolete Weather Strip – Trimline Patio Door	27
Obsolete Panel Replacement – Trimline Patio Door	30

Screens – See Door Screen Chapter

ATTENTION:

- Specification and technical data are subject to change without notice.
- Numbers listed in parentheses ( ) are metric equivalents in millimeters rounded to the nearest whole number.

HISTORY

PRODUCED	UNIT TYPE	FEATURES OR CHANGES	DISCONTINUED
2003	Wood and Clad Sliding Patio Door	11/03/03 Introduced Sliding Patio Doors.	Present
2005	Wood and Clad Sliding Patio Door	Introduced optional Bronze Ultrex sill with Black weather strip.	Present
2005	Wood and Clad Sliding Patio Door	Added BS PVD hardware finish to door handles.	Present
2006	Wood and Clad Sliding Patio Door	3/27/06 Introduced the OXXO configuration to the Sliding Patio Door line. Added SN PVD hardware finish to door handles.	Present
2006	Wood and Clad Sliding Patio Door	7/24/06 Discontinued retro 6–5 height and replaced with 6–6 height. Frame OSM for 6–6 height is 3/4″ taller than 6–5 doors. Frame OSM for 6–6 width is 11/16″ wider (one panel), 1 3/8″ wider (two panel) and 2 1/16″ wider (three panel).	Present
2006	Wood and Clad Sliding Patio Door	11/2006 Discontinued stationary panel top rail spacer (W8452) and replaced with a stationary bracket. Updated W7504 stationary panel head jamb cover profile.	Present
2008	Wood and Clad Sliding Patio Door	6/02/2008 Introduced charcoal colored high transparency screen mesh (CH HI–TRAN) as an option on all window and door products (including combinations).	Present
2009	All	3/23/2009 Added LoĒ^3-366™ as a standard option for all products. Added Cedro Macho as a standard option for all clad products.	Present
2009	Wood and Clad Sliding Patio Door	5/26/2009 Introduced the new Low Profile Sill as an option to the Sliding Patio Door and Ultimate Sliding French Door.	Present
2010	All Doors	2/22/2010 Added Dark Bronze hardware finish to doors.	Present
2011	All Doors	04/25/2011 Added LoĒ-180™ as a standard option for all products. White painted interior finish option introduced for all products.	Present
2012	Wood and Clad Sliding Patio Door	10–29–2012 Interior Square Sticking/Glazing Bead option introduced. 12–17–2012 Introduced Clear interior finish option on all products.	Present
2013	Wood and Clad Sliding Patio Door	4–29–2013 – Retro height 66 will be designated with an “R” in the CN. Introduced interior stain options. Stain colors are Wheat, Honey, Leather, Hazelnut, Cabernet and Espresso. 12/16/2013 – Interior Shades option introduced.	Present
2014	Wood and Clad Sliding Patio Door	2/24/2014 – Introduced two Pearlescent clad colors – Bright Silver and Copper. Discontinued two clad colors – Sherwood Green and Cobalt Blue. Removed screen information and added new chapter for screen to manual.	Present
2014	Wood and Clad Sliding Patio Door	8/25/2014 – Introduced Low E2 and Low E3 glass terminology. Clear brick mould casing and subsills will now be call out as non finger–jointed brick mould casing and subsills.	Present

HISTORY

PRODUCED	UNIT TYPE	FEATURES OR CHANGES	DISCONTINUED
1988	Wood Retro Patio Door	Unit features 3/4″ insulating glass, mortise style locking system, exterior (non-keyed) handle and wood interior handle. All models including three panel doors feature continuous header and sill.	Present
		Bare wood exterior.	1989
		Bronze exterior (non keyed) handle.	1991
		Lexan sill with wood sill core.	1991
1989	Wood Retro Patio Door	Primed exterior standard.	1998
1990	Clad Retro Patio Door	Unit features extruded aluminum clad exterior, 3/4″ insulating glass, clad glazing cap, mortise style locking system, exterior (non-keyed) handle and wood interior handle. All models including three panel doors feature continuous header and sill.	Present
		Bronze exterior (non-keyed) handle.	1991
		Lexan sill with wood sill core.	1991
1991	Wood and Clad Retro Patio Door	External component parts changed to beige including exterior (non-keyed) handle.	Present
		Sill redesigned from wood sill core to a composite sill core (this resulted in panel size change also affecting grilles, screens and glass sizes).	1995
1992	Wood and Clad Retro Patio Door	Retro CN 6–8 height was changed to a CN 6–5 height. A full size CN 6–8 height door was added to product line. Term “Retro” changed to Trimline.	Present
1992	Wood Trimline Patio Door	Simulated divided lite option introduced.	Present
1993	Clad Trimline Patio Door	Clad simulated divided lite and factory installed brick mould casing introduced.	Present
1995	Wood and Clad Trimline Patio Door	Sill redesigned from Lexan cover with a composite sill core to a one piece composite sill (no panel size change). Added roller track and cover, redesigned leveling block and added leveling block filler, replaced dust block assembly with hydroseal and redesigned panel drip. Panel drip replaced sill weather strip. Redesigned interlocks (and added interlock end caps with gaskets), redesigned operating jamb parting stop weather strip.	Present
1998	Wood and Clad Trimline Patio Door	1/98 Interlocks (V471,472,& 747) replaced with V714 & V715. Hydroseal and end cap replaced with dust block, dust block support, and gasket. Operator jamb weather strip (V777) replaced by V735.	Present
		5/98 Sill Roller track (V769) replaced with V786. Operator panel drip/weather strip (V760) replaced with V800 panel drip and V791 sill weather strip. Sill door stop (W7287) replaced with V807.	Present
		8/98 Added 8–0 height to standard sizes, also available in special sizes. Multi–point mortise lock standard. Performance ratings now DP 30 (up to 6/8), DP 20 (up to 8/0). Wood version available with interior sill and/or single glazed with EP. Prime exterior no longer standard, now optional. The enhancements and expanded product offerings to coincide with retirement of the Safe–T–Plus patio door.	Present
2002	Wood and Clad Trimline Patio Door	3/02 Stone White becomes a standard color. Arctic White transitions to a select color. 8/0 height decreases by 2 1/2 inches.	Present
2003	Wood and Clad Trimline Patio Door	11/03/03 Discontinued	Present

PART IDENTIFICATION

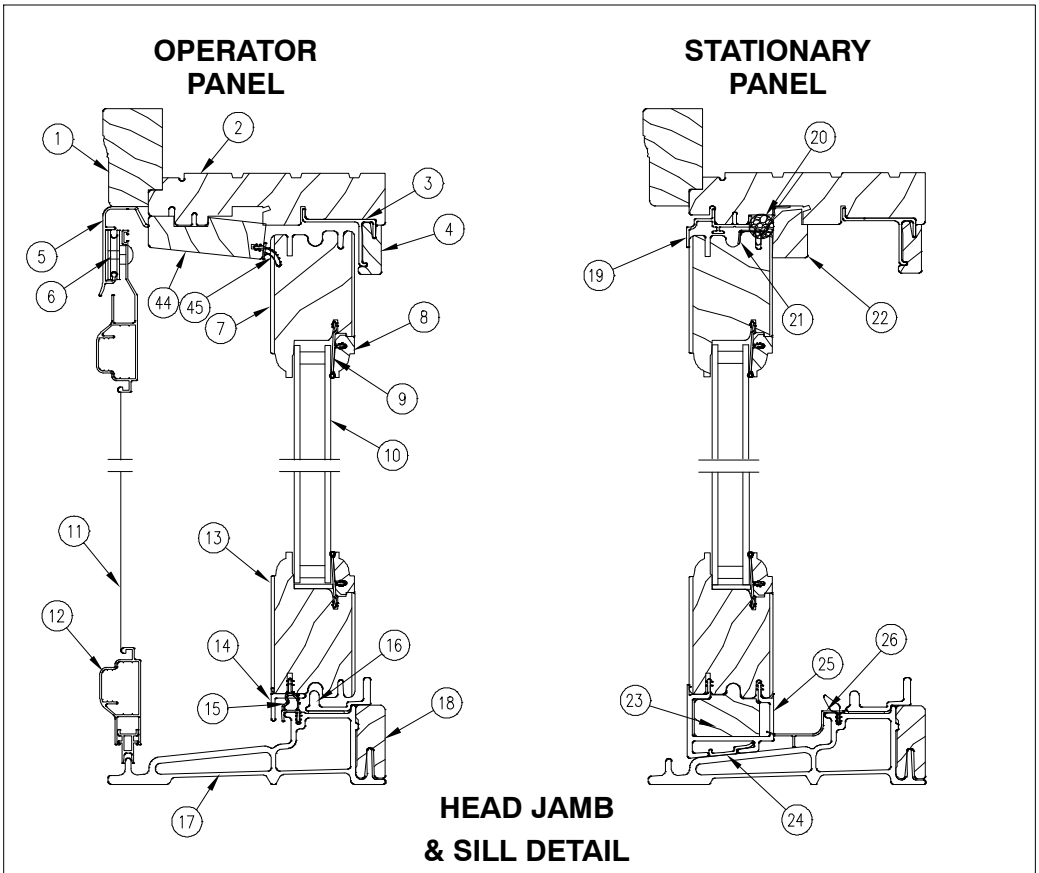

* Standard screen and screen track shown.

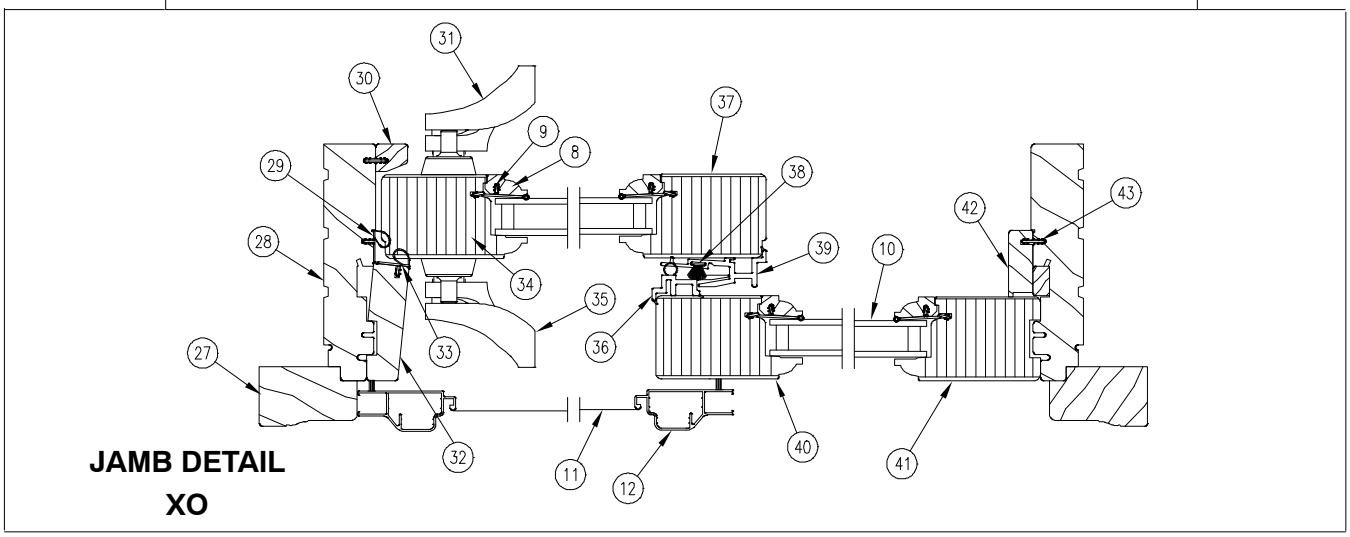

NOTE: Not to scale; specifications subject to change without notice.

1. Head Jamb Brick Mould Casing
2. Head Jamb
3. Panel Guide
4. Header Guide Cover
5. Screen Track
6. Screen Roller
7. Operator Top Rail
8. Glazing Cap
9. Glazing Bead
10. Insulated Glass
11. Screen Mesh
12. Screen Frame
13. Operator Bottom Rail
14. Panel Drip
15. Sill Weather Strip
16. Sill Roller Track
17. Ultrex Sill
18. Sill Liner
19. Stationary Head Jamb Retainer
20. Backer Rod
21. Stationary Panel Bracket
22. Stationary Panel Head Jamb Cover
23. Leveling Block Filler
24. Sill Stationary Panel Retainer
25. Leveling Block
26. Sill Condensation Cover
27. Side Jamb Brick Mould Casing
28. Side Jamb
29. Side Jamb Weather Strip
30. Interior Cover
31. Interior Handle Assembly
32. Jamb Parting Stop
33. Parting Stop Weather Strip
34. Operator Locking Style
35. Exterior Handle Assembly
36. Stationary Panel Interlock
37. Operator Meeting Style
38. Operator Panel Pile Weather Strip
39. Operator Panel Interlock
40. Stationary Meeting Stile
41. Stationary Jamb Stile
42. Stationary Jamb Cover
43. Connecting Barb
44. Head Jamb Parting Stop
45. Parting Stop Weather Strip

PART IDENTIFICATION

WOOD SLIDING PATIO DOOR STATIONARY

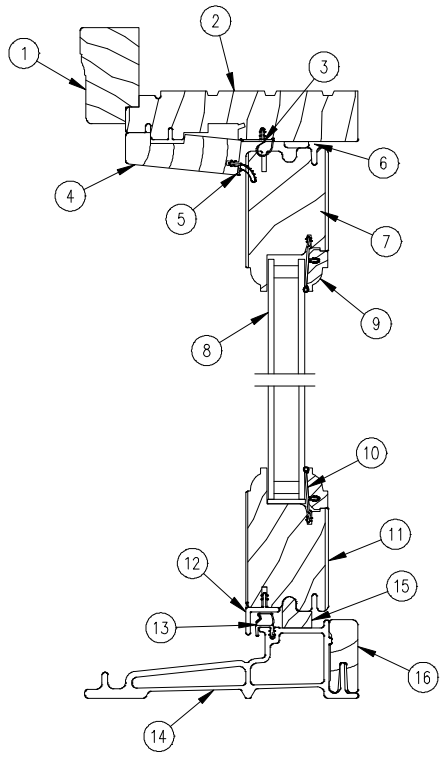

HEAD JAMB & SILL DETAIL

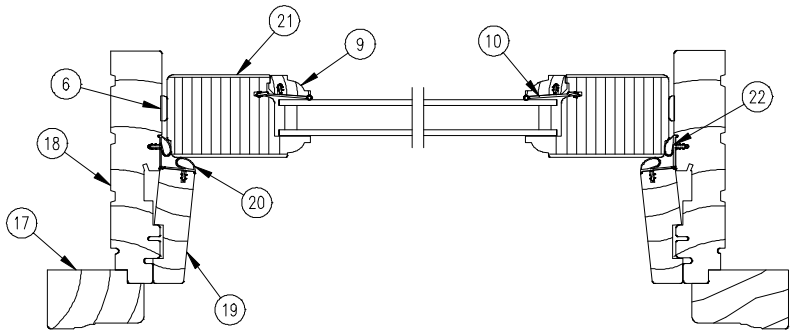

JAMB DETAIL

NOTE: Not to scale; specifications subject to change without notice.

1. Head Jamb Brick Mould Casing
2. Head Jamb
3. Head Jamb Weather Strip
4. Head Jamb Parting Stop
5. Parting Stop Weather Strip
6. Spacer Tack
7. Top Rail
8. Insulated Glass
9. Glazing Cap
10. Glazing Bead
11. Bottom Rail
12. Panel Drip
13. Sill Weather Strip
14. Ultrex Sill
15. Stationary Spacer
16. Sill Liner
17. Side Jamb Brick Mould Casing
18. Side Jamb
19. Side Jamb Parting Stop
20. Side Jamb Parting Stop Weather Strip
21. Stile
22. Side Jamb Weather Strip

PART IDENTIFICATION

WOOD SLIDING PATIO DOOR
3 PANEL XOO AND OXO

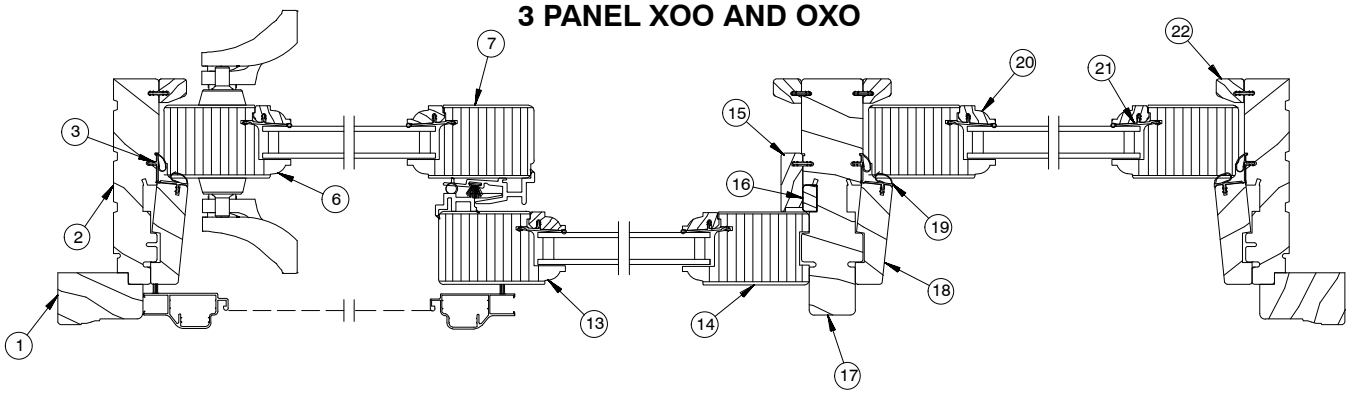

THREE PANEL JAMB DETAIL – XOO

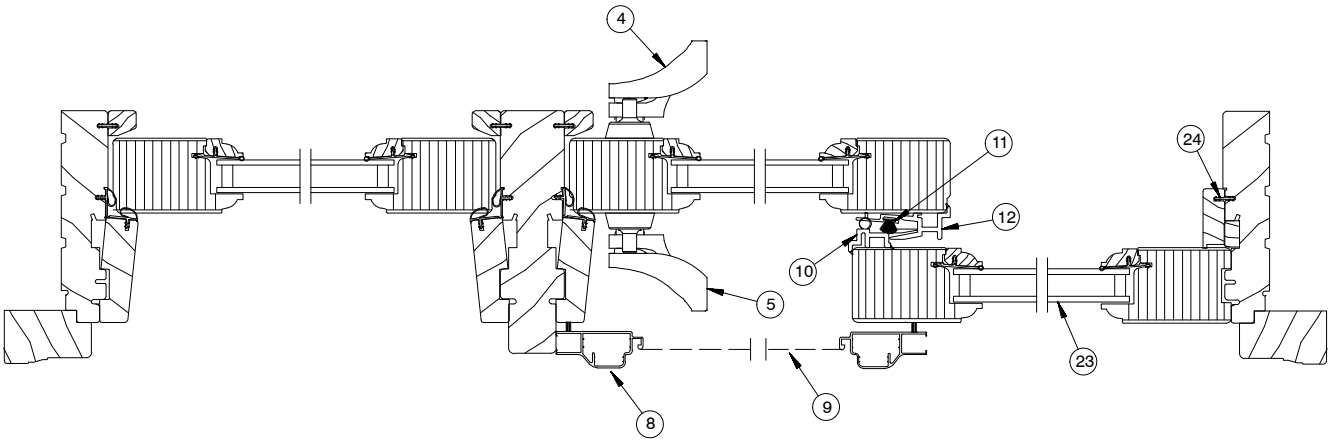

THREE PANEL JAMB DETAIL OXO

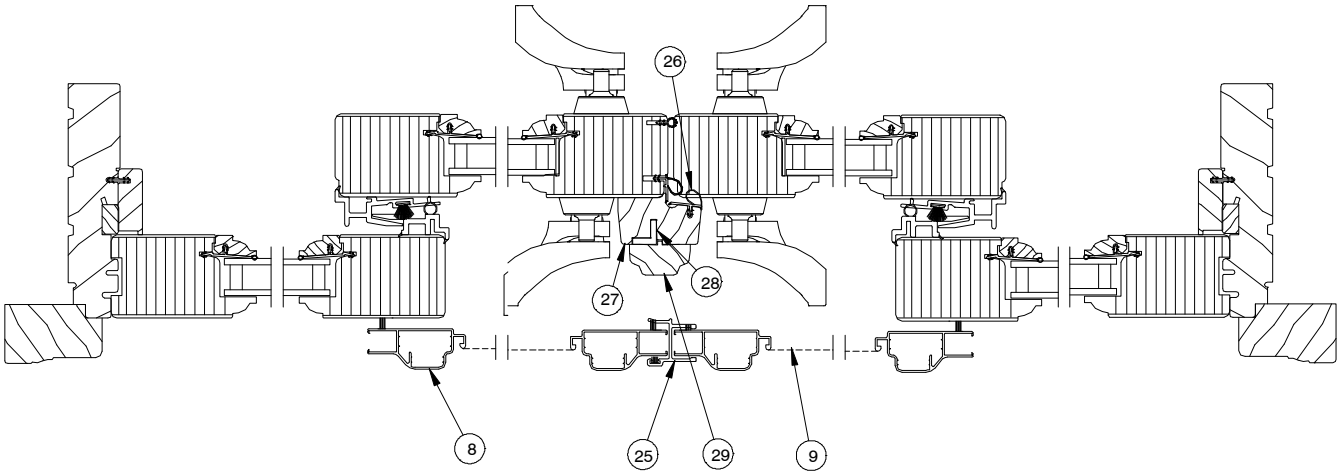

FOUR PANEL JAMB DETAIL OXXO

NOTE: Not to scale; specifications subject to change without notice.

1. Side Brick Mould Casing
2. Side Jamb
3. Side Jamb Weather Strip
4. Interior Handle Assembly
5. Exterior Handle Assembly
6. Operator Locking Stile
7. Operator Meeting Stile
8. Screen Frame
9. Screen Mesh
10. Stationary Panel Interlock
11. Operator Panel Pile Weather Strip
12. Operator Panel Interlock
13. Stationary Meeting Stile
14. Stationary Jamb Stile
15. Stationary Jamb Cover
16. Stationary Jamb Filler
17. Center Jamb
18. Jamb Parting Stop
19. Parting Stop Weather Strip
20. Glazing Cap
21. Glazing Bead
22. Jamb Liner
23. Insulated Glass
24. Connecting Barb
25. Screen Astragal
26. Mull Base Weather Strip
27. Mull Base
28. Mull Base Reinforcement
29. Astragal Cover

PART IDENTIFICATION

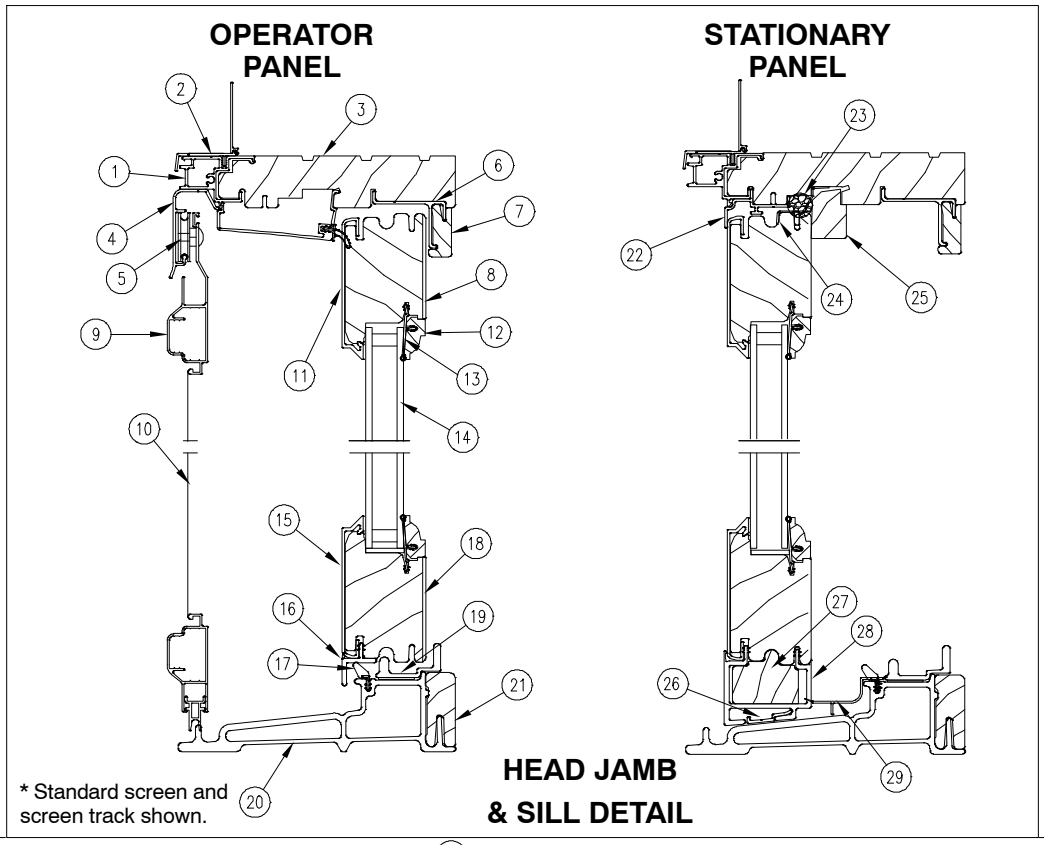

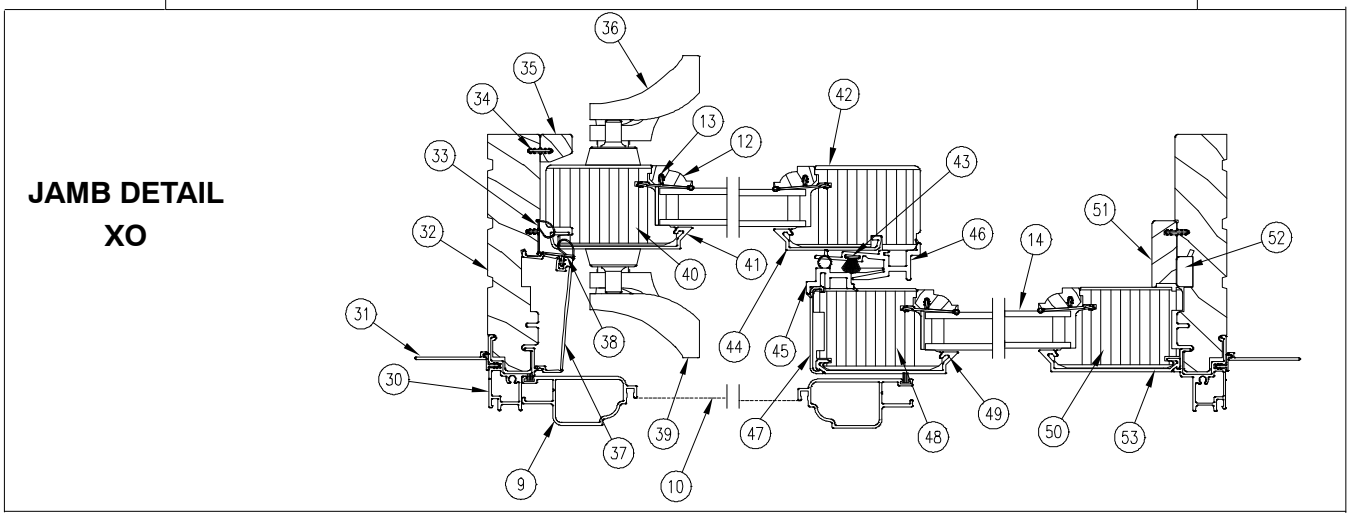

NOTE: Not to scale; specifications subject to change without notice.

1. Head Jamb Cladding
2. Head Jamb Nailing Fin/Drip Cap
3. Head Jamb
4. Screen Track
5. Screen Roller
6. Panel Guide
7. Header Guide Cover
8. Top Rail
9. Screen Frame
10. Screen Mesh
11. Operator Top Rail Cladding
12. Glazing Cap
13. Glazing Bead
14. Insulated Glass
15. Operator Bottom Rail Cladding
16. Panel Drip
17. Sill Weather Strip
18. Operator Bottom Rail
19. Sill Roller Track
20. Ultrex Sill
21. Sill Liner
22. Stationary Head Jamb Retainer
23. Backer Rod
24. Stationary Panel Bracket
25. Stationary Panel Head Jamb Cover
26. Sill Stationary Panel Retainer
27. Leveling Block Filler
28. Leveling Block
29. Sill Condensation Cover
30. Side Jamb Cladding
31. Side Jamb Nailing Fin
32. Side Jamb
33. Side Jamb Weather Strip
34. Connecting Barb
35. Interior Cover
36. Interior Handle Assembly
37. Jamb Parting Stop
38. Parting Stop Weather Strip
39. Exterior Handle Assembly
40. Operator Locking Stile
41. Operator Locking Stile Cladding
42. Operator Meeting Stile
43. Operator Panel Pile Weather Strip
44. Operator Meeting Stile Cladding
45. Stationary Panel Interlock
46. Operator Panel Interlock
47. Edge Cover
48. Stationary Meeting Stile
49. Stationary Meeting Stile Cladding
50. Stationary Jamb Stile
51. Stationary Jamb Cover
52. Stationary Jamb Filler
53. Stationary Jamb Stile Cladding

PART IDENTIFICATION

CLAD SLIDING PATIO DOOR STATIONARY

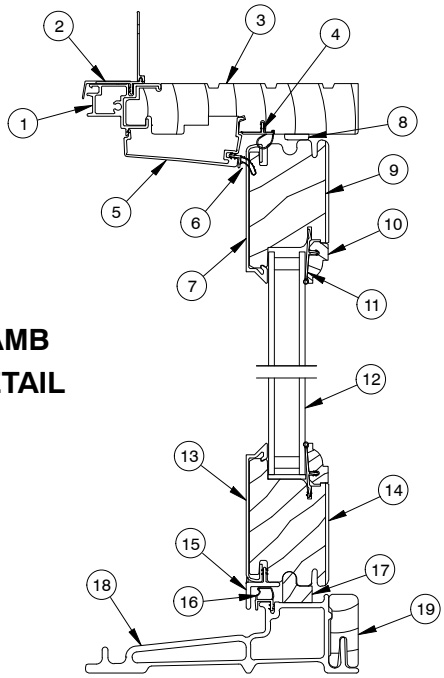

HEAD JAMB & SILL DETAIL

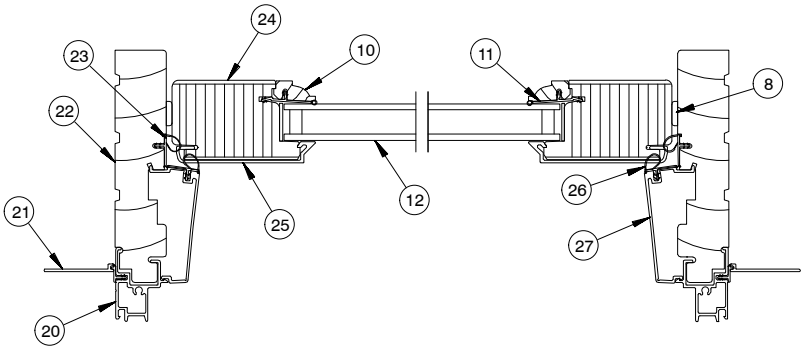

JAMB DETAIL STATIONARY

NOTE: Not to scale; specifications subject to change without notice.

1. Head Jamb Cladding
2. Head Jamb Nailing Fin/Drip Cap
3. Head Jamb
4. Head Jamb Weather Strip
5. Head Jamb Parting Stop
6. Parting Stop Weather Strip
7. Top Rail Cladding
8. Spacer Tack
9. Top Rail
10. Glazing Cap
11. Glazing Bead
12. Insulated Glass
13. Bottom Rail Cladding
14. Bottom Rail
15. Panel Drip
16. Sill Weather Strip
17. Stationary Spacer
18. Ultrex Sill
19. Sill Liner
20. Side Jamb Cladding
21. Side Jamb Nailing Fin
22. Side Jamb
23. Side Jamb Weather Strip
24. Stile
25. Stile Cladding
26. Parting Stop Weather Strip
27. Parting Stop

PART IDENTIFICATION

CLAD SLIDING PATIO DOOR
3 PANEL XOO AND OXO

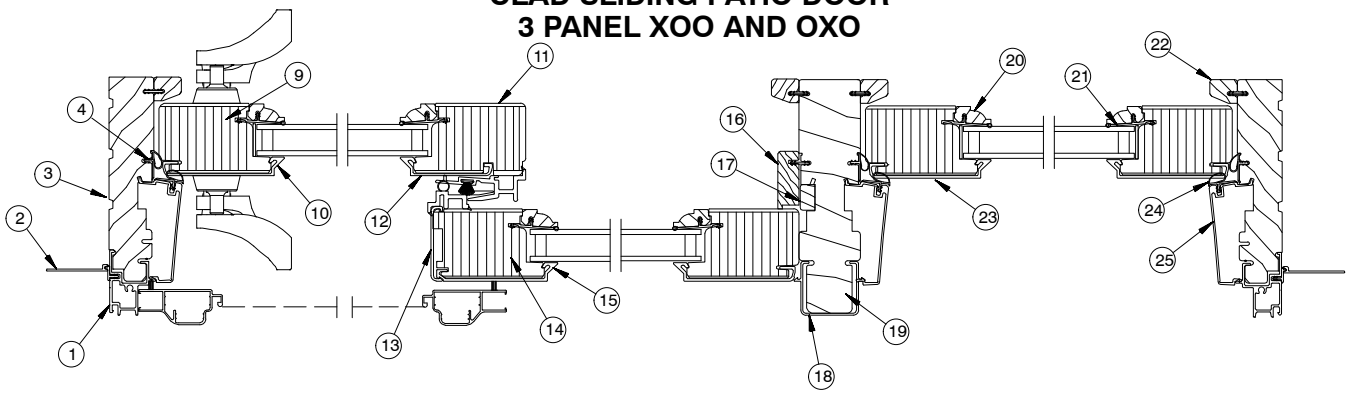

THREE PANEL JAMB DETAIL – XOO

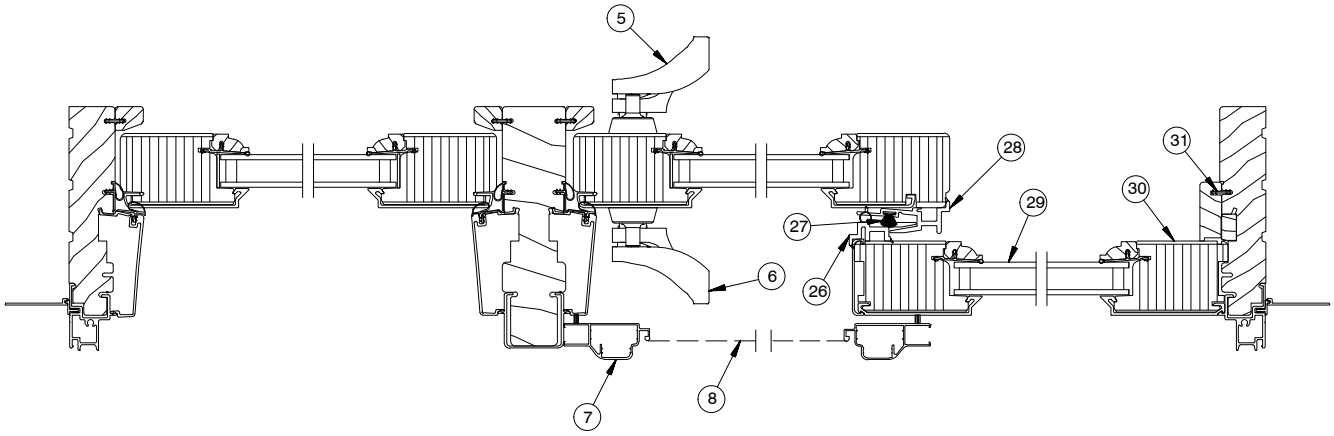

THREE PANEL JAMB DETAIL OXO

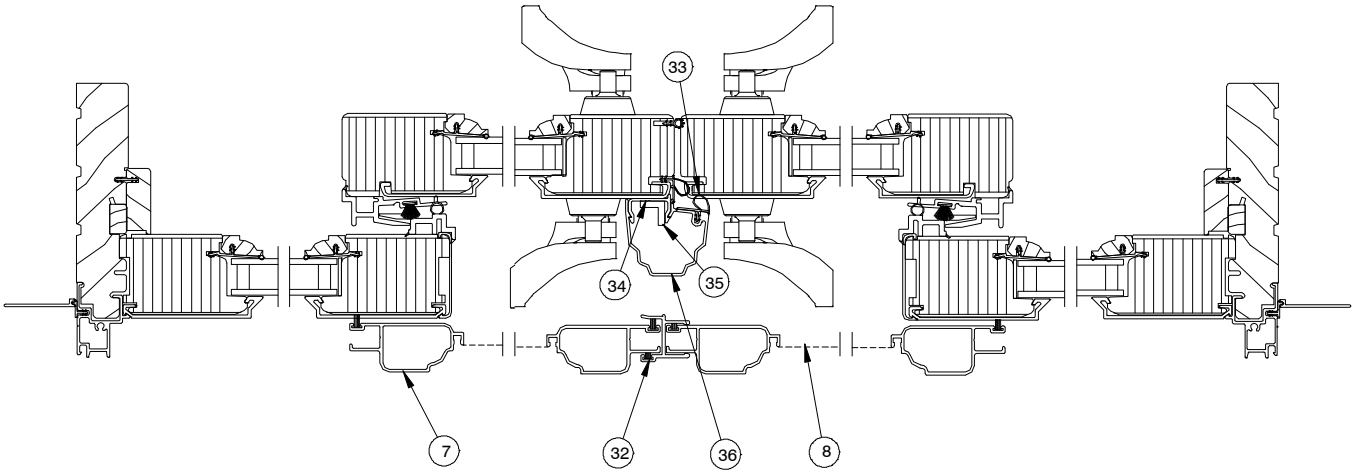

FOUR PANEL JAMB DETAIL OXXO

NOTE: Not to scale; specifications subject to change without notice.

1. Side Jamb Cladding
2. Side Jamb Nailing Fin
3. Side Jamb
4. Side Jamb Weather Strip
5. Interior Handle Assembly
6. Exterior Handle Assembly
7. Screen Frame
8. Screen Mesh
9. Operator Locking Stile
10. Operator Locking Stile Cladding
11. Operator Meeting Stile
12. Operator Meeting Stile Cladding
13. Edge Cover
14. Stationary Meeting Stile
15. Stationary Meeting Stile Cladding
16. Stationary Jamb Cover
17. Stationary Jamb Filler
18. Center Jamb Cladding
19. Center Jamb
20. Glazing Cap
21. Glazing Bead
22. Jamb Liner
23. Stationary Jamb Stile Cladding
24. Parting Stop Weather Strip
25. Parting Stop
26. Stationary Panel Interlock
27. Operator Pile Weather Strip
28. Operator Panel Interlock
29. Insulated Glass
30. Stationary Jamb Stile
31. Connecting Barb
32. Screen Astragal
33. Mull Base Weather Strip
34. Mull Base
35. Mull Base Reinforcement
36. Astragal Cladding

ILLUSTRATION *NOT TO SCALE*	DESCRIPTION	OPER./COLOR	PART NO.
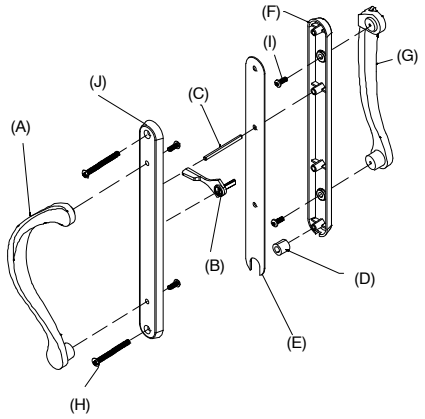	**Handle, Non–Keyed** *Includes:* *1 – Interior handle (A)* *1 – Lever handle (B)* *1 – Pin (C)* *1 – Bottom lug seal gasket (D)* *1 – Exterior escutcheon plate gasket (E)* *1 – Exterior escutcheon plate (F)* *1 – Exterior handle (G)* *2 – M5 x 50mm Phillips ovalhead machine screws (H)* *4 – M5 x 12mm screws (I)* *1 – Interior escutcheon plate (J)*	Satin Taupe Antique Brass Satin Chrome White Oil Rubbed Bronze ORBZ PVD Brass PVD Satin Nickel PVD Dark Bronze Bright Brass	10830085 10830090 10830088 10830084 10830047 10830113 10830092 10830110 10830117 NA
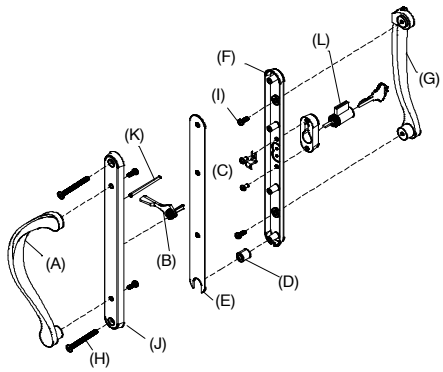	**Handle, Keyed** *Includes:* *1 – Interior handle (A)* *1 – Lever handle (B)* *1 – Stop clip and screws (C)* *1 – Bottom lug seal gasket (D)* *1 – Exterior escutcheon plate gasket (E)* *1 – Exterior escutcheon plate (F)* *1 – Exterior handle (G)* *2 – M5 x 50mm Phillips ovalhead machine screws (H)* *4 – M5 x 12mm screws (I)* *1 – Interior escutcheon plate (J)* *1 – Pin (K)* *1 – Keyed cylinder with housing, key and key base (L)*	Satin Taupe Antique Brass Satin Chrome White Oil Rubbed Bronze ORBZ PVD Brass PVD Satin Nickel PVD Dark Bronze Bright Brass	10830104 10830101 10830099 10830105 10830045 10830112 10830103 10830111 10830116 NA
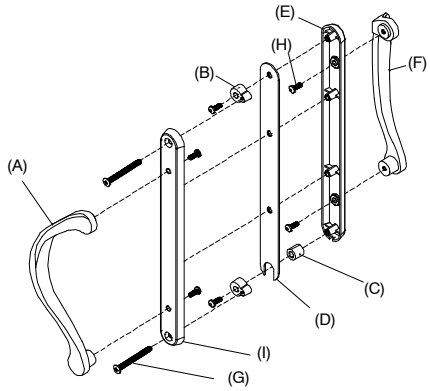	**Handle, Inactive** *Includes:* *1 – Interior handle (A)* *1 – Escutcheon adaptor (B)* *1 – Bottom lug seal gasket (C)* *1 – Exterior escutcheon plate gasket (D)* *1 – Exterior escutcheon plate (E)* *1 – Exterior handle (F)* *2 – M5 x 50mm Phillips ovalhead machine screws (H)* *4 – M5 x 12mm screws (I)* *1 – Interior escutcheon plate (I)*	Satin Taupe Antique Brass Satin Chrome White Oil Rubbed Bronze ORBZ PVD Brass PVD Satin Nickel PVD Dark Bronze	10830126 10830130 10830124 10830128 10830120 10830114 10830132 10830134 10830118
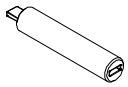	**Tail Piece Adaptor – Interior Shades**		11800172
	#10–32 x 1 1/2″ Machine Screw Extension– Interior Shades		11800170
	Lug seals		00142046
	Escutcheon Adaptor For Inactive Handle *Includes:* *1 – #10–32x7/16 hex drive panhead stainless steel screw (00143047)*	Zinc Diecast	00143048

ILLUSTRATION *NOT TO SCALE*	DESCRIPTION	OPER./COLOR	PART NO.
	#10–32 x 2 1/8″ *Phillips ovalhead machine screw*	Satin Taupe Antique Brass White Satin Chrome Oil Rubbed Bronze Dark Bronze Brass PVD Satin Nickel PVD	11800616 00143038 00143036 10840031 10840032 11800654 11800615 11801020
	Rubber Bumper	Beige Black	02101000 02101006
	Multi Point Lock (Anti–Slam) *Includes:* *1 – Multi Point lock* *2 – #10x1 1/2″ Phillips flathead wood screws (11800885)*	ZYD	02100937
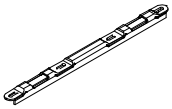	**Jamb Strike with Screws** *Includes:* *1 – Strike* *4 – #8x3″ Phillips panhead wood screws (11800831)*		10150034
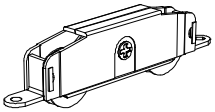	**Operator Panel Roller (Tandem-Adjustable)** Includes: *1 – Operator panel roller* *2 – #8x1″ Phillips flathead wood screws (ZYD 11800810) (SS 11800645)*	ZYD Stainless Steel	10820003 10820004
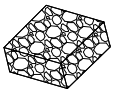	**Sill Drain Filter**		10500240
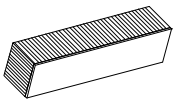	**Dust Block, Low Profile Sill**		10500296
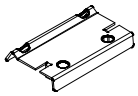	**Stationary Panel Head Jamb Bracket** *Includes:* *1 – Bracket* *4 – #8x1″ flat head screws (ZYD 11800810)*	Galvanized Steel	11860213
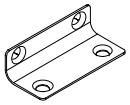	**Stationary Panel to Jamb Bracket** *Includes:* *1 – Stationary bracket* *2 – #7x 5/8″ screws (11800758)* *2–#7x1 1/4″* screws (*11807113)*	Galvanized Steel	11841001

ILLUSTRATION *NOT TO SCALE*	DESCRIPTION	OPER./COL-OR	PART NO.
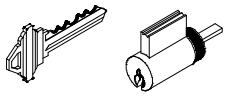	**Key Cylinder for Active Panel** For service replacement only.	Brass Face Chrome Face	10830201 10830200
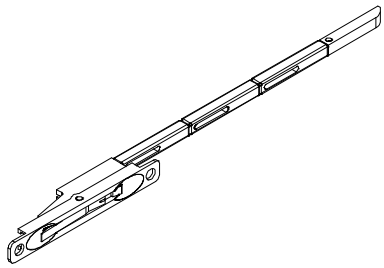	**Flushbolt Assembly, 68** For OXXO		11101755
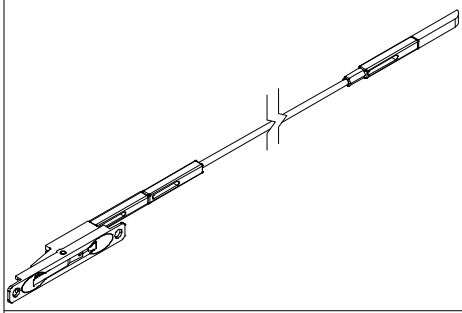	**Flushbolt Assembly, 80** For OXXO		11101756
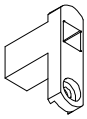	**End Bolt Guide** For OXXO		10815102
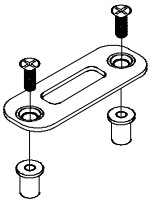	**Head Jamb Strike** Inactive Panel OXXO *Includes:* *1 – Strike* *2 – t–nut, #8–32 thread (05080250)* *2–#8–32x3/4"* machine screw (11800730)	ZYD	10148195
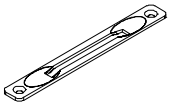	**Modified Flushbolt Trim Cover** For OXXO	AL	11101759
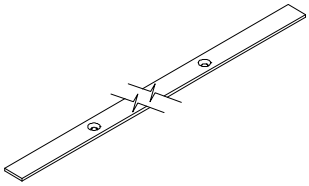	**Flushbolt Trim Cover Extension** For OXXO 66R and 68 80	 AL AL	 11101757 11101758
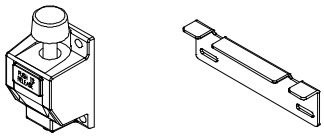	**Auxiliary Foot Bolt, Package**	BG	(10150035) NA Replace with Foot Bolt Kit

Roller Adjustment Plug

Finish	Wood Species		
	Pine	Cherry	Mahogany
Bare	01060619	–	–
White (PIF)	39200619	–	–
Clear	31660619	11100916	11100923
Wheat	11100910	11100917	11100924
Honey	11100911	11100918	11100925
Hazelnut	11100912	11100919	11100926
Leather	11100913	11100920	11100927
Espresso	11100914	11100921	11100928
Cabernet	11100915	11100922	11100929

NOTE: Douglas fir uses BA plugs and Cedro Macho uses Mahogany plugs.

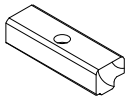

Bumper Block, Head Jamb or Sill

Finish	Wood Species
	Pine
Bare	75151605
Prime	75151808
White (PIF)	75151807
Non Finger–jointed	75151800
Wheat	75151801
Honey	75151802
Hazelnut	75151803
Leather	75151804
Espresso	75151805
Cabernet	75151806

SLIDING DOOR AUXILIARY FOOT BOLT KIT

Includes:

1– Foot Bolt Assembly
(Foot Bolt (a), Lock Plate Assembly (c), #8 x 2 3/4″ Screws (d), Installation Template (b), and Installation Instructions)

1 – Bumper Stop (e)

1 – #8 x 1 1/2″ Screw (f)

1 – Roller Adjustment Plug (g)

NOTE: Not available on low–profile sill

COLOR/CONFIGURATION

Species	White / XO	White / OX	Beige / XO	Beige / OX	Bronze / XO	Bronze / OX
Pine	11101760	18900611	11101761	18900612	11101762	18900613
Cherry	18900614	18900617	18900615	18900618	18900616	18900619
Vertical Grain Douglas Fir	18900620	18900623	18900621	18900624	18900622	18900625
Mix Grain Douglas Fir	18900638	18900641	18900639	18900642	18900640	18900643
Oak	18900632	18900635	18900633	18900636	18900634	18900637
Mahogany/Cedro Macho	18900626	18900629	18900627	18900630	18900628	18900631

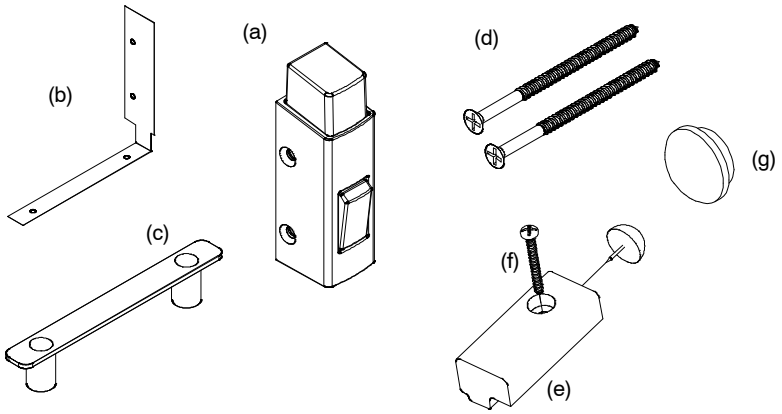

REPLACEMENT WOOD PARTS

CURRENT REPLACEMENT WOOD PARTS

	Clad	Wood
Stationary Panel Top Spacer*	W8452*	W8452*
Stationary Panel Bottom Spacer	W8643	W8643
Stationary Jamb Cover	W7535	W7535
Screen Track Filler	– – –	W5221
Leveling Block Filler	W8270	W8270
Jamb Liner	W7536	W7536
Center Jamb Cover	W7534	W7534
Sill Liner	W2528	W2528
Panel Guide	W8040	W8040
Head Jamb and Jamb Parting Stop	– – –	W6535
Stationary Panel Head Jamb Cover	W7504	– – –
Mull Casing Base	– – –	W9019
Astragal Cover	– – –	W7554
Oak Sill Liner, Low Profile Sill	W10428	W10428
Bumper Stop Block, Low Profile Sill	W10302	W10302
NOTE: Replacement wood parts are supplied with connecting barb (where applicable).		

* Replaced with stationary bracket (11860212).

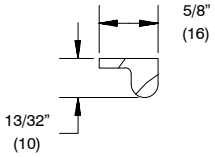

W8452 – Stationary Panel Top Spacer*

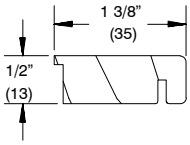

W7535 –Stationary Jamb Cover

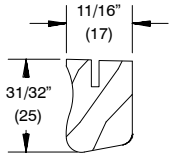

W5221 – Screen Track Filler – Wood

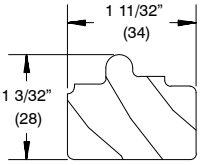

W8270 – Leveling Block Filler

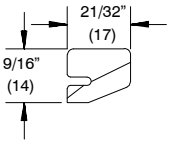

W7536 – Jamb Liner

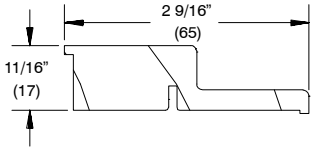

W7534 – Center Jamb Cover

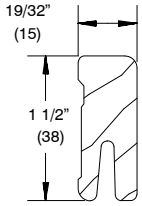

W2528 – Sill Liner (oak)

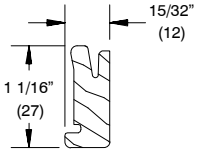

W8040 – Panel Guide

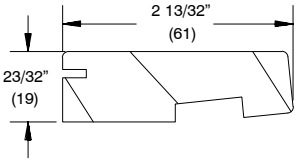

W6535 – Head Jamb and Jamb Parting Stop

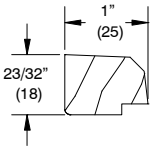

W7504 – Stationary Panel Head Jamb Cover

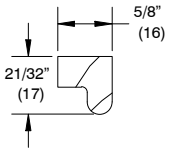

W8643 – Stationary Panel Bottom Spacer

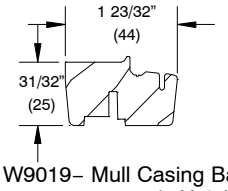

W9019– Mull Casing Base
71520469 – 6/8 Height
71520481 – 8/0 Height

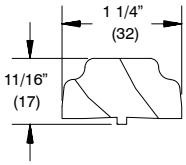

W7554 – Astragal Cover

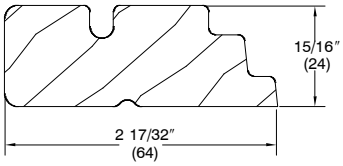

W10302 – Bumper Stop Block, Low Profile Sill
71271003

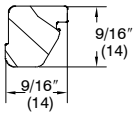

W10428 – Oak Sill Liner, Low Profile Sill

TO ORDER REPLACEMENT WOOD PARTS

When ordering replacement wood parts specify:

1. profile number;
2. rough opening;
3. handing;
4. length;
5. finish.

ORDERING REPLACEMENT VINYL, ALUMINUM OR FIBERGLASS PARTS FOR THE SLIDING PATIO DOOR

	Clad	Wood
Roller Track – Beige or Black	V1745	– – –
Leveling Block – Beige or Black	V1755	V1755
Panel Drip – Beige or Black	V1012	V1012
Ultimate Screen Guide Bar – Beige	V805	V805
Condensation Cover – Beige or Black	V1131	– – –
Head Jamb, Jamb Parting Stop	A836	– – –
Ultimate Screen Track	A777	A777
Ultrex Sill – Beige or Bronze	F256	F256
Header Panel Guide Fastener	A1014	A1014
Stationary Meeting Stile Clad Edge Cover	A778	A778
Standard Screen Track	A1070	A1070
Astragal Base	A771	– – –
Base Reinforcement	A1409	– – –
Sill, Low Profile	F1223	F1223
Roller Track, Low Profile Sill – Beige or Black	V1846	V1846
Stat Panel Seal, Low Profile Sill – Beige or Black	V1865	V1865
Weather Strip, Interior, Low Profile Sill – Beige or Black	V1793	V1793
Weather Strip, Exterior, Low Profile Sill – Beige or Bronze	V1138	V1138
Panel Drip, Low Profile Sill – Beige or Black	V1823	V1823

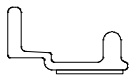
V1745 – Roller Track

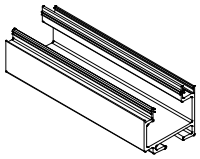
V1755 – Leveling Block

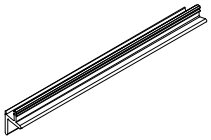
V1012 – Panel Drip

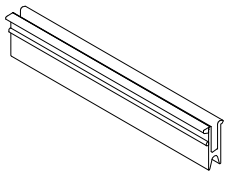
V805 – Ultimate Screen Guide Bar

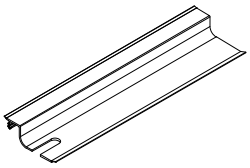
V1131 – Condensation Cover

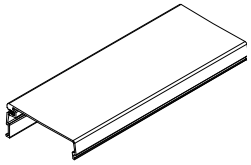
A836 – Head Jamb, Jamb Parting Stop

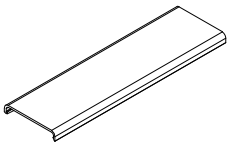
A778 – Stationary Meeting Stile Clad Edge Cover

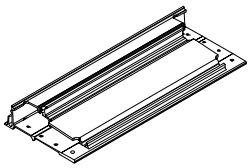
F256 – Ultrex Sill

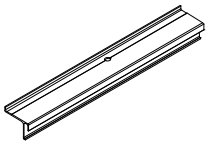
A1014 – Header Panel Guide Fastener

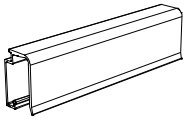
A777 – Ultimate Screen Track

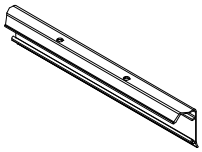
A1070 – Standard Screen Track

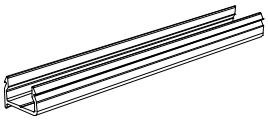
A771 – Astragal Base

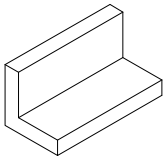
A1409 – Base Reinforcement
18620090 – 6/8 Height
18620073 – 8/0 Height

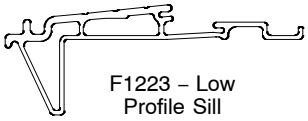
F1223 – Low Profile Sill

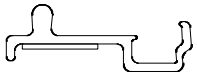
V1846 – Roller Track, Low Profile Sill

TO ORDER REPLACEMENT PARTS

When ordering replacement parts specify:

1. profile number;
2. rough opening;
3. length;
4. handing;
5. finish.

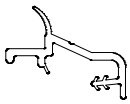
V1865 – Stationary Panel Seal, Low Profile Sill

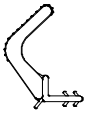
V1793 – Weather Strip, Low Profile Sill Interior

V1138 – Weather Strip, Low Profile Sill Exterior

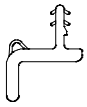
V1823 – Panel Drip, Low Profile Sill

ORDERING REPLACEMENT PANELS FOR THE SLIDING PATIO DOOR

To order replacement panels specify:

1. OM of panel;
2. active or stationary;
3. handing;
4. glazing;
5. Finish
6. Interior Wood Glazing Bead option (Ovolo or Square).

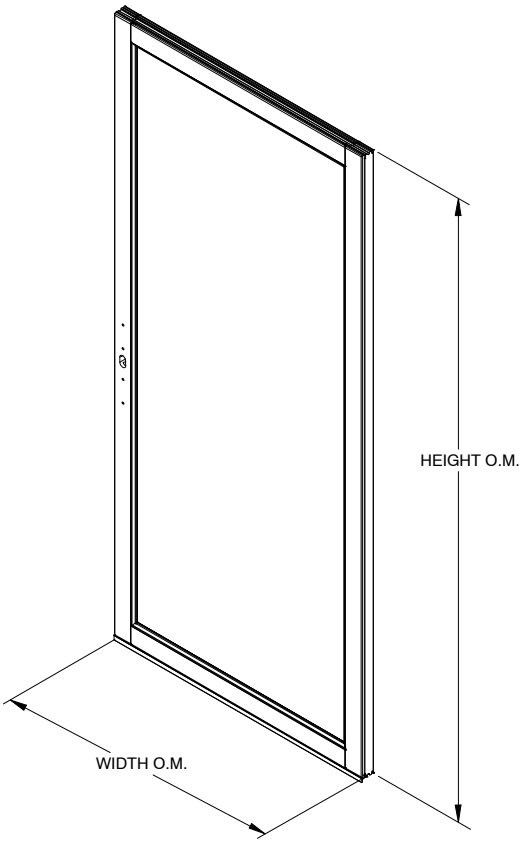

Wood Active Panel
Exterior View

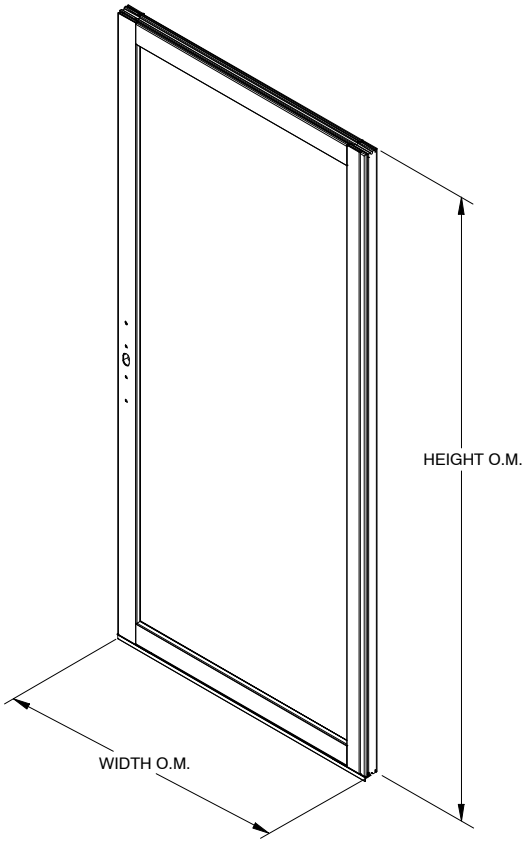

Clad Active Panel
Exterior View

NOTE: Active panels include meeting stile weather strip, panel drip and interlock.

Stationary panels include a stationary top filler, leveling block and leveling block filler.

SLIDING PATIO DOOR WEATHER STRIP

When ordering replacement weather strip specify:

1. quantity;
2. length;
3. part number;
4. description.

ILLUSTRATION *NOT TO SCALE*	DESCRIPTION	LENGTH	OPER./COLOR	PART NUMBER
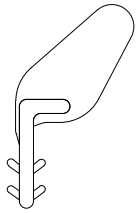	**Sill Weather Strip** V1138	Specify Length	BG BZ	15910499 15910799
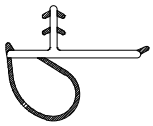	**Bulb Weather Strip, Jambs, Astragal and Transom** V796	95 9/16″ 189 23/32″	BG BK	15173080 15173398
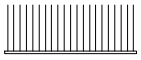	**Stationary Panel Cover Pile Dust Block** Adhesive backed 2 1/4″ x 1 3/8″ x 1/2″		GY	15600004
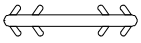	**Connecting Barb** V803 NOTE: Color may vary depending on current stock.	Specify Length		15812999
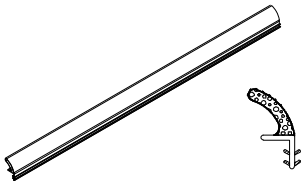	**Head Jamb, Parting Stop** V1194	144″ 150″	BG BK	17003599 15977999
	Bulb Weather Strip V1297 For OXXO unit	Specify Length	BG BK	15351499 15351500

WEATHER STRIP

ILLUSTRATION *NOT TO SCALE*	DESCRIPTION	LENGTH	OPER./ COLOR	PART NUMBER
	Dust Block, Part Stop 1 3/8″ x 3/8″x 1/2″		GY	15600010
	Dust Block, Astragal or Panel 1 3/8″ x 1/4″x 3/8″			10500049
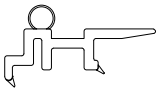	**Interlock, Stationary Panel** V715			
	66R ht.	76 5/8″	BG	15211476
	66R ht.	76 5/8″	BK	15211466
	68 ht.	79 1/8″	BG	15211468
	68 ht.	79 1/8″	BK	15211469
	80 ht.	92 5/8″	BG	15211480
	80 ht.	92 5/8″	BK	15211481
	Lineal	110 5/8″	BG	15211496
	Lineal	110 5/8″	BK	15211497
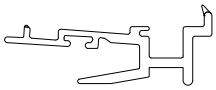	**Interlock, Operating Panel** V714			
	66R ht.	75 19/32″	BG	15211575
	66R ht.	75 19/32″	BK	15211666
	68 ht.	78 3/32″	BG	15211568
	68 ht.	78 3/32″	BK	15211569
	80 ht.	91 19/32″	BG	15211580
	80 ht.	91 19/32″	BK	15211581
	Lineal	109 19/32″	BG	15211596
	Lineal	109 19/32″	BK	15211597
	Inactive Panel Stile Center V780	150″ 150″	BG BK	15174099 15174098
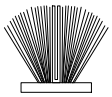	**Pile Weather strip, Check Rail** Operating Interlock	LF	BG	11107533

OBSOLETE – PARTS

ILLUSTRATION *NOT TO SCALE*	DESCRIPTION	OPER./COLOR	PART NO.
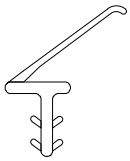	**Head Jamb, Parting Stop, Astragal** V795 79 5/16″ 79 5/16″	 BG BK	 15646068 15646069
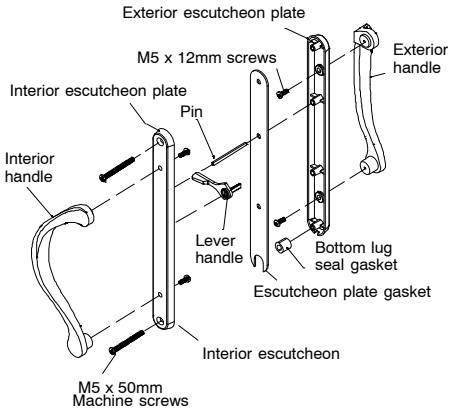	**Handle, Non–Keyed**	Polished Chrome	10830087
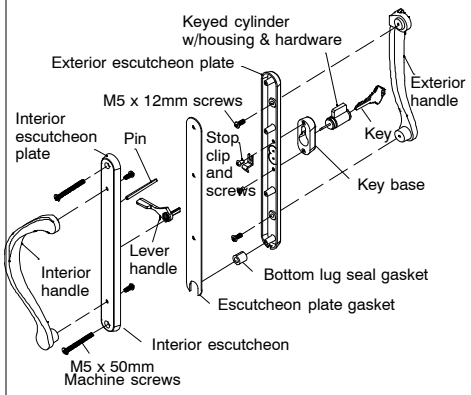	**Handle, Keyed**	Polished Chrome	10830098
	#10–32x2″ Phillips ovalhead machine screw	Polished Chrome	NA
	Stop clip with screws NA as individual part – 02–2011		NA

OBSOLETE – WEATHER STRIP

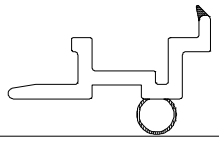	**Interlock, Stationary Panel** V715 Color: Beige	160″	15211099
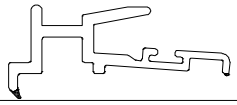	**Interlock, Operating Panel** V714 Color: Beige	109 1/2″	15211596

OBSOLETE TRIMLINE PATIO DOOR

When ordering replacement parts specify:

1. type of unit;
2. part number;
3. description.

ILLUSTRATION *NOT TO SCALE*	DESCRIPTION	OPER./COLOR	PART NO.
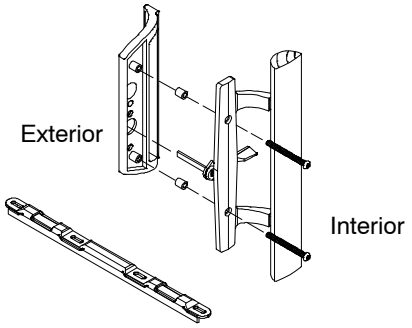	**Handle Package** *1 – Interior handle with wooden insert and turn lever* *1 – Exterior handle* *2 – Handle gaskets* *2 – #10-24x2″ Phillips panhead machine screws* *1 – Strike* *4 – 8x2 1/2″ panhead wood screws*	BG	10150032
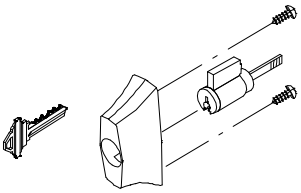	**Key Lock with Housing** Schlage “C” Keyway *Includes:* *1 – Keyed cylinder with housing* *2 – Keys* *2 – #8x 3/8″ Phillips trusshead machine screws*	BG	10150010
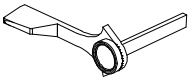	**Turn Lever**	BL	10140012
	Handle Gasket		NA
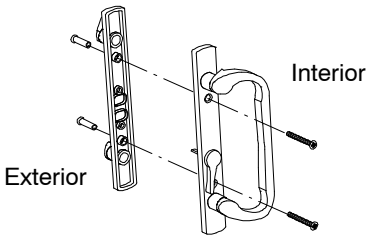	**Handle Assembly** *Includes:* *1 – Interior handle with escutcheon plate and turn lever* *1 – Exterior handle with escutcheon plate* *2 – #10-20x 1 3/4″ Phillips ovalhead machine screws with cap nuts*	BS	05590100
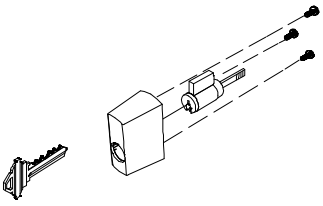	**Key Lock with Housing** Schlage “C” keyway for brass handle *Includes:* *1 – Keyed cylinder with housing* *2 – Keys* *3 – #8x3/8″ Phillips trusshead machine screws*	BS	02100563
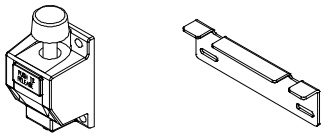	**Auxiliary Foot Bolt, Package** *Includes:* *1 – Foot bolt lock* *4 – #8x1″ Beige panhead Phillips wood screws.* *1 – Strike* *2 – #8x3/4″ Beige panhead Phillips self tapping screws.*	BG	10150035
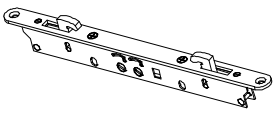	**Mortise Lock** *Includes:* *1 – Mortise lock* *2 – #8x1 1/2″ Phillips flathead wood screws.*	ZYD	10150030

OBSOLETE – PARTS

ILLUSTRATION *NOT TO SCALE*	DESCRIPTION	OPER./COLOR	PART NO.
	Jamb Strike with Screws *Includes:* *1 – Strike* *4 – #8x2 1/2″ Phillips panhead wood screws.*	ZYD	10150031
	Straight Angle Bracket (Top) MISC 014 *Includes:* *1 – Straight angle bracket* *2 – #7x1 1/4″ Phillips flathead wood screws (panel)* *2 – #8x1″ Phillips flathead wood screws (head jamb)*	BG	11100101
Small *Large*	**Operator Panel Roller (Tandem-Adjustable)** *Includes:* *1 – Operator panel roller* *2 – #8x1″ Phillips flathead wood screws*	Small Small SS Large Large SS	10820000 05550411 NA(10820001) NA(10820002)
	Roller Adjustment Plug	BG	11170001
	Door Stop, Head Jamb		NA
	Rubber Bumper	BG	02101000
	Sill Block MISC 2238 19/64″ x 5/16″ x 2″ *Includes:* *1 – Sill block* *1 – #8x7/8″ Phillips panhead screw*	BG	11109100
	Jamb Gasket, Sill Weather Strip/Jamb 1/8″ x 5/8″ x 2″	BK	NA
	Door Stop, Sill V807	BG	18051303
	Lexan Sill with Wood Core Used between 1988 – 1991	BN	NA
	Sill Cover and Ultrex Sill Core Assembly V790/F250 Used between 1991 – 1995	BG	Check availability
	Roller Track V769 Used between 1995 – 5/98.	BG	Check availability

OBSOLETE – PARTS

ILLUSTRATION *NOT TO SCALE*	DESCRIPTION	OPER./ COLOR	PART NO.
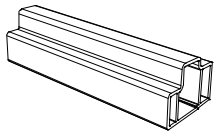	**Leveling Block** V858 Used between 1991 – 1995. Has been replaced with V766 – Leveling Block.	BG	Check availability
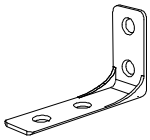	**Straight Angle Bracket (Top)** MISC 014 Has been replaced with Straight Angle Bracket 11100101 (beige)	ZYD	NA Replace with 11100101 BG
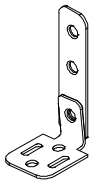	**Adjustable Angle Bracket (Bottom)** *Includes:* *1 – Adjustable angle bracket* *2 – #7x1 1/4" Phillips flathead wood screws (panel)* *2 – #7x5/8" Phillips flathead wood screws (sill)*	BG	11100204
	Sill Stationary Panel Bracket MISC 0686 *Includes:* *1 – Sill stationary panel bracket* *1 – #7x1 1/4" Phillips flathead wood screw (panel)* *1 – #8-32x3/4" Phillips flathead machine screw (sill)*	BG	11100357
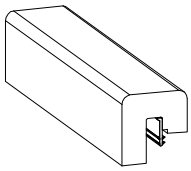	**Door Stop, Sill** V807 Used between 1991 – 1995 with V790/F250 Sill Cover and Ultrex Sill Core assembly. Current 5/98 to Present	BG	18051303
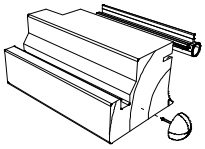	**Door Stop Assembly, Sill** MISC 1722 Used 1995 through 5/98		NA
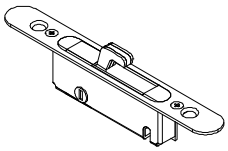	**Mortise Lock** Used between 1991 – 8/98 *Includes:* *1 – Mortise lock* *2 – #8x1 1/2" Phillips flathead wood screws.*	ZYD	02100960
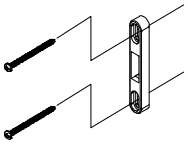	**Jamb Strike with Screws** Used between 1991 – 8/98 *Includes:* *1 – Strike* *2 – #8x2 1/2" Phillips flathead wood screws.*	ZYD	02100961

OBSOLETE REPLACEMENT WOOD PARTS

	Clad	Wood
Stationary Panel Filler	W7286	W7286
Stationary Panel Top Filler	W7270	W7270
Sill Liner	W7532	W7532
Leveling Block Filler	W7508	W7508
Head Jamb and Jamb Parting Stop	W7280	W7280
Head Jamb Liner and Stationary Jamb Liner	W7274	W7274
Panel Guide	W7278	W7278
Panel Opening Filler	– – –	W7282
Operating Panel Track	W7279	W7279
Jamb Liner	W7276	W7276
Stationary Panel Liner	W7296	W7296
Stationary Quarter Round Stop	W7003	W7003
Exterior Mull Casing	– – –	W1097
Interior Mull Casing	W1098	W1098
Center Jamb	– – –	W7292
Sill Liner	W7507	W7507

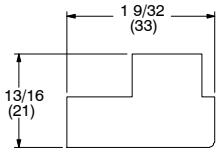

W7286 – Stationary Panel Filler (OOX or XOO)

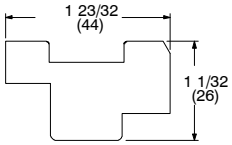

W7270 – Stationary Panel Top Filler

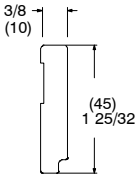

W7532 – Sill Liner (Oak)

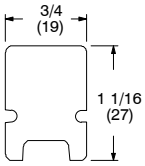

W7508 –Leveling Block Filler

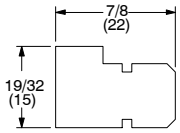

W7280 – Head Jamb and Jamb Parting Stop

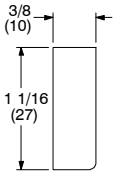

W7274 – Head Jamb Liner and Stationary Jamb Liner

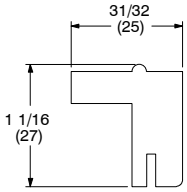

W7278 – Panel Guide

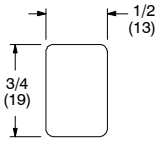

W7282 – Panel Opening Filler – Wood

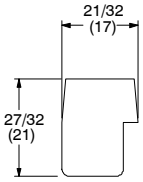

W7279 – Operating Panel Track

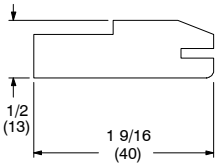

W7276 – Jamb Liner

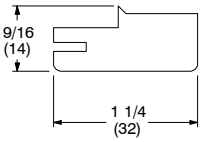

W7296 – Stationary Panel Liner (OXO)

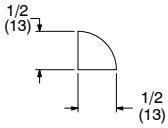

W7003 – Stationary Quarter Round Stop (O)

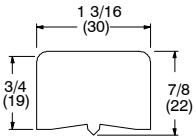

W1097 – Exterior Mull Casing (OOX or XOO)

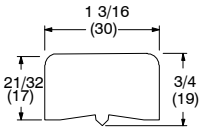

W1098 – Interior Mull Casing (OOX or XOO)

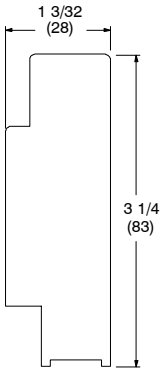

W7292 – Center Jamb (OXO)

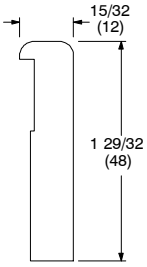

W7507 – Obsolete Sill Liner (Oak)

TO ORDER REPLACEMENT WOOD PARTS

When ordering replacement wood parts specify:

1. profile number;
2. rough opening;
3. handing;
4. length;
5. finish.

OBSOLETE REPLACEMENT PARTS

OBSOLETE REPLACEMENT VINYL, FIBERGLASS OR ALUMINUM PARTS

	Clad	Wood
Screen Channel – Brown	– – –	V365
Screen Channel – White	– – –	V310*
Ultrex Sill – Beige	F254	F254
Panel Drip – Beige	V800	V800
Leveling Block – Beige	V766	V766
Roller Track – Beige	V786	V786
Roller Track Cover – Beige	V830	V830
Head Jamb and Jamb Filler	A802	– – –
Mullion Cap	A808	– – –
Mullion Cap Base	A809	– – –
Center Jamb (with filler block)	A810	– – –

* V007 is no longer available. Substitute V310 white, Part number 11104090, length 140 1/16″

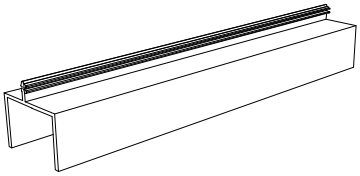

Screen Channel
V365 Brown
V007* White (no longer available)

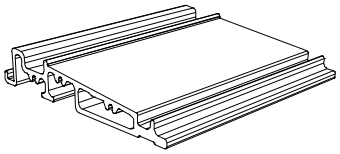

F254 – Ultrex Sill

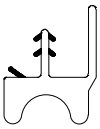

V800 – Panel Drip

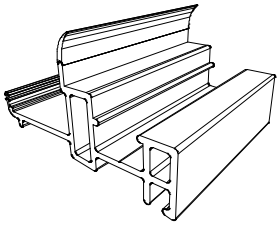

V766 – Leveling Block

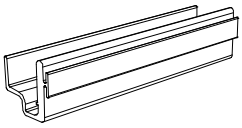

V786 – Roller Track

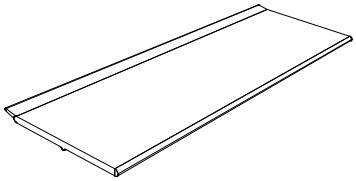

V830 – Roller Track Cover

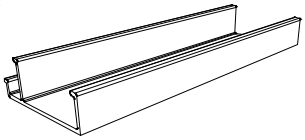

A802 – Head Jamb and Jamb Filler

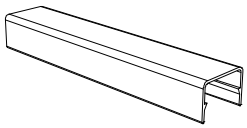

A808 – Mullion Cap

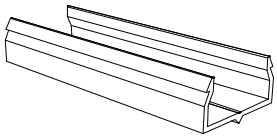

A809 – Mullion Cap Base

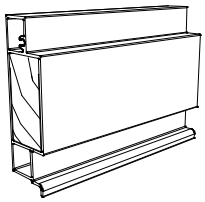

A810 – Center Jamb (with filler block)

TO ORDER REPLACEMENT PARTS

When ordering replacement parts specify:

1. profile number;
   a. wood or clad door
2. rough opening;
3. length;
4. handing;
5. finish.

OBSOLETE WEATHER STRIP

OBSOLETE TRIMLINE PATIO DOOR WEATHER STRIP

When ordering replacement weather strip specify:

1. quantity;
2. color;
3. part number.

ILLUSTRATION *NOT TO SCALE*	DESCRIPTION	LENGTH	PART NUMBER
	Leaf Weather Strip, Panel Guide and Jamb Liner V245 Color: Beige	150″	15189999
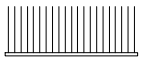	**Pile Weather Strip, Head Jamb** Adhesive backed Color: Gray 11/16″ x 31/64″ x 2 1/4″		15600001
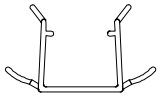	**Parting Stop Weather Strip, Stationary Jamb, Head Jamb** V735 Color: Beige	70 15/32″ 79 17/32″ 142 31/32″ 150″	N/A N/A N/A 15619700
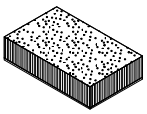	**Dust Block** MISC 443 Color: Gray		15600004
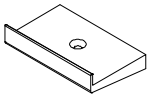	**Dust Block Support** V956		(15600007) NA
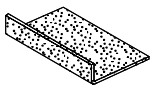	**Dust Block Support Gasket**		15600006
	Pile Weather Strip, Operator Panel Interlock 17/64″ x 21/64″ Color: Beige	By Lineal Foot	11107533
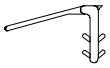	**Sill Weather Strip** V791 Color: Beige	75 5/16″ 99 5/16″	N/A 15641160
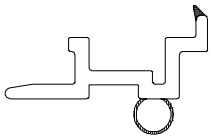	**Interlock, Stationary Panel** V715 Color: Beige 8–0 ht.	160″	15211099
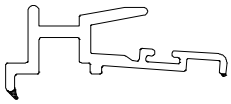	**Interlock, Operating Panel** V714 Color: Beige 8–0 ht.	109 1/2″	15211596

OBSOLETE – WEATHER STRIP

ILLUSTRATION *NOT TO SCALE*	DESCRIPTION	LENGTH	PART NUMBER
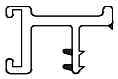	**Bottom Seal Weather Strip** V746 Used between 1988 – 1991		NA Replace with V760
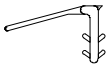	**Sill Weather Strip** V791 Used between 1991 – 1995 and 5/98 to Present Color: Beige	99 5/16″	15641160
	Interlock and Bottom Seal Pile Weather Strip Used between 1988 – 1991		NA
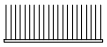	**Sill Dust Block Pile Weather Strip** Used between 1988 – 1991		NA
	Sill Foam Block Weather Strip Used between 1988 – 1991		NA
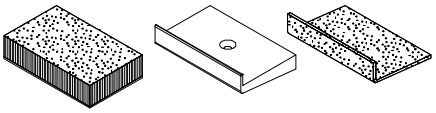	**Dust Block Assembly** MISC 2252 Used between 1991 – 1995.		NA
	Foam Interlock Weather Strip V750 Used between 1991 – 1995 Color: Beige		NA
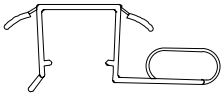	**Parting Stop Weather Strip, Operating Jamb** V777 Color: Beige Used before 1/98		NA
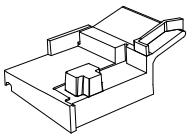	**Hydroseal** MISC 2252 Color: Black Used between 1995 – 1/98		NA
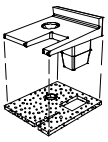	**End Cap (with gasket)** MISC 2245 Color: Beige Used between1995 – 1/98		NA

OBSOLETE – WEATHER STRIP

ILLUSTRATION *NOT TO SCALE*	DESCRIPTION	LENGTH	PART NUMBER
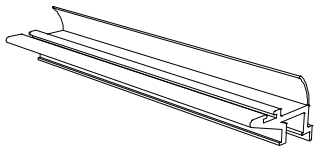	**Interlock, Stationary Panel** V747 Color: Beige Wood only Used between 1988 –1995 and 1996 – 1/98		NA
	Interlock, Stationary Panel V472 Color: Beige Clad only Used between 1990 –1995 and 1996 – 1/98		NA
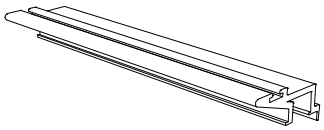	**Interlock, Operating Panel** V471 Color: Beige Used between 1988 –1995 and 1996 – 1/98		NA
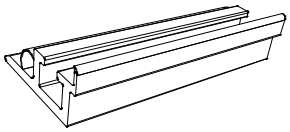	**Interlock, Stationary & Operating Panel** V755 Color: Beige Used between ’95 – ’96		NA Replace with V471, 472 747
	Panel Drip V800 150″ Used between 1991 – 1995. Current 5/98 to present.	BK BG	15978490 15978499
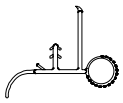	**Panel Drip** V760 Used between 1995 – 5/98.	BG	Check availability

OBSOLETE PANEL REPLACEMENT

ORDERING OBSOLETE REPLACEMENT PANELS FOR THE TRIMLINE PATIO DOOR

To order replacement panels specify:

1. OM of panel;
2. operator or stationary;
3. handing;
4. glazing;
5. finish.
6. Single−Point or Multi−Point.

CLAD AND WOOD TRIMLINE DOOR (PRE 1998)

CN	Panel OSM		Panel DLO	
	Width	Height	Width	Height
2665	28 15/16″	75 15/16″	24 7/16″	70 5/16″
3065	34 15/16″	75 15/16″	30 7/16″	70 5/16″
4065	46 15/16″	75 15/16″	42 7/16″	70 5/16″
2668	30 7/16″	79 3/16″	25 15/16″	73 9/16″
3068	36 7/16″	79 3/16″	31 15/16″	73 9/16″
4068	48 7/16″	79 3/16″	43 15/16″	73 9/16″
8/0 Height		95 3/16″	same as 6/8	89 9/16″

Units will have:
- 2 13/16″ top and bottom rail and 2 1/4″ stiles.
- Single Point Lock used until November 2002.
- DLO width same on 6/8 and 8/0.

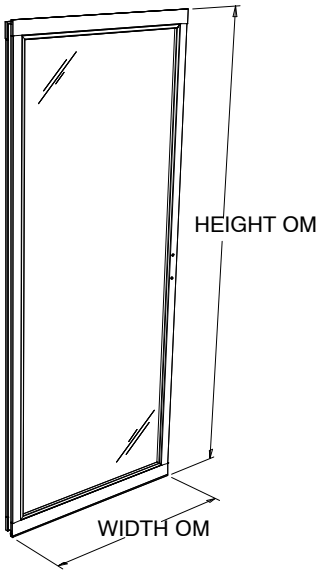

Wood Operator Panel
Exterior View

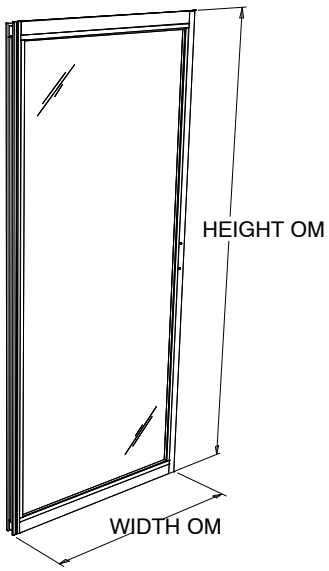

Clad Operator Panel
Exterior View

NOTE: Operator panel include sash rollers, panel drip, interlock and interlock end cap with gasket, and mortise lock (installed).
Stationary panel includes stationary panel top filler, leveling block filler, interlock and straight angle bracket (with screws taped to panel).