WOOD AND CLAD COMMERCIAL DOOR
WOOD AND CLAD 2 1/4″ COMMERCIAL DOOR

Table of Contents

	PAGE
History	2
Part Identification – Wood Commercial Door XX RHRA	3
Part Identification – Wood Commercial Door Stationary and Sidelite	4
Part Identification – Wood Commercial Door Direct Glaze Transom	5
Part Identification – Wood Commercial Door In–Sash Transom	6
Part Identification – Wood 2 1/4″ Commercial Door XX RHRA	7
Part Identification – Wood 2 1/4″ Commercial Door Stationary and Sidelite	8
Part Identification – Clad Commercial Door XX RHRA	9
Part Identification – Clad Commercial Door Stationary and Sidelite	10
Part Identification – Clad Commercial Door Direct Glaze Transom	11
Part Identification – Clad Commercial Door In–Sash Transom	12
Part Identification – Clad 2 1/4″ Commercial Door XX RHRA	13
Part Identification – Clad 2 1/4″ Commercial Door Stationary and Sidelite	14
Commercial Door Parts	15
Wood Replacement Parts	18
Replacement Sills	19
Door Hardware	20
Panel Replacement	21
Steel Frame Replacement	22
Weather Strip	23
Vinyl and Aluminum Replacement Parts	24
Obsolete Parts Panel Replacement and Weather Strip	25

ATTENTION:

- Specification and technical data are subject to change without notice.
- Numbers listed in parentheses ( ) are metric equivalents in millimeters rounded to the nearest whole number.

HISTORY

PRODUCED	UNIT TYPE	FEATURES OR CHANGES	DISCONTINUED
2000	Wood and Clad Light Commercial Prep Door Introduced	1/17/2000 Unit uses common parts with outswing door. Jambs square cut at bottom to accept commercial or ADA sills. Ball bearing 4″ butt hinges standard. 11 3/8″ bottom rail standard. 8/4/2000 Brushed chrome ball bearing hinges available.	2005
2005	Wood and Clad Commercial Door	Commercial Door is introduced, Outswing Light Commercial Door retired. New Commercial Door features 6″ stile, 11 3/8″ bottom rail, and 4 1/2″ ball bearing hinges.	Present
2006	Wood and Clad 2 1/4″ Commercial Door	2/2006 2 1/4″ Commercial Door is introduced.	Present
2007	Wood and Clad 2 1/4″ Commercial Door	2/20/07 Introduced raised and flat panels as a standard option for Marvin French Doors and Commercial Doors.	Present
2009	Wood and Clad 2 1/4″ Commercial Door	3/30/2009 Implemented design changes to the 2 1/4 Outswing. Changes include new panel seep, dust blocks, IZ3/IZ4 wood bead and shoot bolt reinforcement.	Present
2011	Wood and Clad 2 1/4″ Commercial Door	4/25/2011 White painted interior option introduced for all products.	Present
2011	Wood and Clad 2 1/4″ Commercial Door	4/25/2011 White painted interior option introduced for all products.	Present
2012	Wood and Clad 2 1/4″ Commercial Door	7/30/2012 Hardware rout options and hardware functions. New panel drip added. 10/29/2012 Interior Square Sticking/Glazing Bead option introduced. 12/17/2012 Introduced Clear Interior Finish option on all products.	Present
2013	Wood and Clad 2 1/4″ Commercial Door	4/29/2013 Introduced interior stain options. Stain colors are Wheat, Honey, Leather, Hazelnut, Cabernet and Espresso.	Present
2013	Wood and Clad 2 1/4″ Commercial Door	6/24/2013 Direct Glaze Standardization added upgrades and improvements to direct glaze products in both wood and clad. Glazing method is silicone and interior tape glazed. Wood bead profile is W11751.	Present

WOOD COMMERCIAL DOOR
XX RHRA

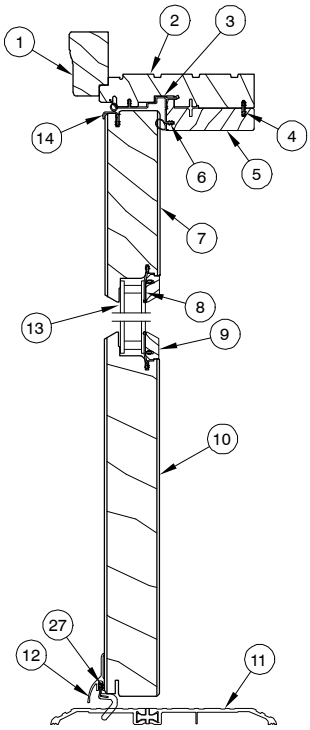

Head Jamb and Sill

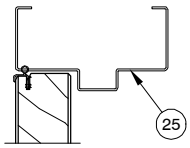

Steel Frame Option

1. Head Jamb Brick Mould Casing
2. Head Jamb
3. Head Jamb Weather Strip
4. Head Jamb Stop Connecting Barb
5. Head Jamb Stop
6. Head Jamb Stop Weather Strip
7. Top Rail
8. Glazing Bead
9. Glazing Cap
10. Bottom Rail
11. Sill
12. Panel Drip – A2408
13. Insulating Glass
14. Panel Cover Weather Strip
15. Jamb Brick Mould Casing
16. Jamb
17. 4 1/2″ x 4 1/2″ Ball Bearing Hinge
18. Stile
19. Locking Stile
20. Locking Stile Weather Strip
21. Jamb Stop Weather Strip
22. Connecting Barb
23. Jamb Stop
24. Jamb Weather Strip
25. Steel Frame
26. Hinge Stile Weather Strip
27. Frame Weather Strip – V1910

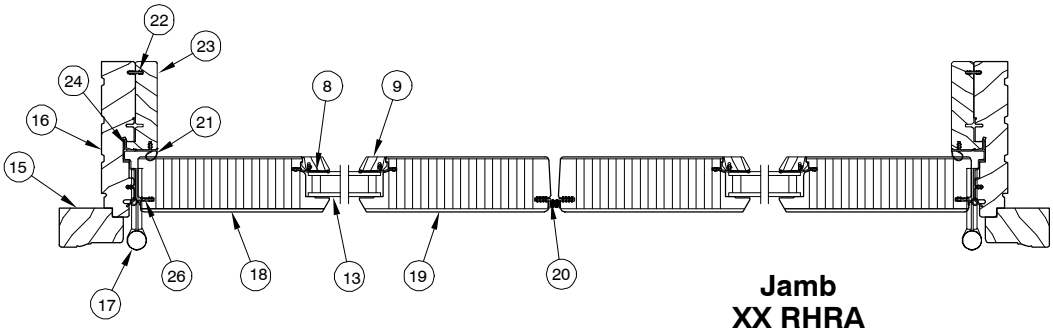

Jamb XX RHRA

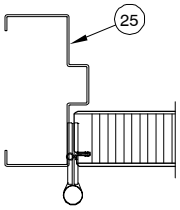

Steel Frame Option

NOTE: Not to scale; specifications subject to change without notice.

WOOD COMMERCIAL DOOR
STATIONARY AND SIDELITE

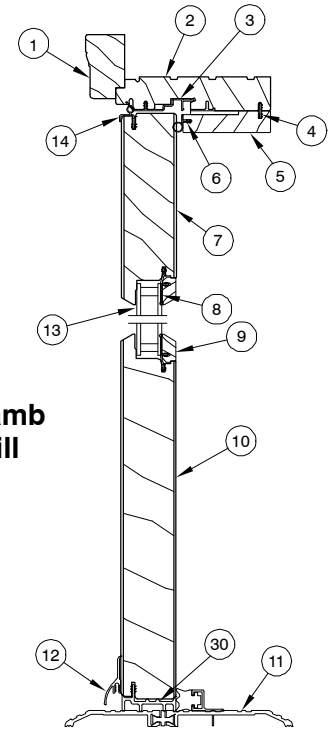

Head Jamb and Sill

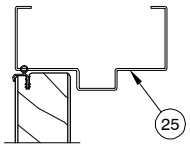

Steel Frame Option

1. Head Jamb Brick Mould Casing
2. Head Jamb
3. Head Jamb Weather Strip
4. Head Jamb Stop Connecting Barb
5. Head Jamb Stop
6. Head Jamb Stop Weather Strip
7. Top Rail
8. Glazing Bead
9. Glazing Cap
10. Bottom Rail
11. Sill
12. Panel Drip – A2408
13. Insulating Glass
14. Panel Cover Weather Strip
15. Jamb Brick Mould Casing
16. Jamb
17. Panel Spacer Tack
18. Stile
19. Locking Stile
20. Stile Weather Strip
21. Jamb Stop Weather Strip
22. Connecting Barb
23. Jamb Stop
24. Jamb Weather Strip
25. Steel Frame
26. Steel Frame Weather Strip
27. Astragal Base
28. Astragal
29. Astragal Weather Strip
30. Stationary Sweep

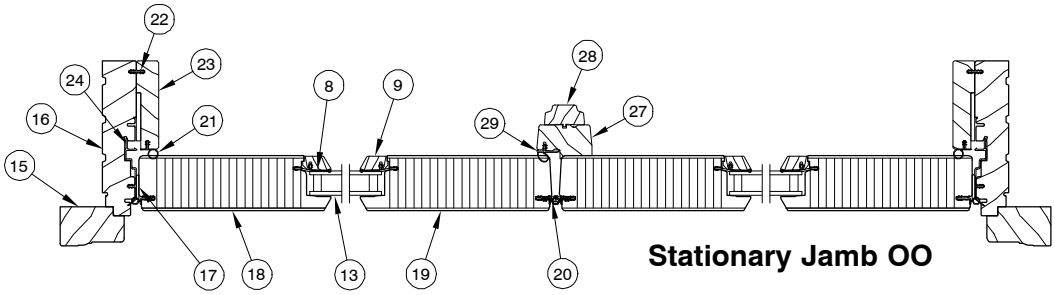

Stationary Jamb OO

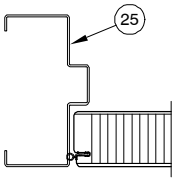

Steel Frame Option

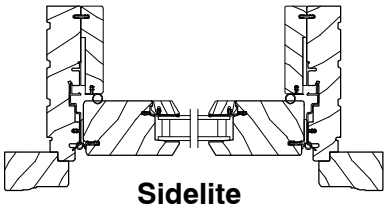

Sidelite Jamb O

NOTE: Not to scale; specifications subject to change without notice.

WOOD COMMERCIAL DOOR
DIRECT GLAZE TRANSOM

Head Jamb and Sill

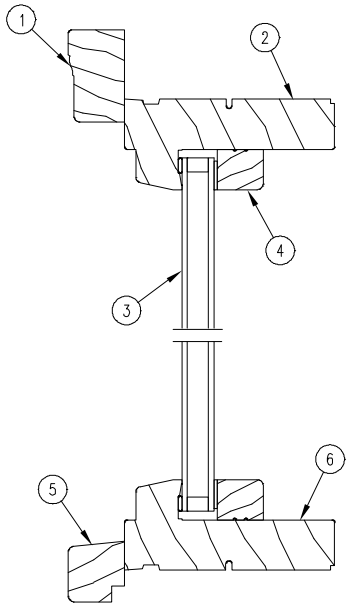

1. Head Jamb Brick Mould Casing
2. Head Jamb
3. Insulating Glass
4. Glazing Bead (W11751)
5. Sill Nose (W12032)
6. Sill
7. Jamb Brick Mould Casing
8. Jamb

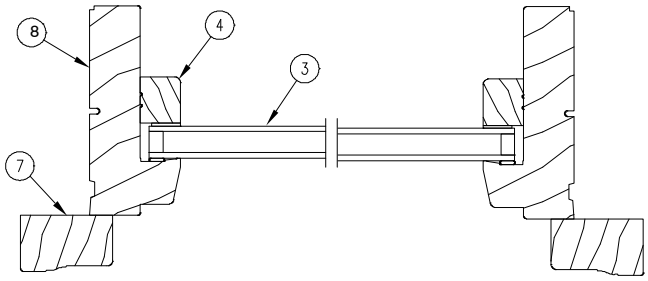

Jamb

NOTE: Not to scale; specifications subject to change without notice.

WOOD COMMERCIAL DOOR
IN–SASH TRANSOM

Head Jamb and Sill

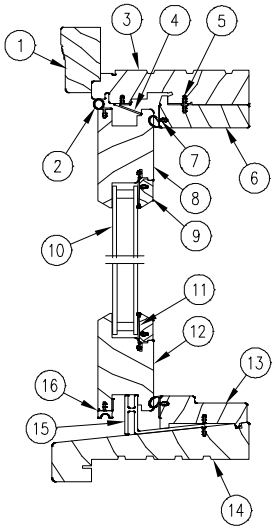

1. Head Jamb Brick Mould Casing
2. Top Rail Weather Strip
3. Head Jamb
4. Sash Retainer
5. Connecting Barb
6. Head Jamb Stop
7. Bulb Weather Strip
8. Top Rail
9. Rail Glazing Cap
10. Insulating Glass
11. Rail Glazing Bead
12. Bottom Rail
13. Sill Cover
14. Sill
15. Sill Leveling Block
16. Panel Drip
17. Jamb Brick Mould Casing
18. Jamb
19. Jamb Stop
20. Stile
21. Stile Glazing Cap
22. Stile Glazing Bead
23. Frame Weather Strip
24. Stile Weather Strip
25. Astragal
26. Astragal Base

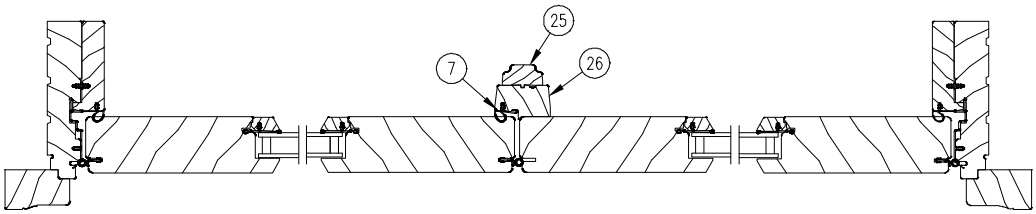

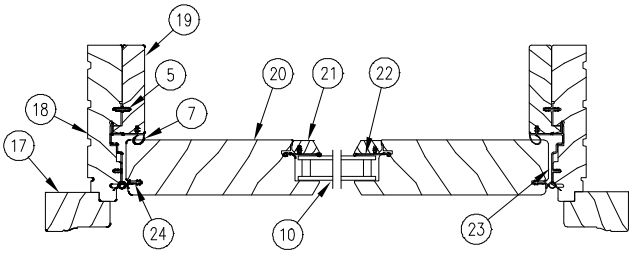

Jamb

NOTE: Not to scale; specifications subject to change without notice.

WOOD 2 1/4″ COMMERCIAL DOOR
XX RHRA

Head Jamb and Sill

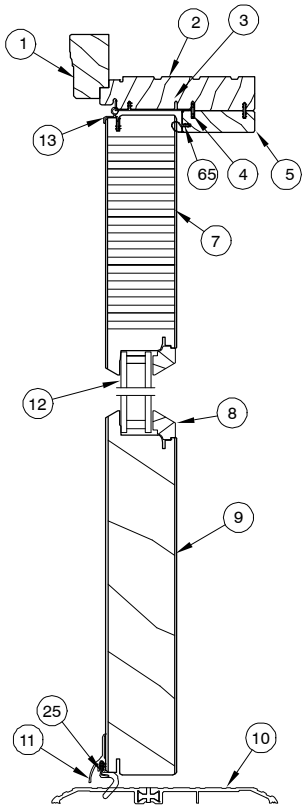

1. Head Jamb Brick Mould Casing
2. Head Jamb
3. Head Jamb Weather Strip
4. Head Jamb Stop Connecting Barb
5. Head Jamb Stop
6. Head Jamb Stop Weather Strip
7. Top Rail
8. Glazing Bead
9. Bottom Rail
10. Sill
11. Panel Drip – A2408
12. Insulating Glass
13. Panel Cover Weather Strip
14. Jamb Brick Mould Casing
15. Jamb
16. 4 1/2″ x 4 1/2″ Ball Bearing Hinge
17. Stile
18. Locking Stile
19. Locking Stile Weather Strip
20. Jamb Stop Weather Strip
21. Connecting Barb
22. Jamb Stop
23. Jamb Weather Strip
24. Hinge Stile Weather Strip
25. Frame Weather Strip – V1910

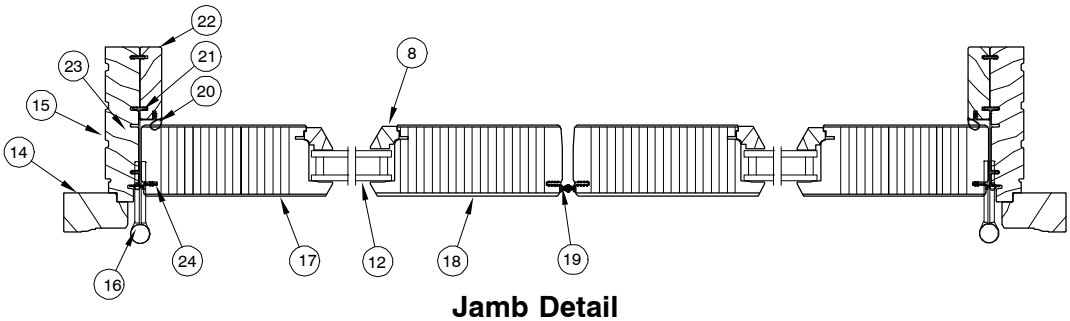

Jamb Detail
XX RHRA

NOTE: Not to scale; specifications subject to change without notice.

WOOD 2 1/4″ COMMERCIAL DOOR
STATIONARY AND SIDELITE

Head Jamb and Sill

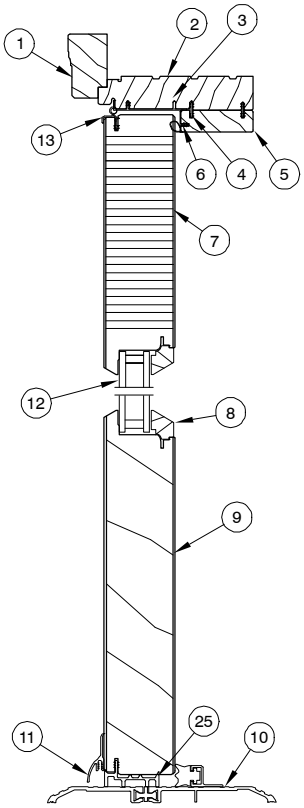

1. Head Jamb Brick Mould Casing
2. Head Jamb
3. Head Jamb Weather Strip
4. Head Jamb Stop Connecting Barb
5. Head Jamb Stop
6. Head Jamb Stop Weather Strip
7. Top Rail
8. Glazing Bead
9. Bottom Rail
10. Sill
11. Panel Drip – A2408
12. Insulating Glass
13. Panel Cover Weather Strip
14. Jamb Brick Mould Casing
15. Jamb
16. Panel Spacer Track
17. Stile
18. Locking Stile
19. Locking Stile Weather Strip
20. Jamb Stop Weather Strip
21. Connecting Barb
22. Jamb Stop
23. Jamb Weather Strip
24. Hinge Stile Weather Strip
25. Stationary Sweep

Jamb

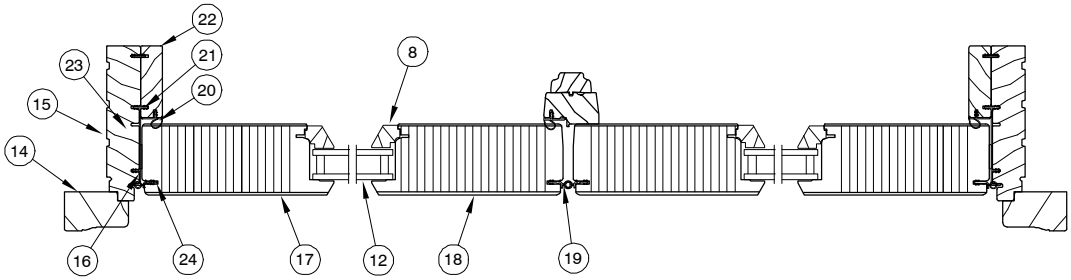

Stationary

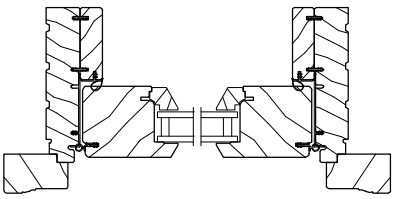

Sidelite

NOTE: Not to scale; specifications subject to change without notice.

CLAD COMMERCIAL DOOR
XX RHRA

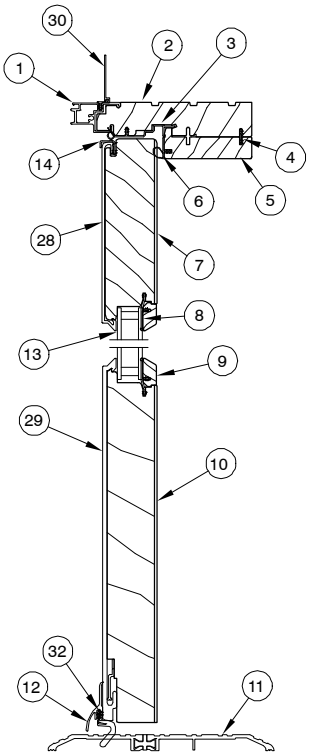

Head Jamb and Sill

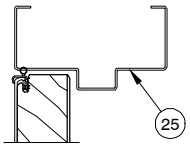

Steel Frame Option

1. Head Jamb Cladding
2. Head Jamb
3. Head Jamb Weather Strip
4. Head Jamb Stop Connecting Barb
5. Head Jamb Stop
6. Head Jamb Stop Weather Strip
7. Top Rail
8. Glazing Bead
9. Glazing Cap
10. Bottom Rail
11. Sill
12. Panel Drip – A2408
13. Insulating Glass
14. Panel Cover Weather Strip
15. Jamb Nailing Fin
16. Jamb
17. 4 1/2″ x 4 1/2″ Ball Bearing Hinge
18. Stile Cladding
19. Locking Stile Cladding
20. Locking Stile Weather Strip
21. Jamb Stop Weather Strip
22. Connecting Barb
23. Jamb Stop
24. Jamb Weather Strip
25. Steel Frame
26. Locking Stile
27. Stile
28. Top Rail Cladding
29. Bottom Rail Cladding
30. Head Jamb Nailing Fin/Drip Cap
31. Hinge Stile Weather Strip
32. Frame Weather Strip – V1910

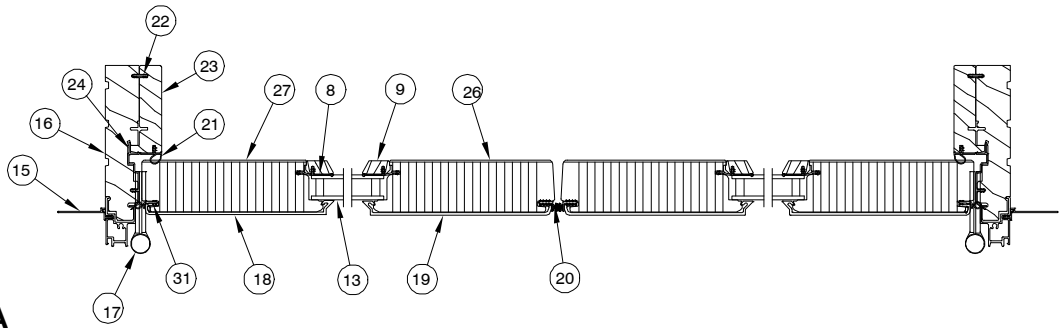

Jamb – XX RHRA

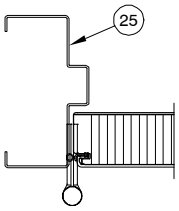

Steel Frame Option

NOTE: Not to scale; specifications subject to change without notice.

CLAD COMMERCIAL DOOR
STATIONARY AND SIDELITE

Head Jamb and Sill

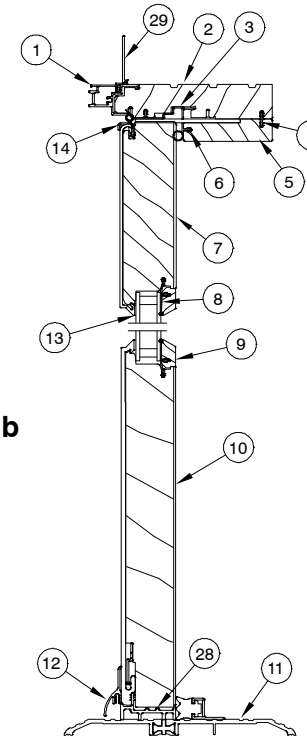

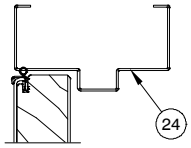

1. Head Jamb Cladding
2. Head Jamb
3. Head Jamb Weather Strip
4. Head Jamb Stop Connecting Barb
5. Head Jamb Stop
6. Head Jamb Stop Weather Strip
7. Top Rail
8. Glazing Bead
9. Glazing Cap
10. Bottom Rail
11. Sill
12. Panel Drip – A2408
13. Insulating Glass
14. Panel Cover Weather Strip
15. Nailing Fin
16. Jamb
17. Panel Spacer Track
18. Stile Cladding
19. Locking Stile Cladding
20. Locking Stile Weather Strip
21. Jamb Stop Weather Strip
22. Connecting Barb
23. Jamb Stop
24. Steel Frame
25. Astragal
26. Astragal Base
27. Astragal Weather Strip
28. Stationary Sweep
29. Head Jamb Nailing Fin/Drip Cap

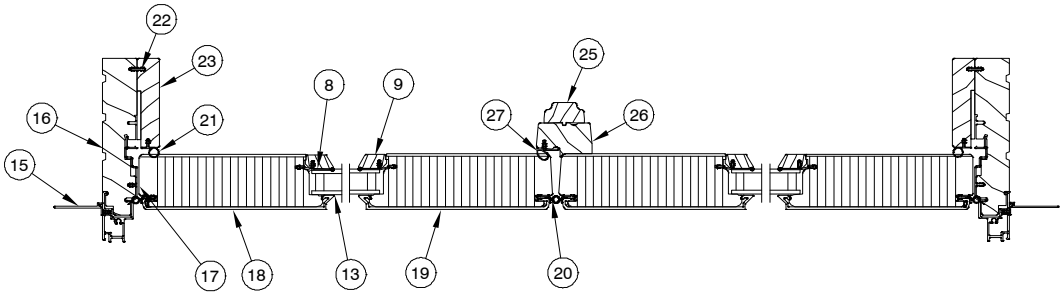

Stationary

Jamb

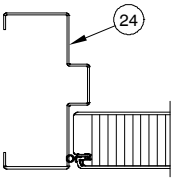

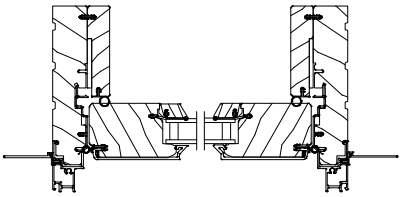

Sidelite

NOTE: Not to scale; specifications subject to change without notice.

CLAD COMMERCIAL DOOR
DIRECT GLAZE TRANSOM

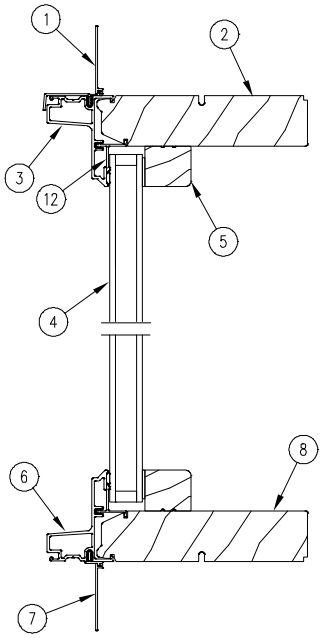

Head Jamb and Sill

1. Head Jamb Nail Fin/Drip Cap
2. Head Jamb
3. Head Jamb Cladding
4. Insulating Glass
5. Glazing Bead (W11751)
6. Sill Cladding
7. Sill Nailing Fin
8. Sill
9. Jamb Cladding
10. Jamb Nailing Fin
11. Jamb
12. Attachment Barb

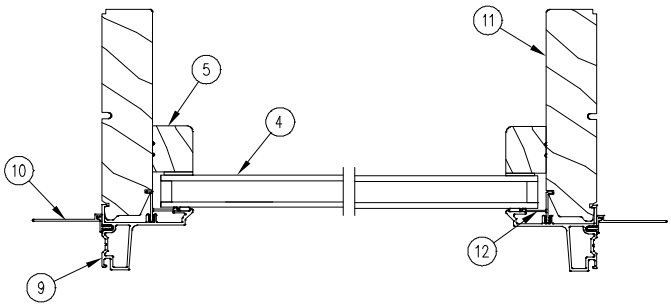

Jamb

NOTE: Not to scale; specifications subject to change without notice.

CLAD COMMERCIAL DOOR
IN–SASH TRANSOM

Head Jamb and Sill

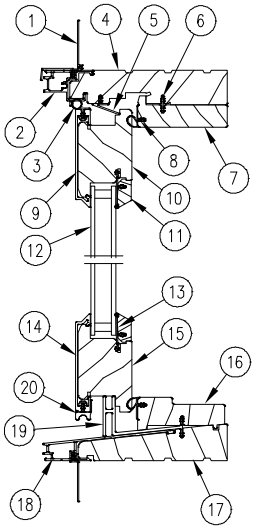

1. Head Jamb Nail Fin/Drip Cap
2. Head Jamb Cladding
3. Top Rail Weather Strip
4. Head Jamb
5. Sash Retainer
6. Connecting Barb
7. Head Jamb Stop
8. Bulb Weather Strip
9. Top Rail Cladding
10. Top Rail
11. Rail Glazing Cap
12. Insulating Glass
13. Rail Glazing Bead
14. Bottom Rail Cladding
15. Bottom Rail
16. Sill Cover
17. Sill
18. Sill Cladding
19. Sill Leveling Block
20. Panel Drip
21. Jamb Nailing Fin
22. Jamb
23. Jamb Cladding
24. Jamb Stop
25. Stile
26. Stile Glazing Cap
27. Stile Glazing Bead
28. Frame Weather Strip
29. Stile Weather Strip
30. Stile Cladding
31. Astragal
32. Astragal Base

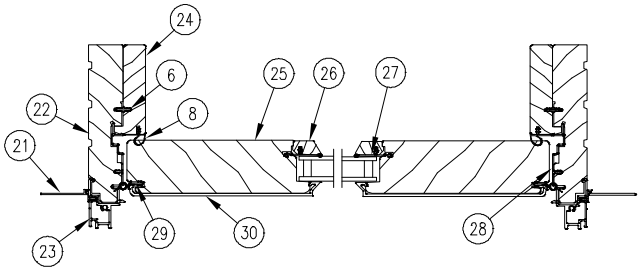

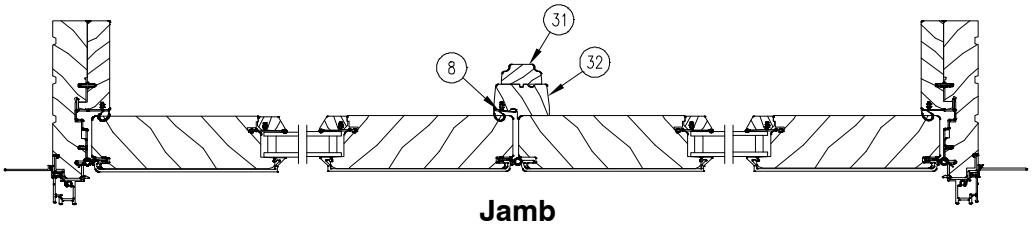

Jamb

NOTE: Not to scale; specifications subject to change without notice.

CLAD 2 1/4″ COMMERCIAL DOOR
XX RHRA

Head Jamb and Sill

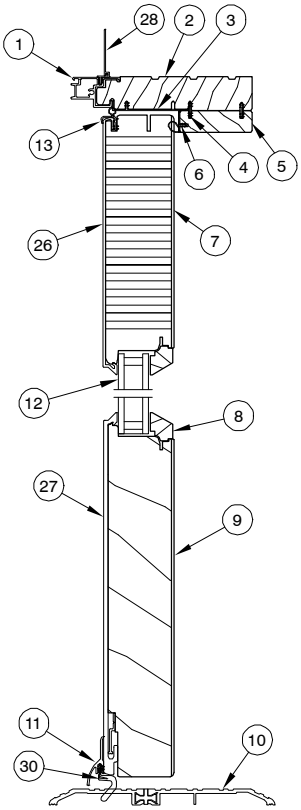

1. Head Jamb Cladding
2. Head Jamb
3. Head Jamb Weather Strip
4. Head Jamb Stop Connecting Barb
5. Head Jamb Stop
6. Head Jamb Stop Weather Strip
7. Top Rail
8. Glazing Bead
9. Bottom Rail
10. Sill
11. Panel Drip – A2408
12. Insulating Glass
13. Panel Cover Weather Strip
14. Jamb Nailing Fin
15. Jamb
16. 4 1/2″ x 4 1/2″ Ball Bearing Hinge
17. Stile Cladding
18. Locking Stile Cladding
19. Locking Stile Weather Strip
20. Jamb Stop Weather Strip
21. Connecting Barb
22. Jamb Stop
23. Jamb Weather Strip
24. Locking Stile
25. Stile
26. Top Rail Cladding
27. Bottom Rail Cladding
28. Head Jamb Nailing Fin/Drip Cap
29. Stile Weather Strip
30. Frame Weather Strip – V1910

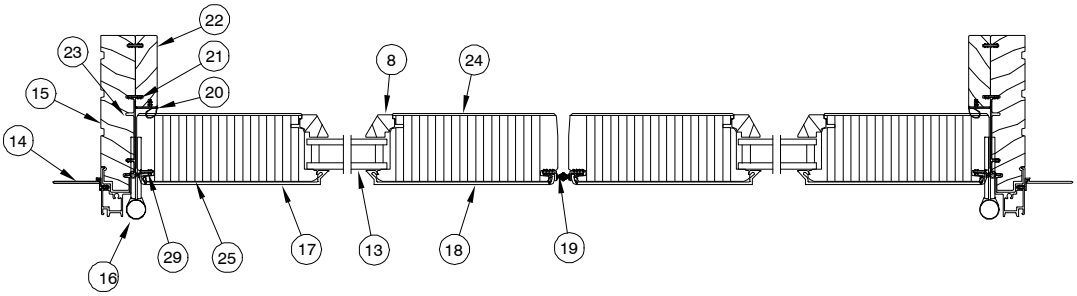

Jamb – XX RHRA

NOTE: Not to scale; specifications subject to change without notice.

CLAD 2 1/4″ COMMERCIAL DOOR
STATIONARY AND SIDELITE

Head Jamb and Sill

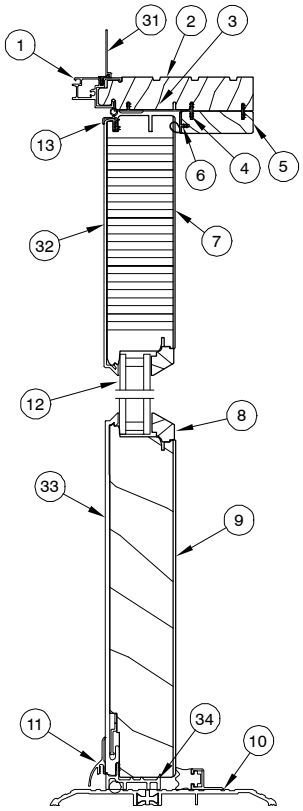

1. Head Jamb Cladding
2. Head Jamb
3. Head Jamb Weather Strip
4. Head Jamb Stop Connecting Barb
5. Head Jamb Stop
6. Head Jamb Stop Weather Strip
7. Top Rail
8. Glazing Bead
9. Bottom Rail
10. Sill
11. Panel Drip – A2408
12. Insulating Glass
13. Panel Cover Weather Strip
14. Jamb Cladding
15. Jamb
16. Panel Spacer Track
17. Stile Cladding
18. Locking Stile Cladding
19. Locking Stile Weather Strip
20. Jamb Stop Weather Strip
21. Connecting Barb
22. Jamb Stop
23. Jamb Weather Strip
24. Astragal
25. Astragal Base
26. Astragal Weather Strip
27. Locking Stile
28. Stile
29. Stile Weather Strip
30. Jamb Nailing Fin
31. Head Jamb Nailing Fin
32. Top Rail Cladding
33. Bottom Rail Cladding
34. Stationary Sweep

Jamb

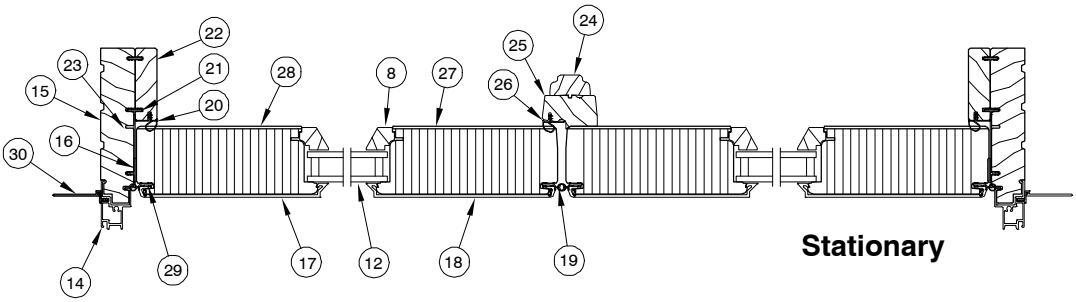

Stationary

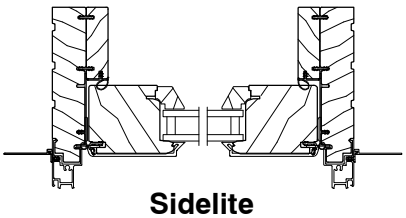

Sidelite

NOTE: Not to scale; specifications subject to change without notice.

PARTS

ILLUSTRATION *NOT TO SCALE*	DESCRIPTION
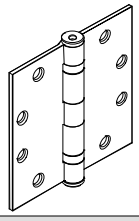	**Hinge, 4 1/2″ X 4 1/2″ Ball Bearing** *Includes:* *1 – Hinge* *6 – #12x1″Phillips flat head wood screws* *2 – #12x2 1/2″Phillips flat head screws* NOTE: Hinge color/part number includes the color matched screws. If you need to order the screws separately, they are listed below aligned with the corresponding hinge color.

SCREW DESCRIPTION	HINGE COLOR/PART NO.		SCREW COLOR/PART NO.	
6 – #12x1″Phillips flat head wood screws (SC=US26D) (BZ=US10A) (BS=US3) (SS=US32D)	SS SC brass BZ brass BS brass	02100162 02101166 02101167 02101165	SS SS DKBZ BS	02056069 02056069 02056010 02056068
2 – #12x2 1/2″Phillips flat head screws (SC=US26D) (BZ=US10A) (BS=US3) (SS=US32D)	SS SC brass BZ brass BS brass	02100162 02101166 02101167 02101165	SS SS DKBZ BS	02010311 02010311 02056067 02010310

ILLUSTRATION *NOT TO SCALE*	DESCRIPTION	LENGTH/COLOR	PART NO.
	Head or Foot Flush Bolt – Inactive Panel	BK	11101780
	Cover Plate for Flush Bolt *Includes:* *1 – Cover plate* *2 – #8 x 1″ Screws (11800645)*	ALUMINUM BS AB PVD	11860402 NA NA NA
	Inactive Panel Locking Rod Assembly Top or Bottom Flush Bolt (XX) Includes: *1 – Locking rod with end bolt* **Height** — **Top Locking Rod Length** CN 7–0 ht — 11″ CN 8–0 ht — 27″ CN 10–0 ht* — 51″ **Bottom Locking Rod Length** 11″	SS SS	05700180 05700185 05700196 10815178
	Kick Plate Includes: *16 – #6 x 5/8″ truss head SMS screws* *SS=US32D* *BZ=US10B* *BS=US4*	3–0/ SS 3–0/ BS 3–0/ BZ 3–6/ SS 3–6/ BS 3–6/ BZ 4–0/ SS 4–0/ BS 4–0/ BZ	10148094 10148095 10148096 18900457 18900453 18900455 18900452 18900454 18900456
	End Bolt Guide Inactive Panels Includes: *1 – End Bolt guide* *1 – #8x1 1/2″ Phillips pan head wood screw (11865159)*		10815199
	Strike Plate, Head Jamb Includes: *1 – Strike plate* *2 – #8 x 1″ Phillips trusshead wood screws head jamb) (11800815)* *2 – #8x3″trusshead SS screw (11800832)*	BG BZ	05700315 05700316
	Head Jamb Spacer Tack; Stationary Panel		11860424
	Jamb Spacer Tack; Stationary Panel 3/4″ Diameter Head		11860423
	Stationary Bracket For 1 3/4″ Door Includes: *3 – #8 x 1″ flat head screws (11800645)*		11100212

* 10–0 height available for 2 1/4″ Commercial Door only.

PARTS

ILLUSTRATION *NOT TO SCALE*	DESCRIPTION	OPER./COLOR	PART NO.
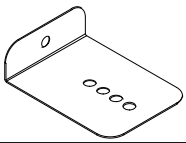	**Stationary Bottom Bracket** For 1 3/4″ and 2 1/4″ Door Includes: *1 – #8 x 1 1/2″ pan head screw (11865159)* *1 – #6 x 1/4″ pan head screw (02056061)*		02101168
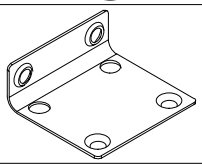	**Stationary Bracket, Jamb/Head Jamb** For 2 1/4″ Door Includes: *4 – #8 x 1″ flat head screws (11800645)* *2 – #7 x 3/4″ flat head screws (11800760)*		02101169
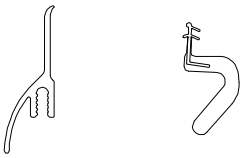	**Pkg, Panel Drip** July 30, 2012 – Present Includes: *A2408 Panel Drip* *V1910 Weather Strip* *#6 x 1 1/4″ flat head screws*		
	1–6	Beige	11100260
		Bronze	11100264
		Clear	11100268
	3–0	Beige	11100261
		Bronze	11100265
		Clear	11100269
	3–6	Beige	11100262
		Bronze	11100266
		Clear	11100270
	4–0	Beige	11100263
		Bronze	11100267
		Clear	11100271
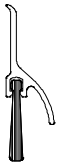	**Commercial Door Panel Sweep** Pre–July 30, 2012		
	1–6	Mill Finish	18451216
		Dk Bronze	18451316
		Gold	18451416
	3–0	Mill Finish	18450139
		Dk Bronze	18450140
		Gold	18451430
	3–6	Mill Finish	18451236
		Dk Bronze	18451336
		Gold	18451436
	4–0	Mill Finish	18451240
		Dk Bronze	18451340
		Gold	18451440
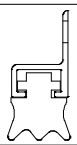	**Gasket Stop** Stationary Door 185″	Mill Finish Dk Bronze Gold	18450503 18450501 18450502
	Fastener, Gasket Stop #6 x 1/4″ Phillips PH screw	Mill Finish Dk Bronze Brass	02056061 02056062 02056063
	Fastener, Panel Drip #6 x 1 1/4″ Phillips PH screw	Mill Finish Dk Bronze Beige	02056064 02056065 02056070

WOOD PARTS

CURRENT REPLACEMENT PARTS

COMMERCIAL DOOR

	Wood	Clad
First Mull Casing and Astragal	W1455	
Astragal Cover and Transom Mull Cover	W7554	
Sill Nosing – Transom	W12032	
Sill Nosing – Transom (total R.O. continuous casing)	W12031	
Sill Nosing – Transom (used prior to June 24, 2013)	W8653	
Head Jamb / Jamb Part Stop – Operator and In–Sash Transom	W6000	W6000
Head Jamb / Jamb Part Stop – 2 1/4″ Door	W10401	W10401
Sill Cover – In–Sash Transom	W2136	W2136
Head Jamb / Jamb Part Stop –Stationary 1 ¾″	W9475	W9475

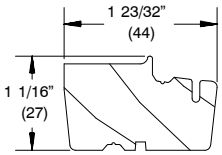

W1455

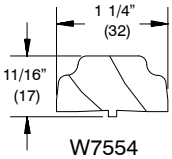

W7554

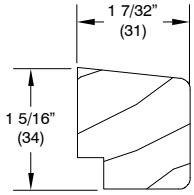

W12032

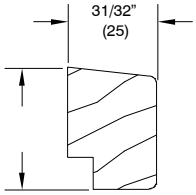

W12031

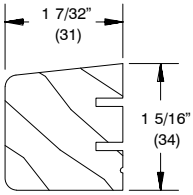

W8653
Used prior to
June 24, 2013

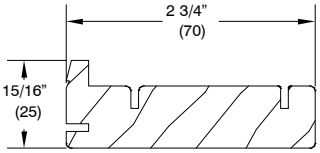

W6000

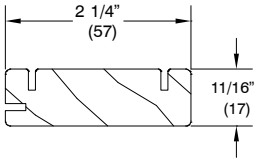

W10401

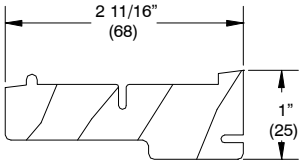

W2136

TO ORDER REPLACEMENT PARTS

When ordering replacement wood parts specify:

1. profile number;
2. rough opening;
3. handing;
4. length;
5. finish.

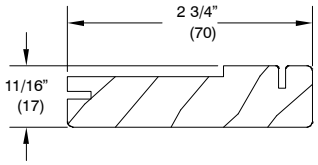

W9475

REPLACEMENT SILLS

ORDERING REPLACEMENT PEMKO LOW PROFILE SILLS FOR THE COMMERCIAL DOOR AND 2 1/4″ COMMERCIAL DOOR

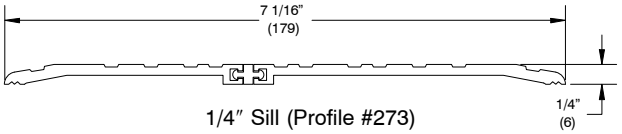

1/4″ Sill (Profile #273)

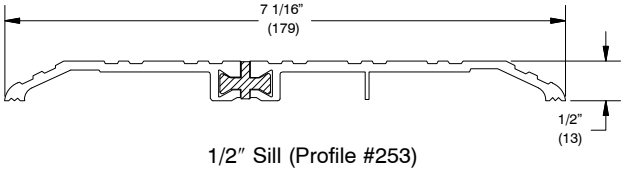

1/2″ Sill (Profile #253)

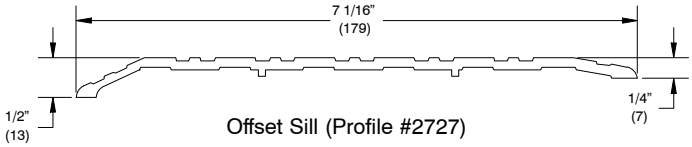

Offset Sill (Profile #2727)

TO ORDER REPLACEMENT PEMKO LOW PROFILE SILLS

When ordering replacement sills, specify:

1. 1/4″, 1/2″, or offset;
2. wood, wood/clad, or steel frame;
3. rough opening;
4. length;
5. handing;
6. finish;
7. Foot bolt (where applicable).

REPLACEMENT DOOR HARDWARE

THE FOLLOWING REPLACEMENT PARTS ARE TO BE ORDERED THROUGH MQS – CONFIGURED PARTS

When ordering replacement parts, specify:

1. type of units;
2. description;
3. finish.

ILLUSTRATION *NOT TO SCALE*	DESCRIPTION
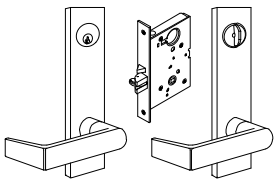	**Schalge L Series Mortise Lock w/06 Lever** *"L" Escutcheon and Strike: Entrance (L9453)* *Keyed Exterior* *Interior with Thumb Turn*
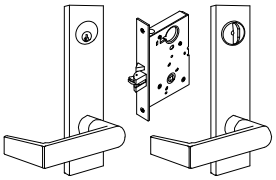	**Schlage L Series Mortise Lock w/06 Lever** *"L" Escutcheon and Strike: Corridor* *Keyed Exterior* *Interior with no Thumb Turn*
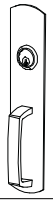	**Dummy Trim Night Latch Von Duprin (98–990–NL)** *Rigid lever – key retracts latch bolt*
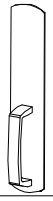	**Dummy Trim Von Duprin (98–990–DT)** *Rigid lever for pull operation*
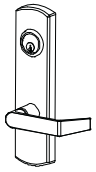	**Lever Night Latch Von Duprin (98–996L–NL)** *Rigid lever – key retracts latch bolt*
	Lever, Dummy Trim Von Duprin (98–996L–DT) *Rigid lever for pull operation*
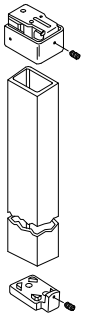	**Removable Mullion** *Keyed* *(AL=SP28)* *(BZ=SP313)* **Removable Mullion** *Non–Keyed* *(AL=SP28)* *(BZ=SP313)*

ILLUSTRATION *NOT TO SCALE*	DESCRIPTION
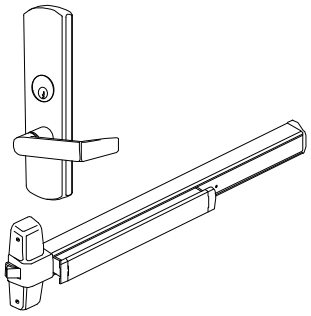	**Rim (Panic) Device, Lever** ***Von Duprin 98 L*** *(SC=US26D)* *(BZ=313AN)* *(BS=US3)*
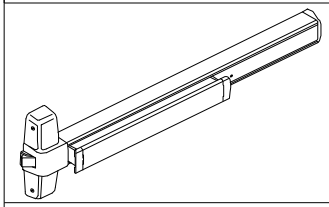	**Rim (Panic) Device, Exit Only** ***Von Duprin 98 EO*** *(SC=US26D)* *(BZ=313AN)* *(BS=US3)*
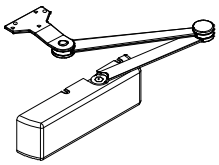	**Closer, 2 1/4″ Door** *LCN4041* *(AL=BHMA689)* *(BZ=BHMA695)* *(BS=BHMA696)*
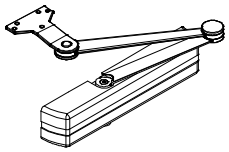	**Closer, 1 3/4″ Door** *LCN1461* *(AL=BHMA689)* *(BZ=BHMA695)* *(BS=BHMA696)*

PANEL REPLACEMENT

ORDERING REPLACEMENT PANELS FOR THE WOOD AND CLAD COMMERCIAL DOOR

To order replacement panels specify:

1. OM of panel;
   NOTE: OM of panel does not include astragal or sweep.
2. Active or Stationary
   a. Active – specify no lock, no bore or model of hardware to be applied.
   b. Stationary – specify configuration and astragal (if applicable).
3. Handing;
4. Glazing;
5. Finish;
6. Route for hinges;
7. Intermediate Rail (if applicable).
8. Glazing Bead Profile
   a. Bevel
   b. Square

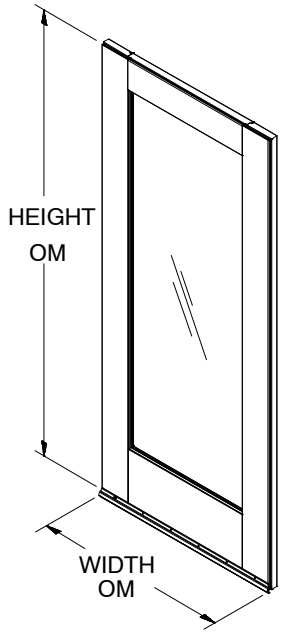

Wood or Clad Panel

NOTE: Weather strip is included with all panels (where applicable).

Active panels include panel sweep, no lock, no bore and/or specifications from list above.

Stationary 1 wide panels include panel sweep.

Stationary 2 wide panels include panel sweep and astragal.

STEEL FRAME REPLACEMENT

ORDERING REPLACEMENT STEEL FRAME FOR THE WOOD AND CLAD COMMERCIAL DOOR

When ordering replacement steel frame, specify:

1. Frame depth (4 3/4″, 5 3/4″, 6 3/4″, 7 3/4″);
2. Set up and Welded, or KD;
3. Existing opening (or specify wood stud, metal stud, or masonry installation);
4. CN size;
5. Handing.

Steel Frame Fastening Options

Butt Installation
5 3/4″ Frame Width
New Construction

Butt Installation
4 3/4″ Frame Width
Existing Opening

Block Wall

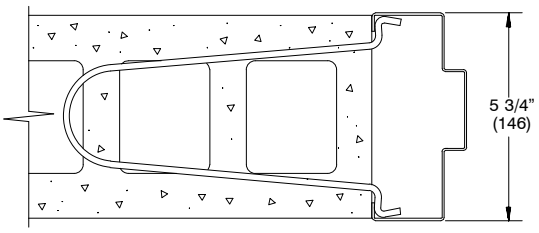

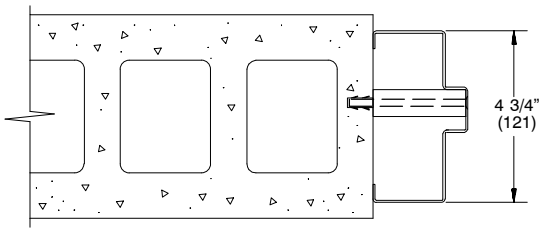

Wrap Mount
5 3/4″ Frame Width
New Construction

2x4 Wood Stud Wall

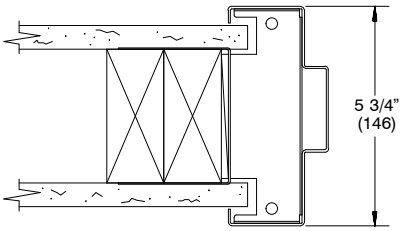

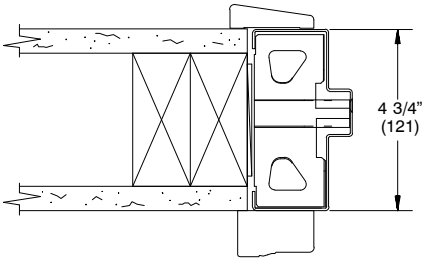

2x3.5 Steel Stud Wall

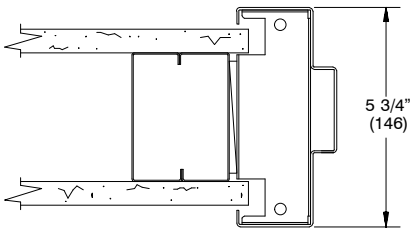

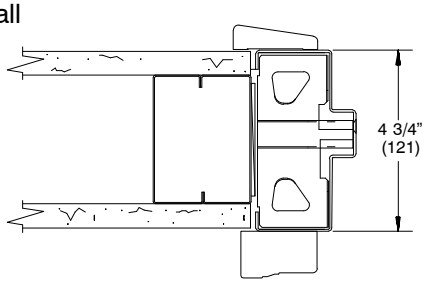

WEATHER STRIP

COMMERCIAL DOOR

When ordering replacement Weather Strip specify:

1. quantity;
2. length;
3. part number;
4. description.

ILLUSTRATION *NOT TO SCALE*	DESCRIPTION	LENGTH	OPER./COLOR	PART NUMBER
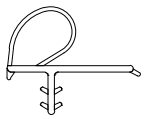	**Offset Bulb Weather Strip, Parting Stop, Frame, Mull Casing, Transom and Astragal** V796	41 1/4″ 92 7/8″ 92 7/8″ 164 13/16″	BG BG BK BG	15171136 15170082 15170083 15172140
	Weather Strip, Jamb Stile V020	79 9/16″ 92 15/16″ 150″ 150″	BG BG BG BK	11197968 11197982 11197999 11197998
	Weather Strip, Frame V017 1 3/4″ Door only	41 5/16″ 80 5/8″ 94 1/8″ 164 7/8″ 164 7/8″	BG BG BG BG BK	11197536 11198668 11198682 11197596 11197598
	Pile Weather Strip, Locking Stile V2363	Specify Length	GY	15170998
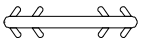	**Connecting Barb** V803 NOTE: Color may vary depending on current stock.	Specify Length		15812999
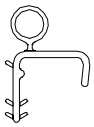	**Weather Strip, Panel Cover** V018	150″ 150″	BG BK	11197799 11197798
	Weather Strip, Frame V1707 2 1/4″ Commercial Door	120″ 120″	BG BK	11191299 11191399
	Bulb Weather Strip, In–Sash Transom Top Rail V192	84″ 192″ 192″	BG BG BK	15900058 15900118 15900117

REPLACEMENT VINYL OR ALUMINUM PARTS

ORDERING REPLACEMENT VINYL OR ALUMINUM PARTS FOR THE COMMERCIAL DOOR

	Wood	Clad
Sash Retainer (In–Sash Transom) – Beige or Black	V026	V026
Sill Leveling Block (In–Sash Transom) – Beige or Black	V027	V027
Panel Drip (In–Sash Transom) – Beige or Black	V800	V800
Panel Drip (Active and Stationary Panels)	A2408	A2408
Frame Weather Strip (Active Panels)	V1910	V1910
Sweep, Stationary (Stationary Panels) 3/8″ (for use with 1/2″ and offset sill) 5/8″ (for use with 1/4″ sill)	V779	V779

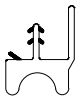

V800 – Panel Drip

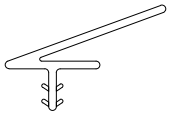

V026 – Sash Retainer

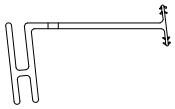

V027 – Sill Leveling Block

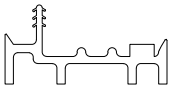

V779 –Sweep, Stationary

A2408 – Panel Drip

V1910 – Frame Weather Strip

TO ORDER REPLACEMENT PARTS

When ordering replacement parts specify:

1. profile number;
2. rough opening;
3. length;
4. handing;
5. finish/color (where applicable).

OBSOLETE PARTS

OBSOLETE PARTS

ILLUSTRATION *NOT TO SCALE*	DESCRIPTION	OPER./COLOR	PART NO.
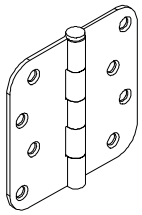	**Hinge, Ball Bearing** *Outswing Light Commercial Door retired 2005* Includes: 1 – Ball bearing hinge *8 – #12 x 1 1/4″ Phillips flathead wood screws*	Solid Brass Satin Chrome	02100578 02100579
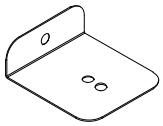	**Stationary Bottom Bracket** 1 3/4″ Commercial Door Includes: *2 – #6 x 1/4″ pan head screws* *1 – #8 x 1 1/2″ pan head screw*		11100211
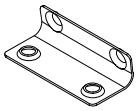	**Stationary Bracket** For 1 3/4″ Door Includes: *4 – #7 x 3/4″ flat head screws (11800760)*		11100209

OBSOLETE PARTS PANELS WEATHER STRIP

OBSOLETE REPLACEMENT PARTS

COMMERCIAL DOOR

	Wood	Clad
Head Jamb / Jamb Part Stop – 2 1/4″ Door	W8986	W8986

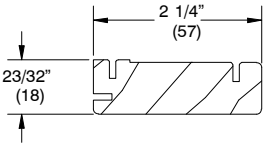

W8986 – Head Jamb / Jamb Stop – 2 1/4″ Door

TO ORDER OBSOLETE REPLACEMENT PARTS

When ordering replacement wood parts specify:

1. profile number;
2. rough opening;
3. handing;
4. length;
5. finish.

ORDERING REPLACEMENT PANELS FOR THE WOOD AND CLAD LIGHT COMMERCIAL PREP DOOR

Wood and Clad Outswing Light Commercial Prep Door 2000 – 2005

To order replacement panels specify:

1. Wood or Clad;
2. size (call number or OM of panel);
3. active, inactive or stationary;
   a. specify bore or no bore
4. handing;
5. glazing;
6. finish.

ORDERING OBSOLETE WEATHER STRIP FOR THE COMMERCIAL DOOR

When ordering replacement weather Strip specify:

1. quantity;
2. length;
3. part number;
4. description.

ILLUSTRATION *NOT TO SCALE*	DESCRIPTION	LENGTH	OPER./COLOR	PART NUMBER
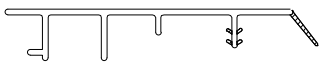	**Weather Strip, Frame** V1296 2 1/4″ Commercial Door	120″ 120″	BG BK	11199120 11199121