Marvin Interior Shades
Sliding Door Finishing Instruction

ABSTRACT: The following instruction is to demonstrate how to remove the sliding door shade for finishing.

NOTE: Shades are for use only in connection with Marvin® brand windows and doors. Shades are not covered under warranty if used with Integrity®, Infinity®, or any third party manufacturer's product.

WARNING

Always practice safety! Wear the appropriate eye, ear and hand protection, especially when working with power tools.

You Will Need to Supply	
Flathead screwdriver	Phillips screwdriver
Allen wrench (small)	Rubber mallet

Operator Panel Interior Shade Removal

1. Compress interior shades fully on both the operator and stationary panels.

2. Remove the pocket cover(s) and the meeting stile cover by gently prying from frame (the cover is barbed to frame). See figure 1.

Figure 1

Tip

Loosen the top or bottom quarter turn connectors. This will temporarily take tension off the top or bottom cords.

3. At sill, remove #6 x 1" flathead screw and slide cord tensioner out. See figure 2.

Figure 2

4. At header remove #6 x 1" flathead screw and slide cord tensioner out. See figure 3.

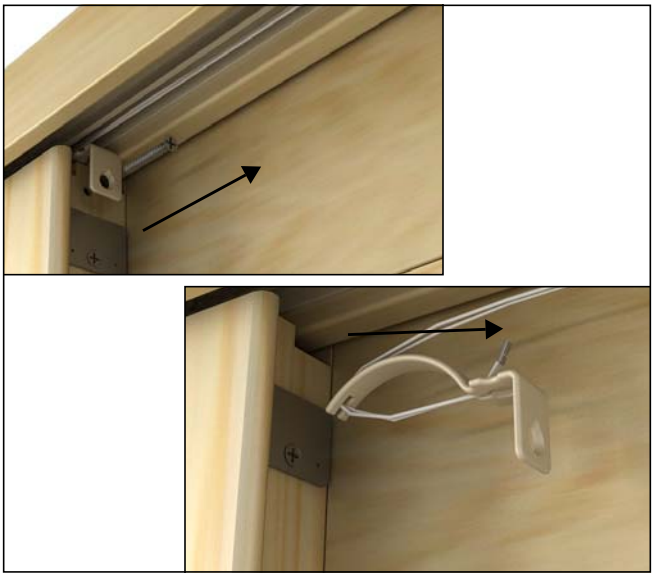

Figure 3

5. Use a small allen wrench to remove fabric adapter from meeting stile extension via the quarter turn connector on the top and bottom. See figure 4.

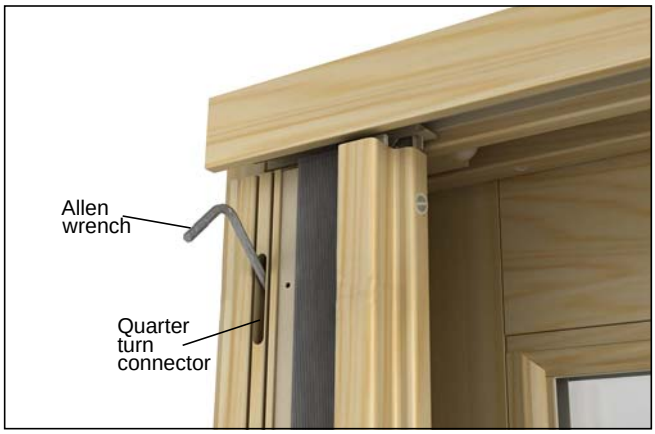

Figure 4

6. Rotate operator interior shade cartridge out of the track. See figure 5.

Figure 5

IMPORTANT

Do not tangle cords, they should be kept straight at all times.

7. Remove pull bar from shade cartridge by removing the screws from the back side. See figure 6. Finish pull bar as desired.

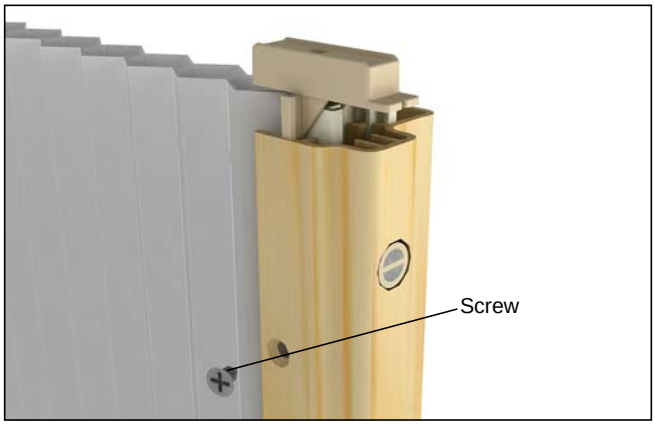

Figure 6

Stationary Panel Shade Removal

1. Using a flathead screwdriver, remove the header and sill guide tracks in front of the operator panel (or interlocking stationary panel for a 3 wide OOX/XOO). See figure 7.

Figure 7

Tip

Loosen the top or bottom quarter turn connector. This will temporarily take tension off of the top or bottom cords.

2. Remove the terminal ring to the header guide using the #6 x 1/4" pan head screw. See figure 8a. Remove the terminal ring to the sill guide using the #6 x 1/4" pan head screw. See figure 8b.

Figure 8

3. Use a small allen wrench to remove fabric adapter from stationary jamb extension via the quarter turn connector on bottom and top. See figure 9.

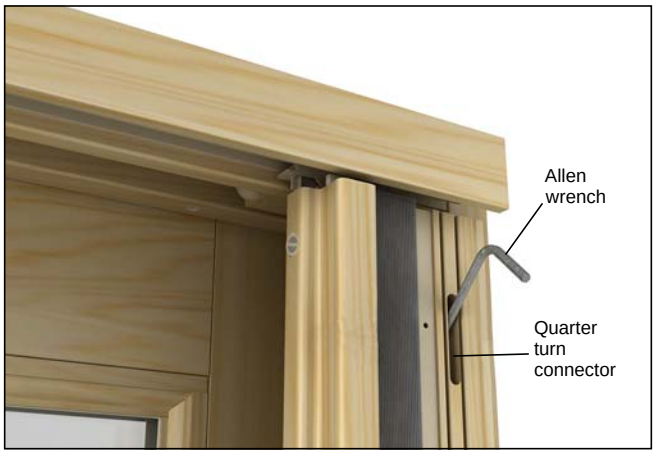

Figure 9

4. Rotate stationary interior shade cartridge out of track. See figure 10.

Figure 10

5. Remove pull bar from shade cartridge by removing the screws from the back side. See figure 11. Finish pull bar as desired.

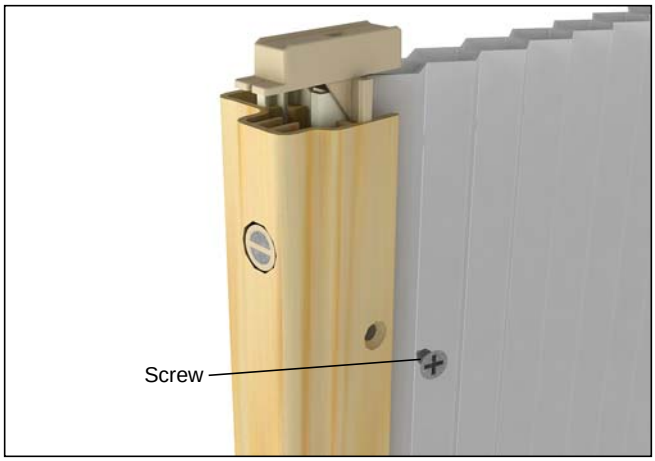

Figure 11